MAKING MODERN LIVING POSSIBLE

Parts Manual

Open Circuit Pumps
Series 45 Frame J 45-75 cc

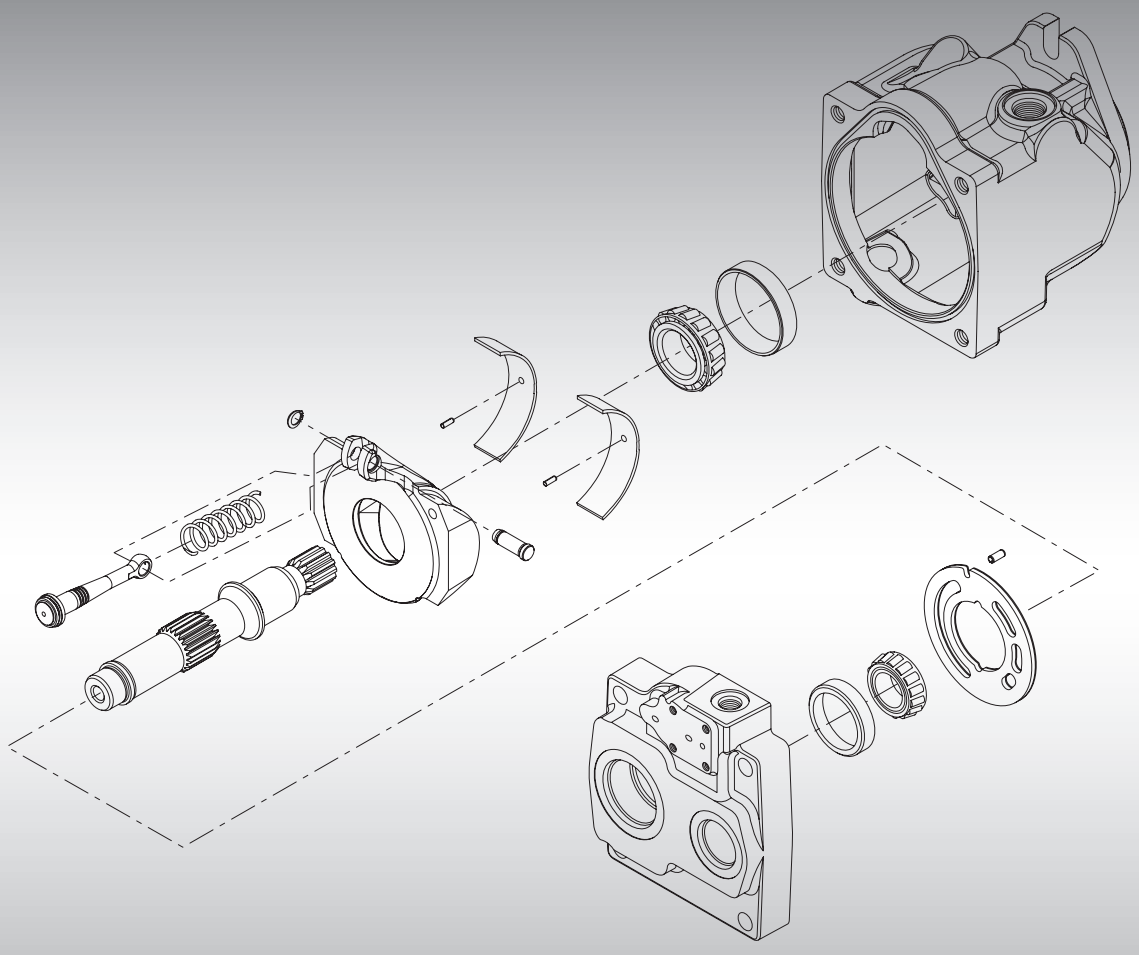

powersolutions.danfoss.com

Contents

Contents

General Information
Service parts identification 4
Nameplate 4
Date code 5
Service bulletins 5
Procedure to identify a part 5
Adobe Acrobat 2-page viewing 6
Order code 7

Control
Load sensing 8-13
Pressure compensating 14-15
Remote pressure compensating 16-17
Electric 18-113
Fan drive 114-121

Choke orifice
Orifice 122-123

Gain orifice
Gain orifice 122-123

Input shaft
Shaft 124-369

End cap
End cap 124-369

Auxiliary mounting
Auxiliary mounting flange 124-369

Housing/shaft seal
Housing/shaft seal 370-379

Displacement limiter
Displacement limiter 380-381

Special hardware
Special hardware 380-385

Displacement
Displacement 386-391

Seal kit
Overhaul seal kit 392

Service bulletins
SB-2002-031 (load sense spring guide) 393
SB-2006-005 (input shaft lip seal) 394
SB-2006-006 (servo piston rings) 395
SB-2007-047 (load sense plug assembly) 396
SB-2008-052 (C pad mounting flange) 397
SB-2010-002 (end cap servo bore) 398-399
SB-2010-026 (LS and PC plug assembly) 400
SB-2010-033 (servo piston assembly) 401
SB-2011-031 (overhaul seal kit) 402
SB-2012-011 (control/orfice) 403-404
SB-2012-024 (rotating group) 405-406
SB-2016-007 (solenoid valve adapter) 407

General information

Service parts indentification

The following information and procedure is used to identify the module group, item number, manufacture date, part number, and part name of the parts included in the Frame J open circuit pump. The Frame J includes the 45,51, 60, 65, and 75 cc displacement pumps.

The parts listed include all parts which may be used when performing either "Minor Repairs", "Major Repairs" or "Conversions" Frame J open circuit pumps.

Nameplate

Each unit will have a nameplate affixed to the housing. The nameplate will include the following information.

Model Number
The Sauer-Danfoss model number is used by the factory in manufacturing. On repeat orders, a complete unit can be ordered by the model number.

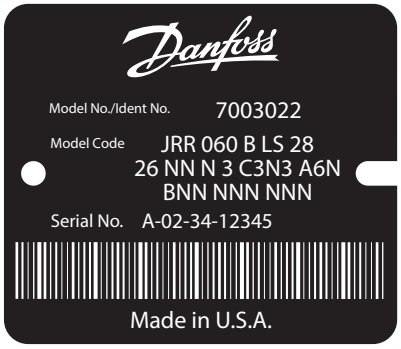

Model Code
The Sauer-Danfoss model code completely defines the specific unit and must be used when ordering parts to service this product.

Serial Number
The Sauer-Danfoss serial number is used to identify the manufacture date and the unit sequence in the build. The serial number is also used to identify the units warranty time period.

The letter code indicates the location of original manufacture (assembly). "DC" indicates the unit was originally assembled in Slovokia.

The first 2 digits indicates the year of manufacture. ("02" would indicate the unit was manufactured in 2002)

The second 2 digits indicates the calendar week of manufacture.

The last 5 digits are a sequential number used to identify a specific unit.

General information

Date code

The date code is defined as the year and week of manufacture. The same item number may list more than one part number. This indicates that there is more than one configuration for that item number. You will see that there are different date codes for the different part numbers. Find the date code of your unit from the nameplate to determine which service part number you need to order.

EXAMPLE: The service part desired is Item C090

Order Code	Item	Date Begin	Date End	Part Number	Part Name	Qty. per Model/Kit
LB	C090	98-02		4570245	Spool	1
	C090	94-34	98-01	4570025	Spool (SB-1995-006)	1

Service bulletins

All units using this order code with a date code of 94-34 and up to and including 98-01, must use part number "4570025". All units with a date code of 98-02 and newer must use part number "4570245.".

A Service Bulletin Number (SB-_ _ _ _ - _ _ _) may follow the "Part Name" of the part you desire. You must read that Service Bulletin prior to ordering that part. The information contained in these Service Bulletins, as of the print date of this bulletin, are included at the end of this manual. Service Bulletins contain more detailed information such as interchangeability, what additional parts are involved, etc. It is suggested that you add additional Service Bulletins to this manual as you recieve them.

Procedure to identify a part

General

The modular design of Series 45 units results in a simplified service parts list and part number identification procedure.

The same item numbers are used for same part names on all units within a product type. (Example: The lip seal - Item K020 has the same item number on all pumps.)

A part number that has another number following it in parentheses is done to make this a world wide manual. The first number is sold in Europe. The number in parentheses is sold in the United States. (Example: 016014 (9006200-0206), customers would order 9006200-0206 if ordering the part in the United States.)

Example of a Part Identification

The nameplate on a Series 45 pump has an Order Code of JRR 060B LS 28 26 NN N 3 C3N3 A6N BNN NNN NNN. Do this to determine the part number of the drive shaft used on this pump.

1) Referring to the input shaft module in the Order Code (see page 7), the input shaft option for this pump is identified by the code **C3N3** (JRR 060B LS 28 26 NN N 3 C3N3 A6N BNN NNN NNN)
2) Referring to the Service Parts List, find the shaft group.
3) Find the order code that relates to this unit, which is **C3N3**.
4) The shaft is item J010
5) The part number 1700520.

Adobe Acrobat 2-page viewing

Abobe Acrobat 2-page viewing

While viewing manual in Adobe Acrobat, the following settings need to be applied to ensure proper page display.

1. With open document

2. Select "View" --> "Page Display" --> "Two Page View"

3. Select "View" --> "Page Display" --> "Show Cover Page in Two Page View"

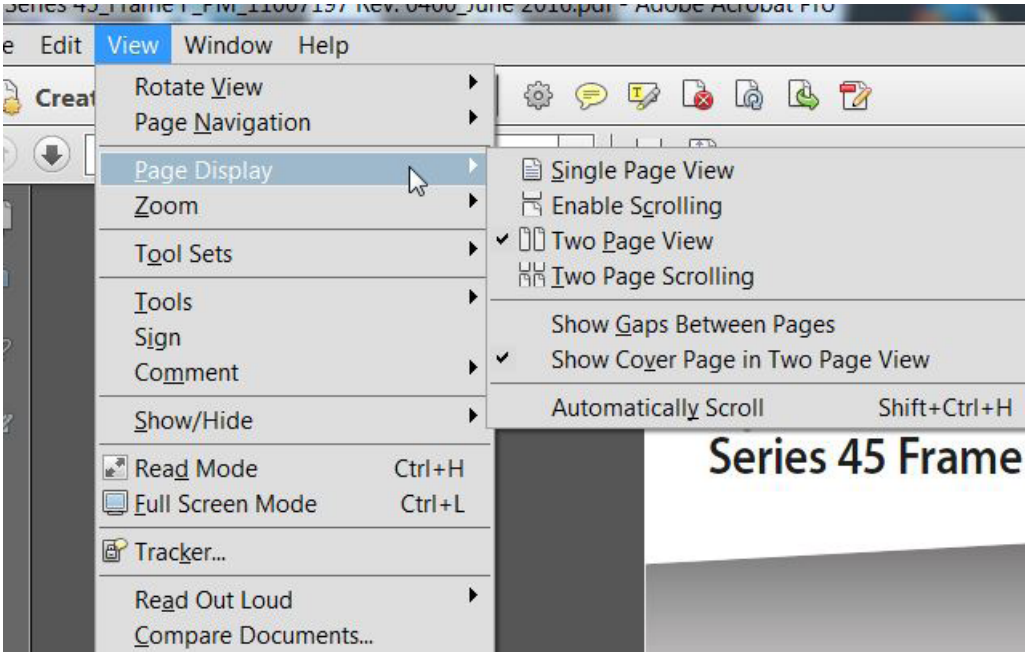

Order code

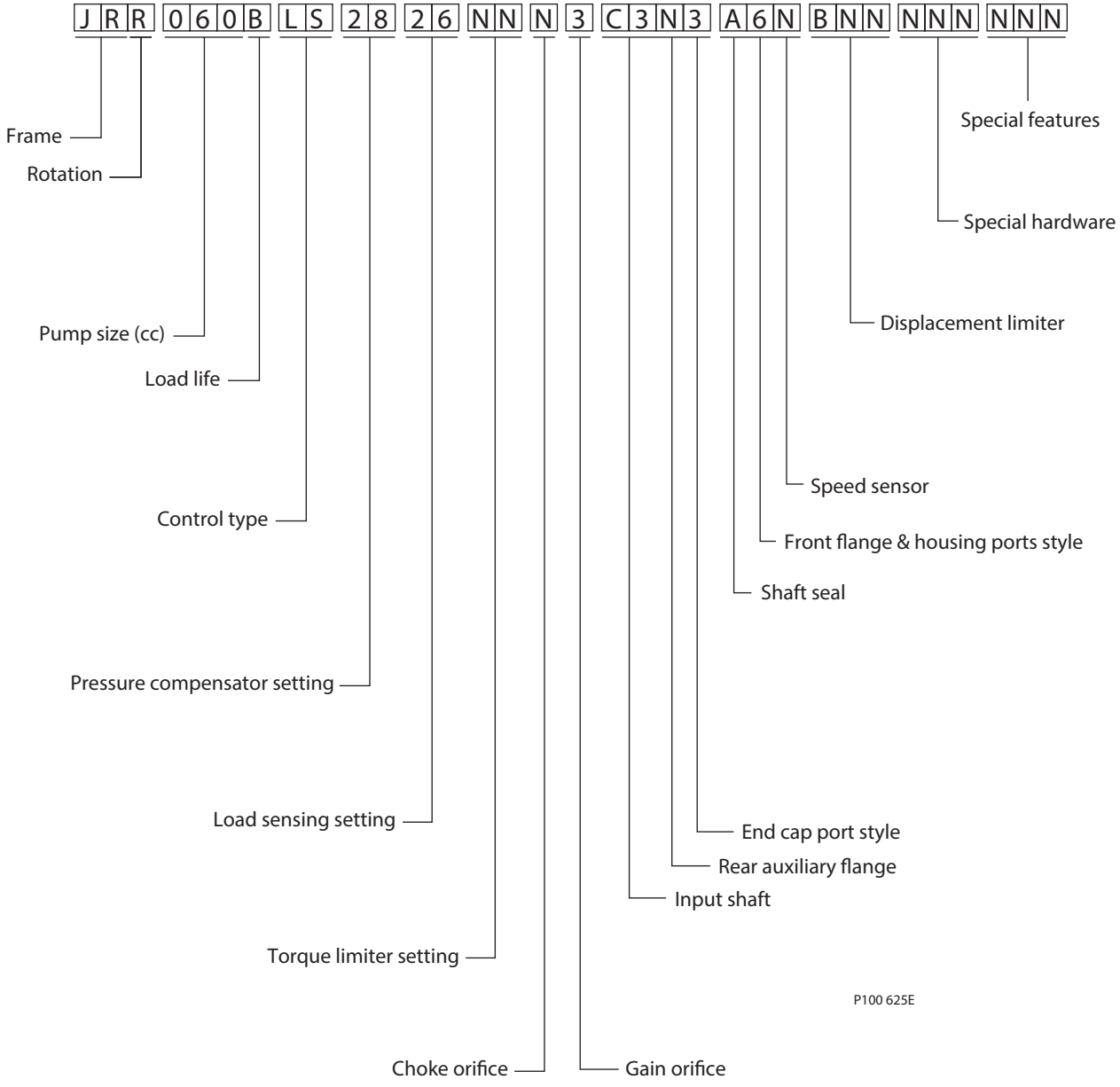
J R R 0 6 0 B L S 2 8 2 6 N N N 3 C 3 N 3 A 6 N B N N N N N N N N
Frame
Rotation
Pump size (cc)
Load life
Control type
Pressure compensator setting
Load sensing setting
Torque limiter setting
Choke orifice
Gain orifice
Input shaft
Rear auxiliary flange
End cap port style
Shaft seal
Front flange & housing ports style
Speed sensor
Displacement limiter
Special hardware
Special features
P100 625E

Control

(AZ)

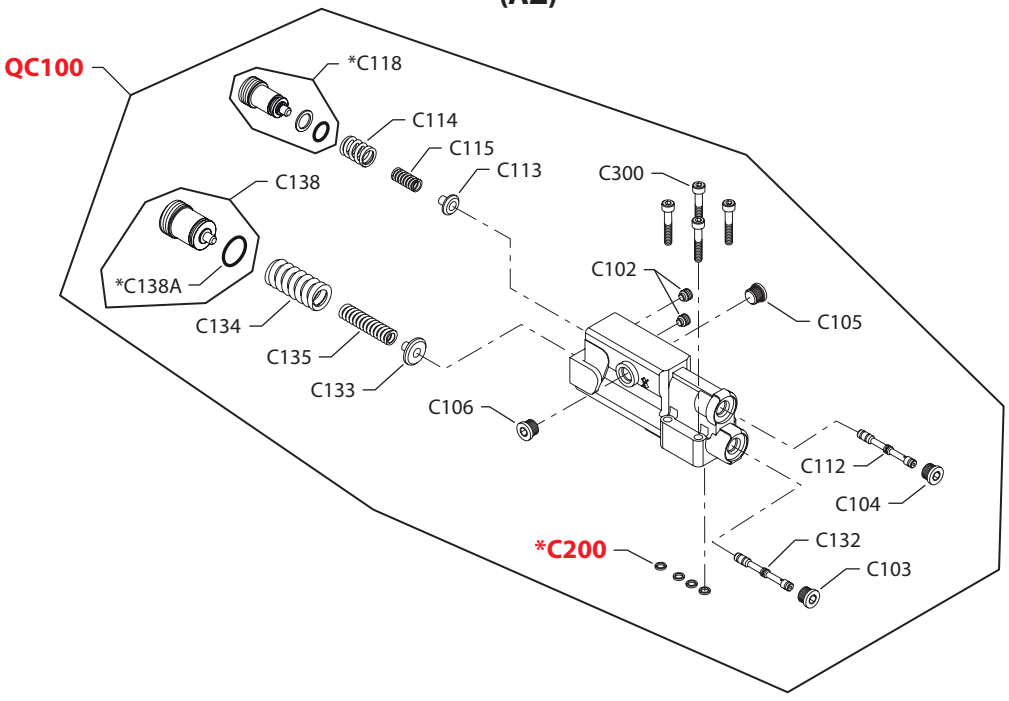

(BA, BB & BS)

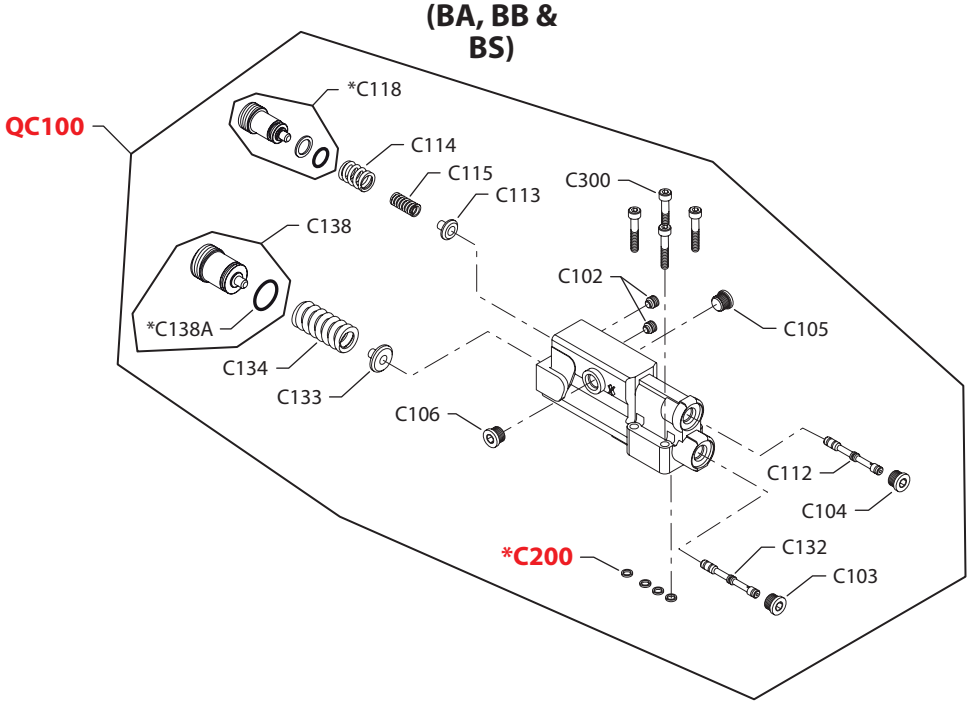

E100 544E

* = included in base motor seal kit Q210

Enlarged **bold** type item numbers are recommended part to stock for servicing.

Control

Common load sensing control parts

Order Code	Item	Date Begin	Date End	Part Number	Part Name	Qty. per Model/Kit
	C102	03-23		4740064	Set screw	2
	C103	03-23		327007 (9005110-4400)	Plug	1
	C104	03-23		327007 (9005110-4400)	Plug	1
	C105	03-23		327007 (9005110-4400)	Plug	1
	C106	03-23		327007 (9005110-4400)	Plug	1
	C113	03-23		4740246	Spring guide (SB-2002-031)	1
	C114	03-23		4740061	Spring	1
	C115	03-23		4740062	Spring	1
	C118	03-23		11062214	Adjusting plug (SB-2007-047 & SB-2010-026)	1
	C200	03-23		4740154	Seal ring	4
	C300	03-23		5000164 (9007315-0507)	Screw	4

Load sensing control

AZ	C112	03-23		4740309	Spool	1
	C132	03-23		1701124	Spool	1
	C133	03-23		4740247	Spring guide	1
	C134	03-23		4740051	Spring, outer	1
	C135	03-23		4740052	Spring, inner	1
	C138	03-23		11062379	Adjusting plug assembly	1
	C138A	03-23		5000656	O-ring	1
	QC100	03-23		11082405	Control Kit (SB-2012-011)	1
BA	C112	07-03		4740309	Spool	1
	C132	07-03		1701124	Spool	1
	C133	07-03		4740247	Spring guide	1
	C134	07-03		4740324	Spring, PC heavy	1
	C138	07-03		1700597	Adjusting plug	1
	C138A	07-03		5000656	O-ring	1
	QC100	07-03		11038636	Control Kit, High pressure, special (SB-2012-011)	1
BB	C112	03-23		4740309	Spool	1
	C132	03-23		1701124	Spool	1
	C133	03-23		4740247	Spring guide	1
	C134	03-23		4740324	Spring, PC heavy	1
	C138	03-23		1700597	Adjusting plug	1
	C138A	03-23		5000656	O-ring	1
	QC100	03-23		11112211	Control Kit, High pressure (SB-2012-011)	1
BS	C112	11-42		1701124	Spool	1
	C132	11-42		1701124	Spool	1
	C133	11-42		4740247	Spring guide	1
	C134	11-42		4740324	Spring, PC heavy	1
	C138	11-42		1700597	Adjusting plug	1
	C138A	11-42		5000656	O-ring	1
	QC100	11-42		11112207	Control Kit (SB-2012-011)	1

Control

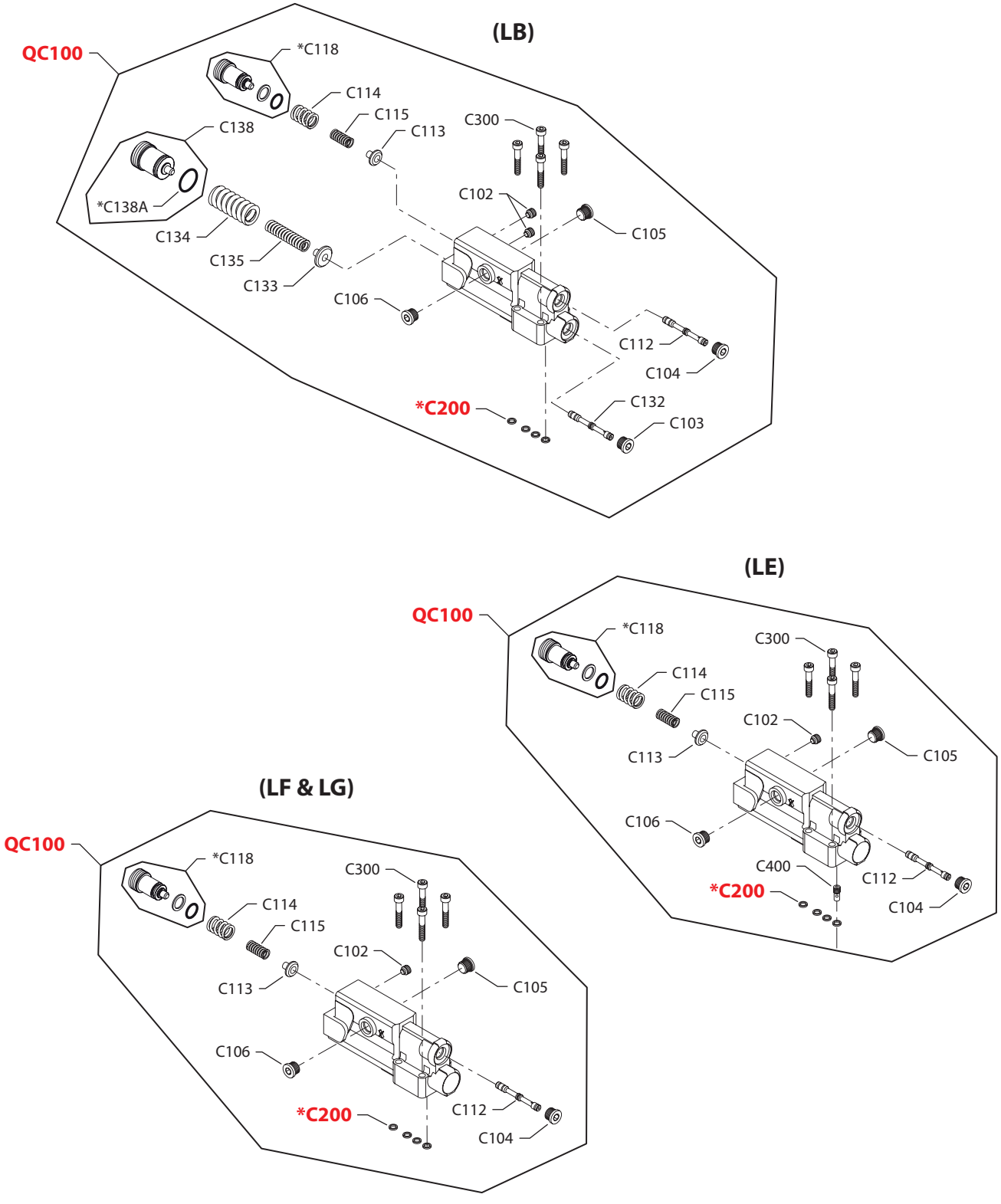

E100 542E

Enlarged **bold** type item numbers are recommended part to stock for servicing.

* = included in base motor seal kit Q210

Control

Common load sensing control parts

Order Code	Item	Date Begin	Date End	Part Number	Part Name	Qty. per Model/Kit
	C104	03-23		327007 (9005110-4400)	Plug assembly	1
	C105	03-23		327007 (9005110-4400)	Plug assembly	1
	C106	03-23		327007 (9005110-4400)	Plug assembly	1
	C113	03-23		4740246	Spring guide	1
	C114	03-23		4740061	Spring	1
	C115	03-23		4740062	Spring	1
	C118	03-23		11062214	Adjusting plug (SB-2007-047 & SB-2010-026)	1
	C200	03-23		4740154	Seal ring	4
	C300	03-23		5000164 (9007315-0507)	Screw	4

Load sensing control

LB	C102	03-23		4740064	Set screw	2
	C103	03-23		327007 (9005110-4400)	Plug assembly	1
	C112	03-23		4740309	Spool	1
	C132	03-23		1701124	Spool	1
	C133	03-23		4740247	Spring guide	1
	C134	03-23		4740051	Spring, outer	1
	C135	03-23		4740052	Spring, inner	1
	C138	03-23		11062379	Adjusting plug assembly	1
	C138A	03-23		5000656	O-ring	1
	QC100	03-23		11112205	Control Kit (SB-2012-011)	1
LE	C102	03-23		4740064	Set screw	1
	C112	03-23		1701124	Spool	1
	C400	03-23		4740313	Edge filter plug	1
	QC100	03-23		4510400	Control kit, load sensing only, with filter (SB-2012-011)	1
LF	C102	08-21		4740064	Set screw	1
	C112	08-21		1701124	Spool	1
	QC100	08-21		11050069	Control kit, load sensing only	1
LG	C102	10-21		4740064	Set screw	1
	C112	10-21		11084056	Spool	1
	QC100	10-21		11106465	Control kit, load sensing only	1

Control

(LJ & LS)

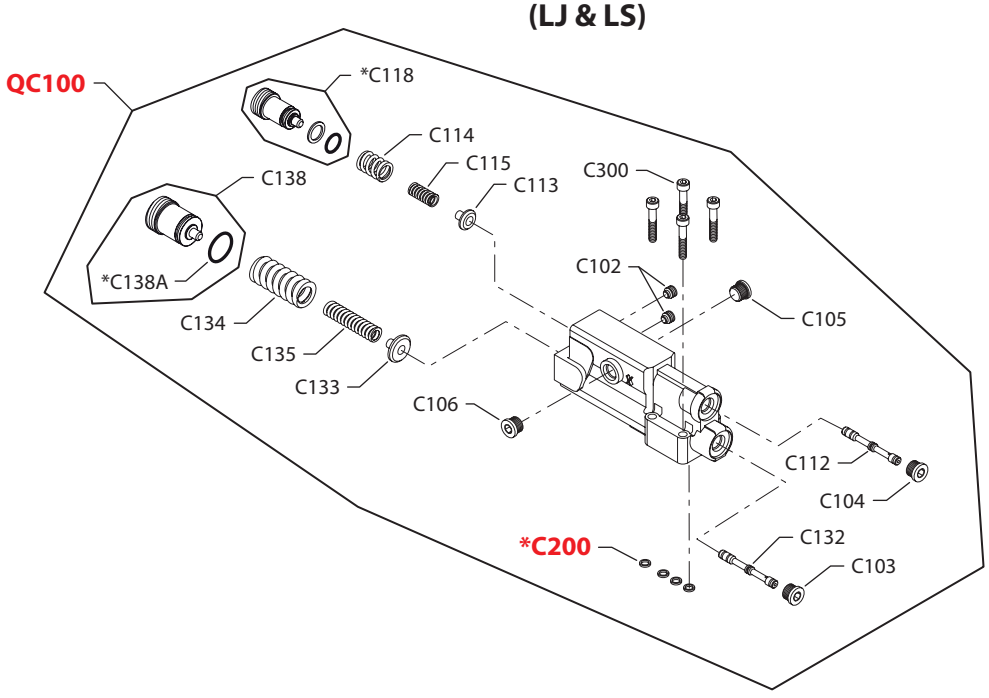

(LY & RY)

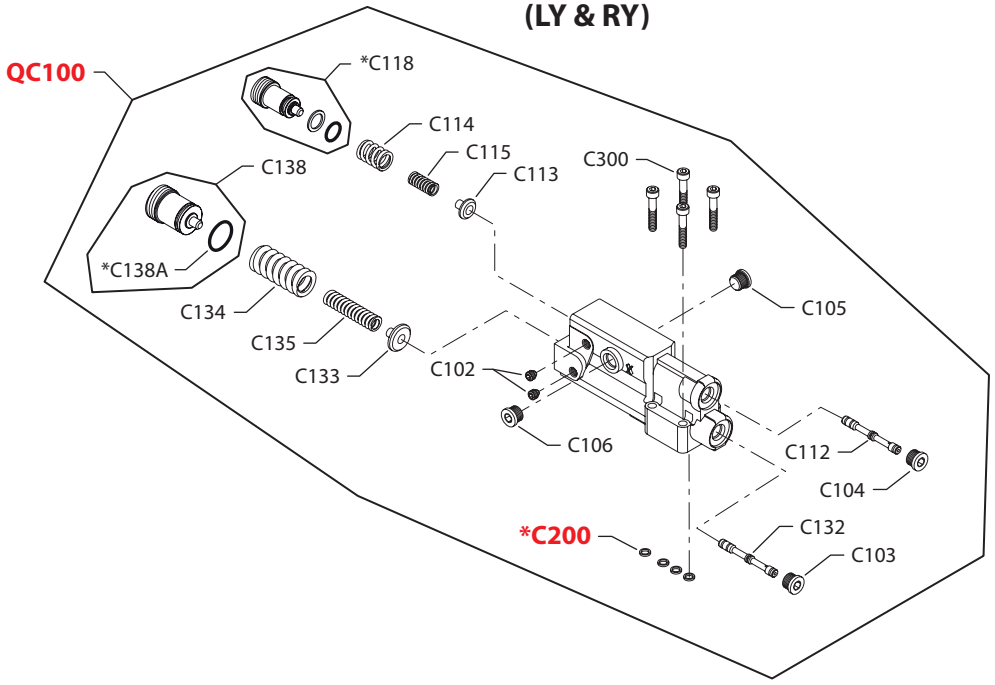

E100 701E

* = included in base motor seal kit Q210

Enlarged **bold** type item numbers are recommended part to stock for servicing.

Control

Common load sensing control parts

Order Code	Item	Date Begin	Date End	Part Number	Part Name	Qty. per Model/Kit
	C102	03-23		4740064	Set screw	2
	C103	03-23		327007 (9005110-4400)	Plug assembly	1
	C104	03-23		327007 (9005110-4400)	Plug assembly	1
	C112	03-23		1701124	Spool	1
	C113	03-23		4740246	Spring guide (SB-2002-031)	1
	C114	03-23		4740061	Spring	1
	C115	03-23		4740062	Spring	1
	C118	03-23		11062214	Adjusting plug (SB-2007-047 & SB-2010-026)	1
	C132	03-23		1701124	Spool	1
	C133	03-23		4740247	Spring guide	1
	C134	03-23		4740051	Spring, outer	1
	C135	03-23		4740052	Spring, inner	1
	C138	03-23		11062379	Adjusting plug assembly	1
	C138A	03-23		5000656	O-ring	1
	C200	03-23		4740154	Seal ring	4
	C300	03-23		5000164 (9007315-0507)	Screw	4

Load sensing control

LJ	C105	14-39		5000572	Plug assembly, M12	1
	C106	14-39		5000572	Plug assembly, M12	1
	QC100	14-39		4510444	Control kit, load sensing, metric	1
LS	C105	03-23		327007 (9005110-4400)	Plug assembly	1
	C106	03-23		327007 (9005110-4400)	Plug assembly	1
	QC100	03-23		11112208	Control kit, load sensing (SB-2012-011)	1
LY	C105	13-07		327007 (9005110-4400)	Plug assembly	1
	C106	13-07		327007 (9005110-4400)	Plug assembly	1
	QC100	13-07		11126785	Control kit, load sensing	1
RY	C105	15-47		327007 (9005110-4400)	Plug assembly	1
	C106	15-47		327007 (9005110-4400)	Plug assembly	1
	QC100	15-47		11126785	Control kit, load sensing	1

Control

(BC)

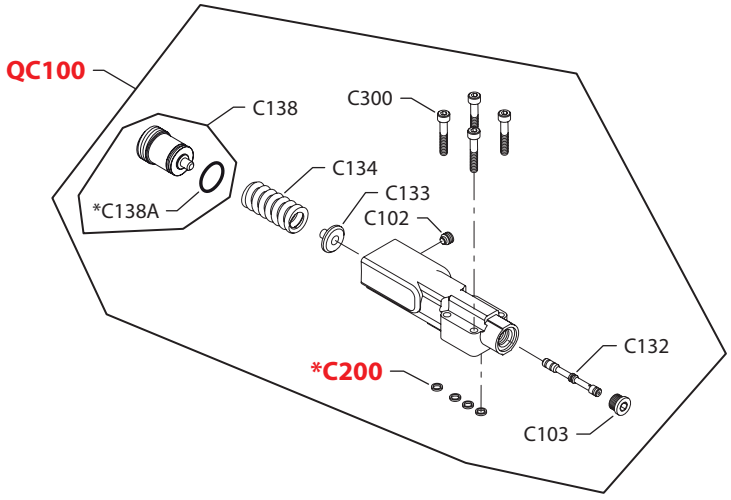

(PC)

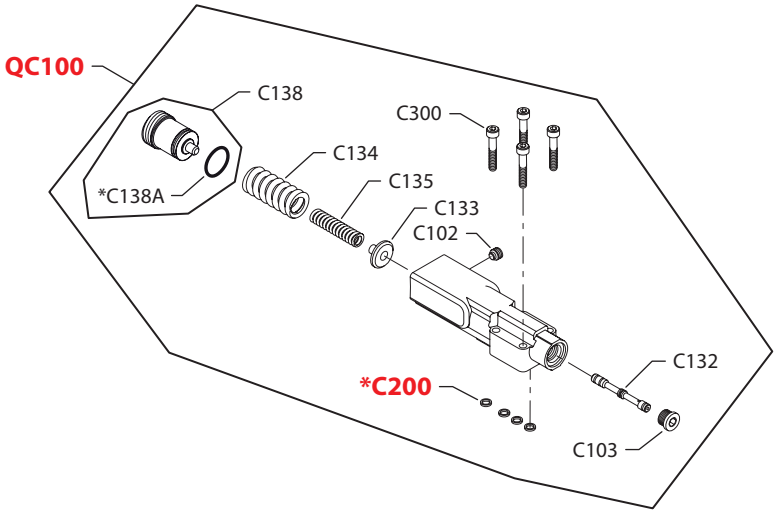

E100 543E

* = included in base motor seal kit Q210

Enlarged **bold** type item numbers are recommended part to stock for servicing.

Control

Pressure compensating control

Order code	Item	Date begin	Date end	Part number	Part name	Qty. per model/kit
BC	C102	03-23		4740064	Set screw	1
	C103	03-23		327007 (9005110-4400)	Plug assembly	1
	C132	03-23		1701124	Spool	1
	C133	03-23		4740247	Spring guide (SB-2002-034)	1
	C134	03-23		4740324	Spring, PC, heavy	1
	C138	03-23		1700597	Adjusting plug	1
	C138A	03-23		5000656	O-ring	1
	C200	03-23		4740154	Seal ring	4
	C300	03-23		5000164 (9007315-0507)	Screw	4
	QC100	03-23		4510421	Control Kit, PC, high pressure	1
PC	C102	03-23		4740064	Set screw	1
	C103	03-23		327007 (9005110-4400)	Plug assembly	1
	C132	03-23		1701124	Spool	1
	C133	03-23		4740247	Spring guide (SB-2002-034)	1
	C134	03-23		4740051	Spring, outer	1
	C135	03-23		4740052	Spring, inner	1
	C138	03-23		11062379	Adjusting plug assembly	1
	C138A	03-23		5000656	O-ring	1
	C200	03-23		4740154	Seal ring	4
	C300	03-23		5000164 (9007315-0507)	Screw	4
	QC100	03-23		4510422	Control kit, PC	1

Control

(BP)

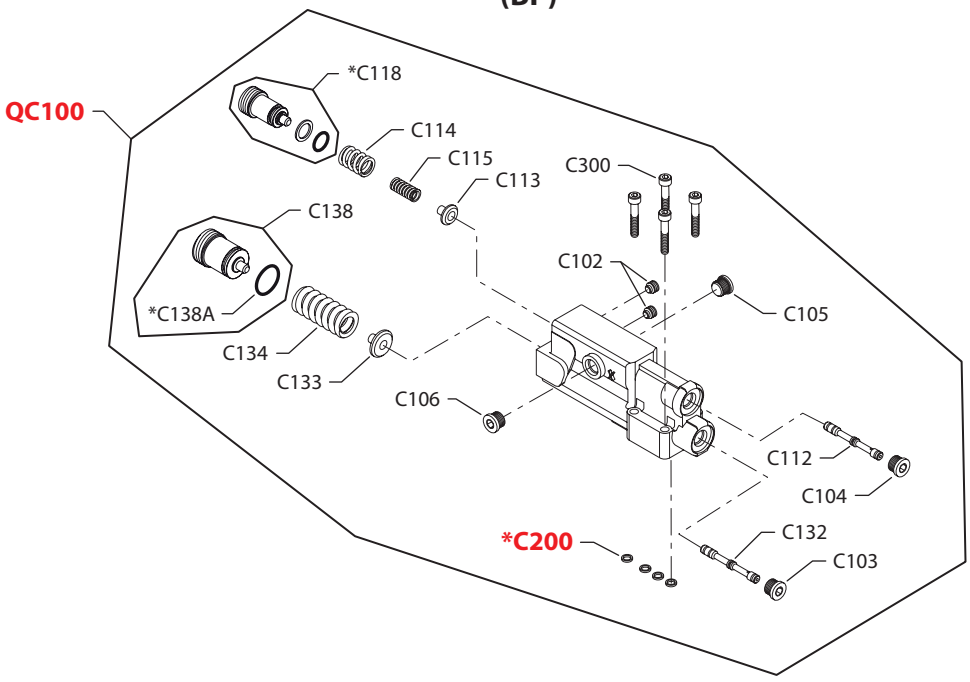

(RP)

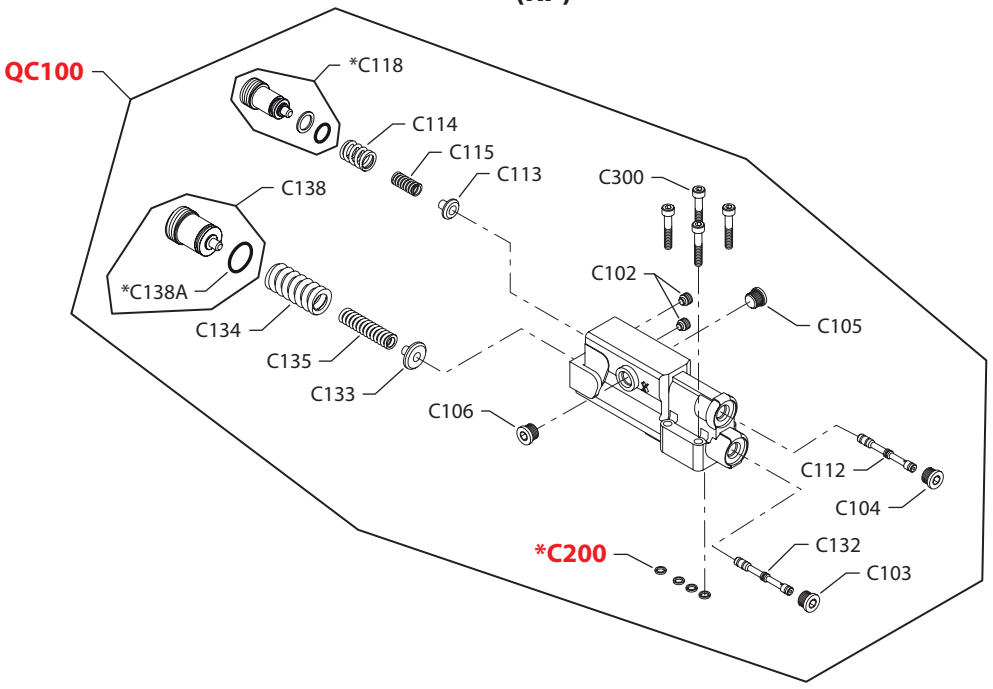

E103 216E

* = included in base motor seal kit Q210

Enlarged **bold** type item numbers are recommended part to stock for servicing.

Control

Pressure compensating control, remote

Order code	Item	Date begin	Date end	Part number	Part name	Qty. per model/kit
BP	C102	03-23		4740064	Set screw	2
	C103	03-23		327007 (9005110-4400)	Plug assembly	1
	C104	03-23		327007 (9005110-4400)	Plug assembly	1
	C105	03-23		327007 (9005110-4400)	Plug assembly	1
	C106	03-23		327007 (9005110-4400)	Plug assembly	1
	C112	03-23		4740300	Spool	1
	C113	03-23		4740301	Spring guide	1
	C114	03-23		4740061	Spring	1
	C115	03-23		4740062	Spring	1
	C118	03-23		11062214	Adjusting plug (SB-2007-047 & SB-2010-026)	1
	C132	03-23		1701124	Spool	1
	C133	03-23		4740247	Spring guide	1
	C134	03-23		4740324	Spring, PC heavy	1
	C138	03-23		1700597	Adjusting plug assembly	1
	C138A	03-23		5000656	O-ring	1
	C200	03-23		4740154	Seal ring	4
	C300	03-23		5000164 (9007315-0507)	Screw	4
	QC100	03-23		11112212	Control Kit, remote PC, high pressure (SB-2012-011)	1
RP	C102	03-23		4740064	Set screw	2
	C103	03-23		327007 (9005110-4400)	Plug assembly	1
	C104	03-23		327007 (9005110-4400)	Plug assembly	1
	C105	03-23		327007 (9005110-4400)	Plug assembly	1
	C106	03-23		327007 (9005110-4400)	Plug assembly	1
	C112	03-23		4740300	Spool	1
	C113	03-23		4740301	Spring guide	1
	C114	03-23		4740061	Spring	1
	C115	03-23		4740062	Spring	1
	C118	03-23		11062214	Adjusting plug (SB-2007-047 & SB-2010-026)	1
	C132	03-23		1701124	Spool	1
	C133	03-23		4740247	Spring guide	1
	C134	03-23		4740051	Spring, PC outer	1
	C135	03-23		4740052	Spring, PC inner	1
	C138	03-23		11062379	Adjusting plug assembly	1
	C138A	03-23		5000656	O-ring	1
	C200	03-23		4740154	Seal ring	4
	C300	03-23		5000164 (9007315-0507)	Screw	4
	QC100	03-23		11112213	Control Kit, remote PC (SB-2012-011)	1

Control

(AF & AG)

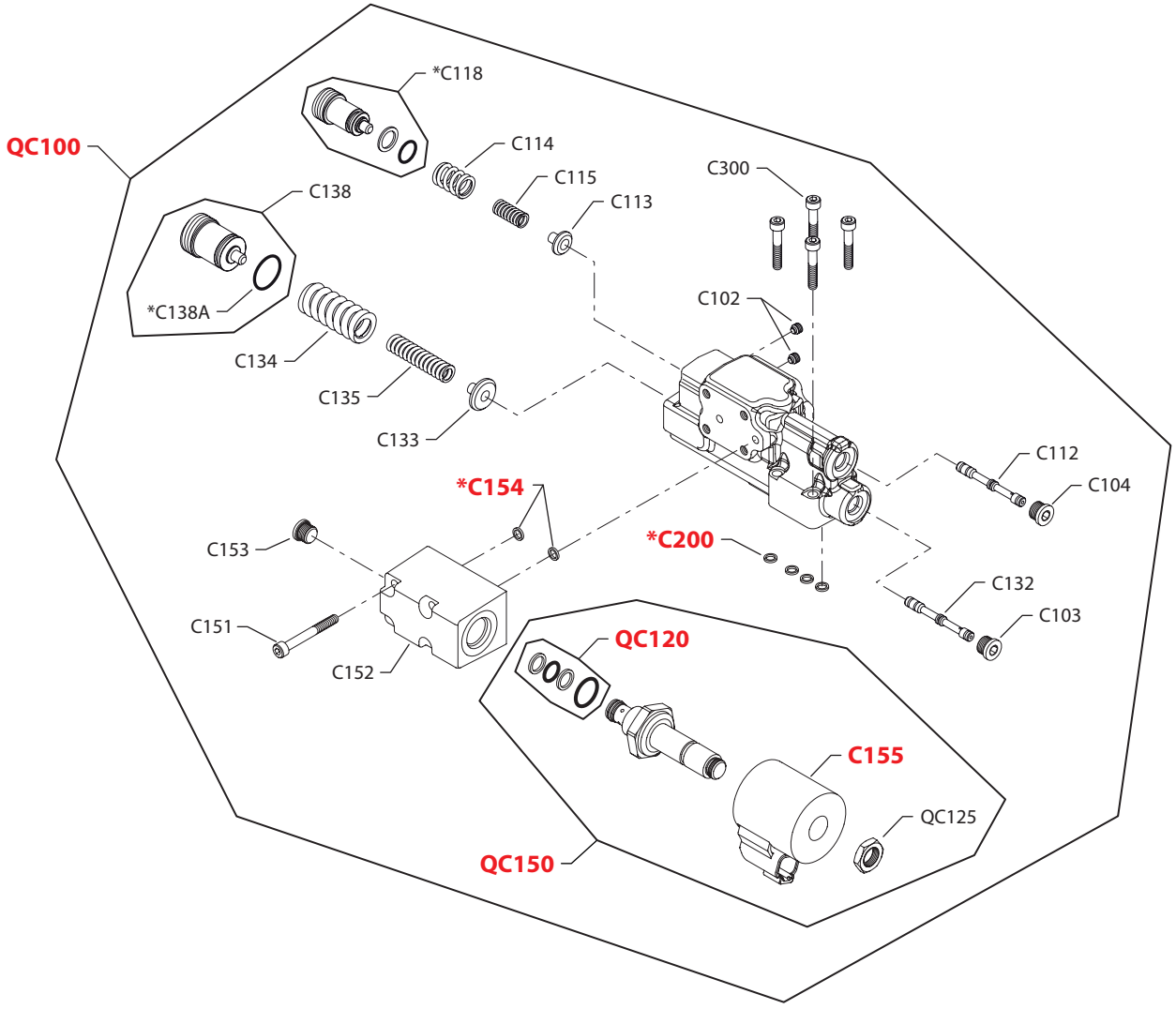

E101 700E

* = included in base motor seal kit Q210

Enlarged **bold** type item numbers are recommended part to stock for servicing.

Control

Electric on/off control

Order code	Item	Date begin	Date end	Part number	Part name	Qty. per model/kit
AF	C102	03-23		4740064	Set screw	2
	C103	03-23		327007 (9005110-4400)	Plug assembly	1
	C104	03-23		327007 (9005110-4400)	Plug assembly	1
	C112	03-23		4740300	Spool	1
	C113	03-23		4740301	Spring guide	1
	C114	03-23		4740061	Spring	1
	C115	03-23		4740062	Spring	1
	C118	03-23		11062214	Adjusting plug assembly (SB-2010-026)	1
	C132	03-23		1701124	Spool	1
	C133	03-23		4740247	Spring guide	1
	C134	03-23		4740051	Spring, PC outer	1
	C135	03-23		4740052	Spring, PC inner	1
	C138	03-23		11062379	Adjusting plug assembly (SB-2010-026)	1
	C138A	03-23		5000656	O-ring	1
	C151	03-23		9007315-0510	Screw	4
	C152	03-23		11150082	Solenoid valve adapter (SB-2016-007)	1
	C153	03-23		327007 (9005110-4400)	Plug assembly	1
	C154	03-23		4740154	Seal ring	2
	C155	03-23		1701291	Coil, 12 volt	1
	C200	03-23		4740154	Seal ring	4
	C300	03-23		5000164 (9007315-0507)	Screw	4
	QC100	03-23		11112296	Control Kit, electric on/off, 12 volt, NO (SB-2012-011)	1
	QC120	03-23		11103621	Solenoid valve seal kit	1
	QC125	03-23		11104457	Nut	1
	QC150	03-23		11104461	Solenoid valve kit, 12 volt	1
AG	C102	03-23		4740064	Set screw	2
	C103	03-23		327007 (9005110-4400)	Plug assembly	1
	C104	03-23		327007 (9005110-4400)	Plug assembly	1
	C112	03-23		4740300	Spool	1
	C113	03-23		4740301	Spring guide	1
	C114	03-23		4740061	Spring	1
	C115	03-23		4740062	Spring	1
	C118	03-23		11062214	Adjusting plug assembly (SB-2010-026)	1
	C132	03-23		1701124	Spool	1
	C133	03-23		4740247	Spring guide	1
	C134	03-23		4740051	Spring, PC outer	1
	C135	03-23		4740052	Spring, PC inner	1
	C138	03-23		11062379	Adjusting plug assembly (SB-2010-026)	1
	C138A	03-23		5000656	O-ring	1
	C151	03-23		9007315-0510	Screw	4
	C152	03-23		11150082	Solenoid valve adapter (SB-2016-007)	1
	C153	03-23		327007 (9005110-4400)	Plug assembly	1
	C154	03-23		4740154	Seal ring	2
	C155	03-23		1701291	Coil, 12 volt	1
	C200	03-23		4740154	Seal ring	4
	C300	03-23		5000164 (9007315-0507)	Screw	4
	QC100	03-23		11112295	Control Kit, electric on/off, 12 volt, NC (SB-2012-011)	1
	QC120	03-23		11103621	Solenoid valve seal kit	1
	QC125	03-23		11104457	Nut	1
	QC150	03-23		11104463	Solenoid valve kit, 12 volt	1

Control

(AH)

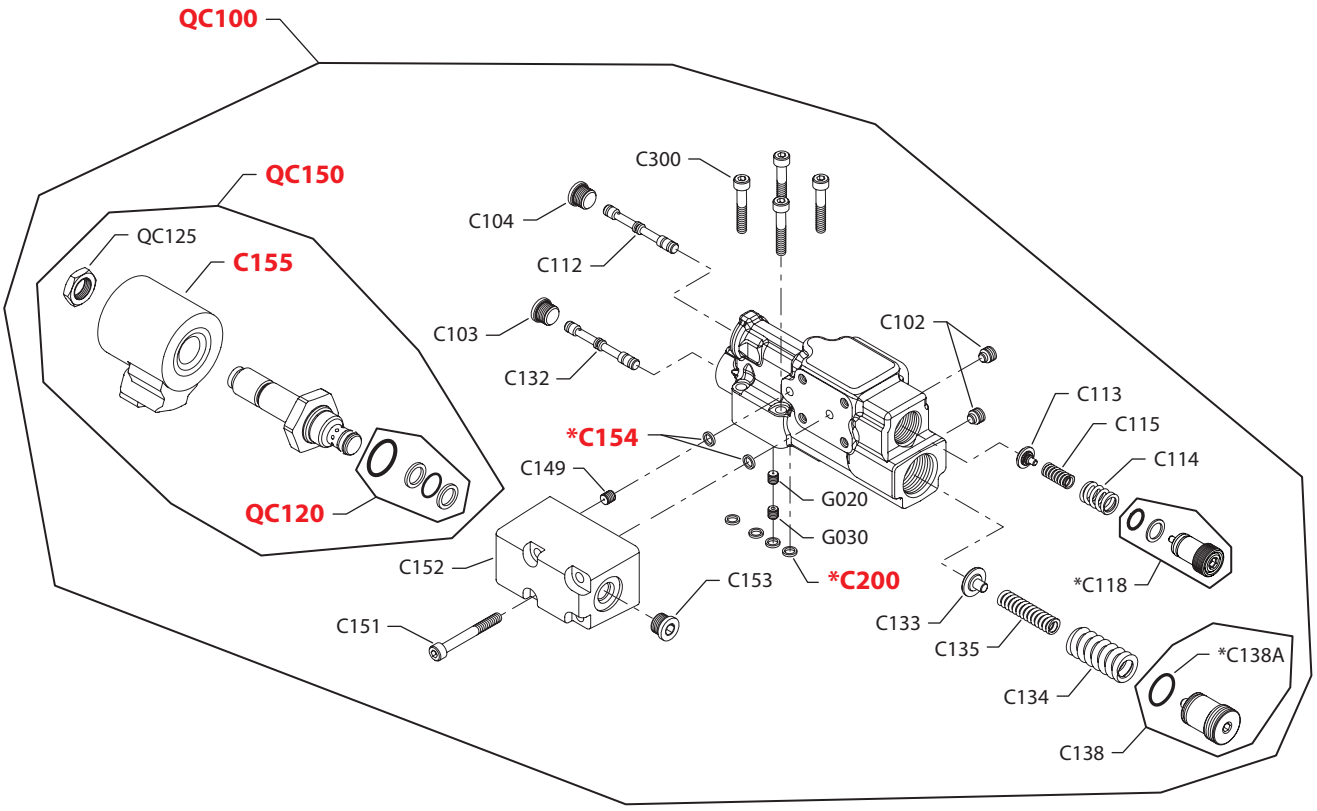

E101 621E

* = included in base motor seal kit Q210

Enlarged **bold** type item numbers are recommended part to stock for servicing.

Control

Electric proportional control

Order code	Item	Date begin	Date end	Part number	Part name	Qty. per model/kit
AH	C102	03-23		4740064	Set screw	2
	C103	03-23		327007 (9005110-4400)	Plug assembly	1
	C104	03-23		327007 (9005110-4400)	Plug assembly	1
	C112	03-23		1701439	Spool	1
	C113	03-23		4740301	Spring guide	1
	C114	03-23		4740061	Spring	1
	C115	03-23		4740062	Spring	1
	C118	03-23		11062214	Adjusting plug assembly (SB-2010-026)	1
	C132	03-23		1701124	Spool	1
	C133	03-23		4740247	Spring guide	1
	C134	03-23		4740051	Spring, PC outer	1
	C135	03-23		4740052	Spring, PC inner	1
	C138	03-23		11062379	Adjusting plug assembly (SB-2010-026)	1
	C138A	03-23		5000656	O-ring	1
	C149	03-23		739144	Orifice plug, 0.8mm	1
	C151	03-23		9007315-0510	Screw	4
	C152	03-23		11150082	Solenoid valve adapter (SB-2016-007)	1
	C153	03-23		327007 (9005110-4400)	Plug assembly	1
	C154	03-23		4740154	Seal ring	2
	C155	03-23		1701291	Coil, 12 volt	1
	C200	03-23		4740154	Seal ring	4
	C300	03-23		5000164 (9007315-0507)	Screw	4
	G020	12-40		739144	Orifice, 0.8mm (SB-2012-011)	1
	G020	12-40		519659	Orifice, 1.0mm (SB-2012-011)	1
	G030	12-40		518215	Orifice plug (SB-2012-011)	1
	QC100	03-23		11112221	Control Kit, electric prop. 12 volt, NC (SB-2012-011)	1
	QC120	03-23		11103621	Solenoid valve seal kit	1
	QC125	03-23		11104460	Nut	1
	QC150	03-23		11104467	Solenoid valve kit, 12 volt	1

Control

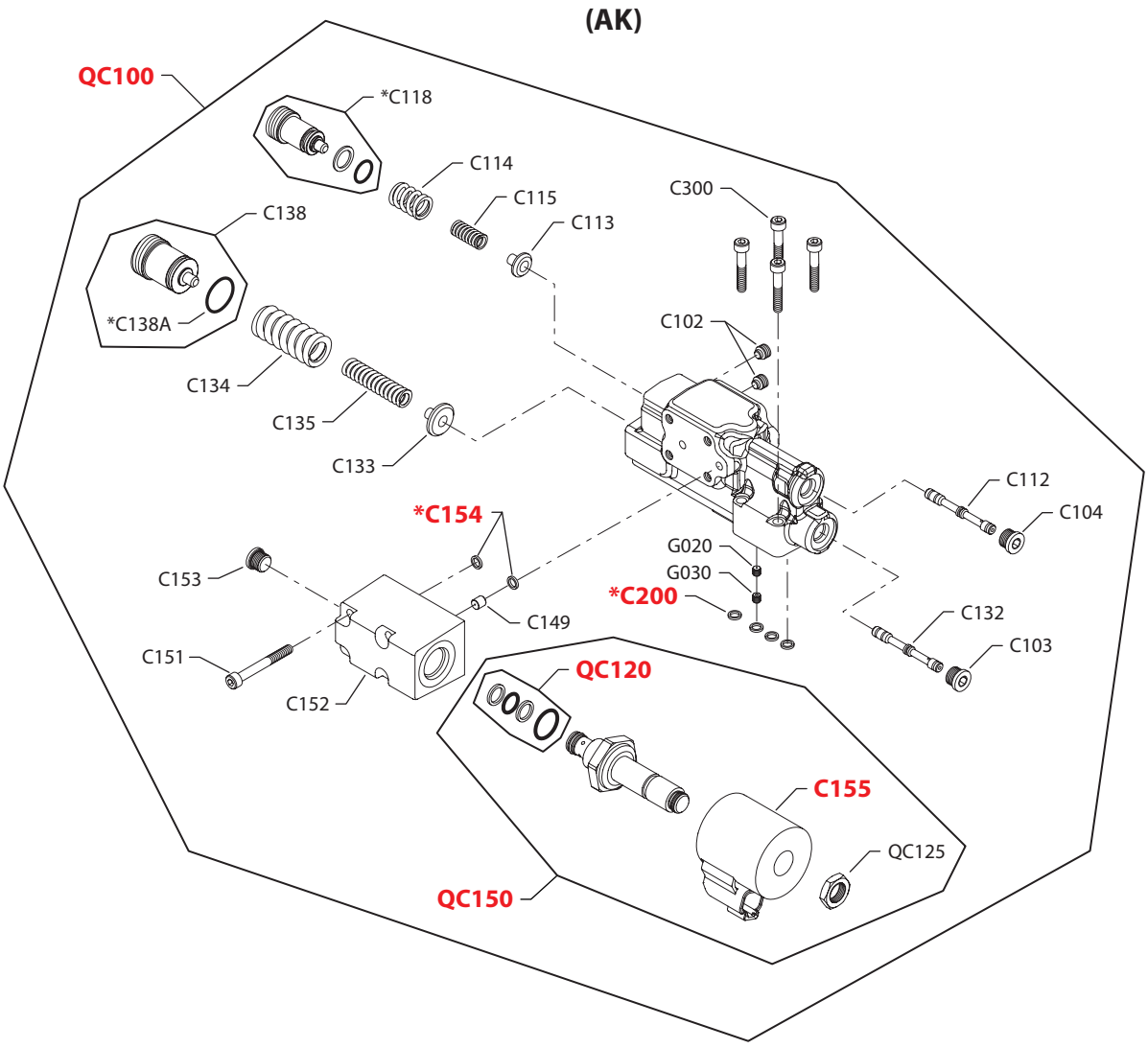

E101 833E

* = included in base motor seal kit Q210

Enlarged **bold** type item numbers are recommended part to stock for servicing.

Control

Electric proportional control

Order code	Item	Date begin	Date end	Part number	Part name	Qty. per model/kit
AK	C102	06-42		4740064	Set screw	2
	C103	06-42		327007 (9005110-4400)	Plug assembly	1
	C104	06-42		327007 (9005110-4400)	Plug assembly	1
	C112	06-42		1701439	Spool	1
	C113	06-42		4740301	Spring guide	1
	C114	06-42		4740061	Spring	1
	C115	06-42		4740062	Spring	1
	C118	06-42		11062214	Adjusting plug assembly (SB-2010-026)	1
	C132	06-42		1701124	Spool	1
	C133	06-42		4740247	Spring guide	1
	C134	06-42		4740051	Spring, PC outer	1
	C135	06-42		4740052	Spring, PC inner	1
	C138	06-42		11062379	Adjusting plug assembly (SB-2010-026)	1
	C138A	06-42		5000656	O-ring	1
	C149	06-42		739144	Orifice plug, 0.8mm	1
	C151	06-42		9007315-0510	Screw	4
	C152	06-42		11150082	Solenoid valve adapter (SB-2016-007)	1
	C153	06-42		327007 (9005110-4400)	Plug assembly	1
	C154	06-42		4740154	Seal ring	2
	C155	06-42		1701563	Coil, 24 volt	1
	C200	06-42		4740154	Seal ring	4
	C300	06-42		5000164 (9007315-0507)	Screw	4
	G020	12-40		739144	Orifice, 0.8mm (SB-2012-011)	1
	G020	12-40		519659	Orifice, 1.0mm (SB-2012-011)	1
	G030	12-40		518215	Orifice plug (SB-2012-011)	1
	QC100	06-42		11112291	Control Kit, electric prop. 24 volt, NC (SB-2012-011)	1
	QC120	06-42		11103621	Solenoid valve seal kit	1
	QC125	06-42		11104460	Nut	1
	QC150	06-42		11104468	Solenoid valve kit, 24 volt	1

Control

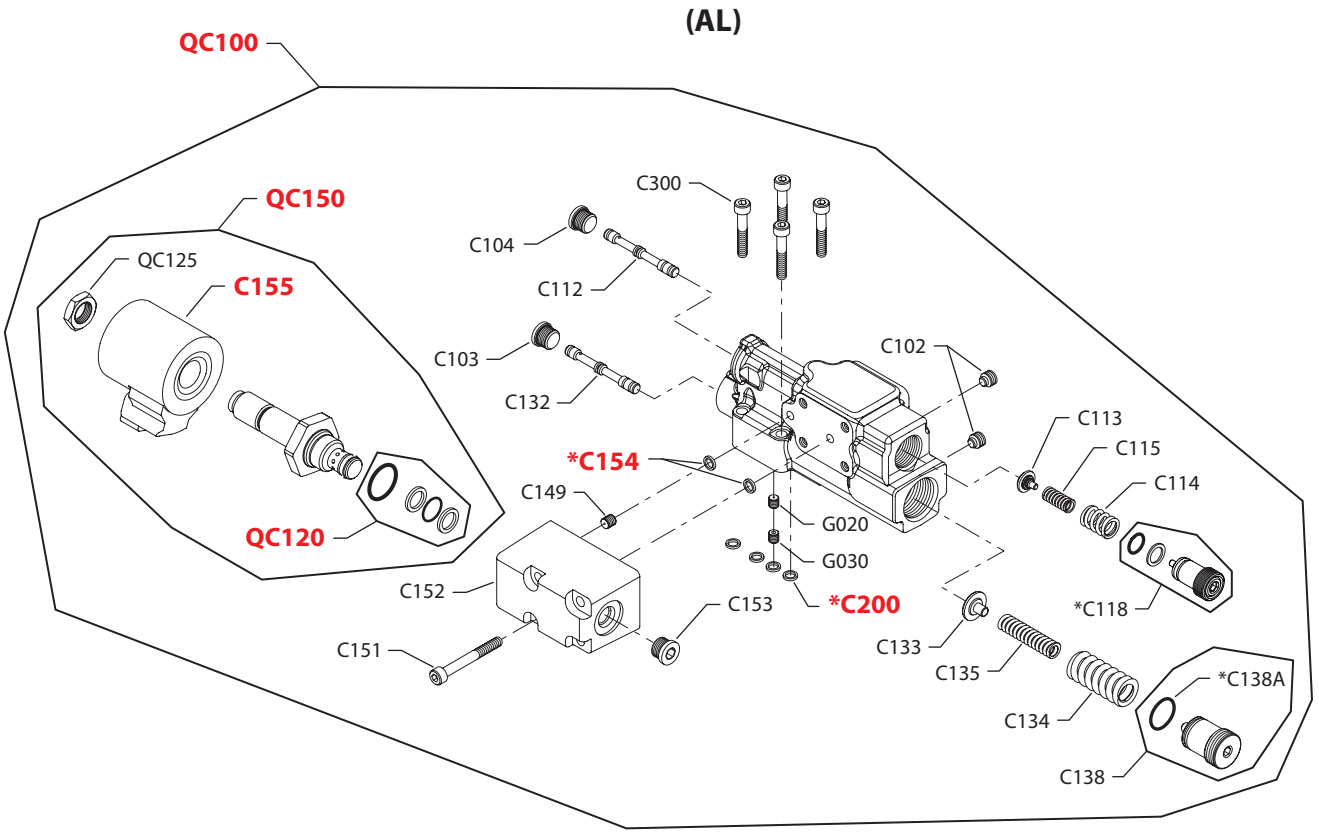

E101 621E

* = included in base motor seal kit Q210

Enlarged **bold** type item numbers are recommended part to stock for servicing.

Control

Electric proportional control

Order code	Item	Date begin	Date end	Part number	Part name	Qty. per model/kit
AL	C102	08-20		4740064	Set screw	2
	C103	08-20		327007 (9005110-4400)	Plug assembly	1
	C104	08-20		327007 (9005110-4400)	Plug assembly	1
	C112	08-20		1701439	Spool	1
	C113	08-20		4740301	Spring guide	1
	C114	08-20		4740061	Spring	1
	C115	08-20		4740062	Spring	1
	C118	08-20		11062214	Adjusting plug assembly (SB-2010-026)	1
	C132	08-20		1701124	Spool	1
	C133	08-20		4740247	Spring guide	1
	C134	08-20		4740051	Spring, PC outer	1
	C135	08-20		4740052	Spring, PC inner	1
	C138	08-20		11062379	Adjusting plug assembly (SB-2010-026)	1
	C138A	08-20		5000656	O-ring	1
	C149	08-20		739144	Orifice plug, 0.8mm	1
	C151	08-20		9007315-0510	Screw	4
	C152	08-20		11150082	Solenoid valve adapter (SB-2016-007)	1
	C153	08-20		327007 (9005110-4400)	Plug assembly	1
	C154	08-20		4740154	Seal ring	2
	C155	08-20		1701563	Coil, 24 volt	1
	C200	08-20		4740154	Seal ring	4
	C300	08-20		5000164 (9007315-0507)	Screw	4
	G020	12-40		739144	Orifice, 0.8mm (SB-2012-011)	1
	G020	12-40		519659	Orifice, 1.0mm (SB-2012-011)	1
	G030	12-40		518215	Orifice plug (SB-2012-011)	1
	QC100	08-20		11112218	Control Kit, electric prop. 24 volt, NC (SB-2012-011)	1
	QC120	08-20		11103621	Solenoid valve seal kit	1
	QC125	08-20		11104460	Nut	1
	QC150	08-20		11104468	Solenoid valve kit, 24 volt	1

Control

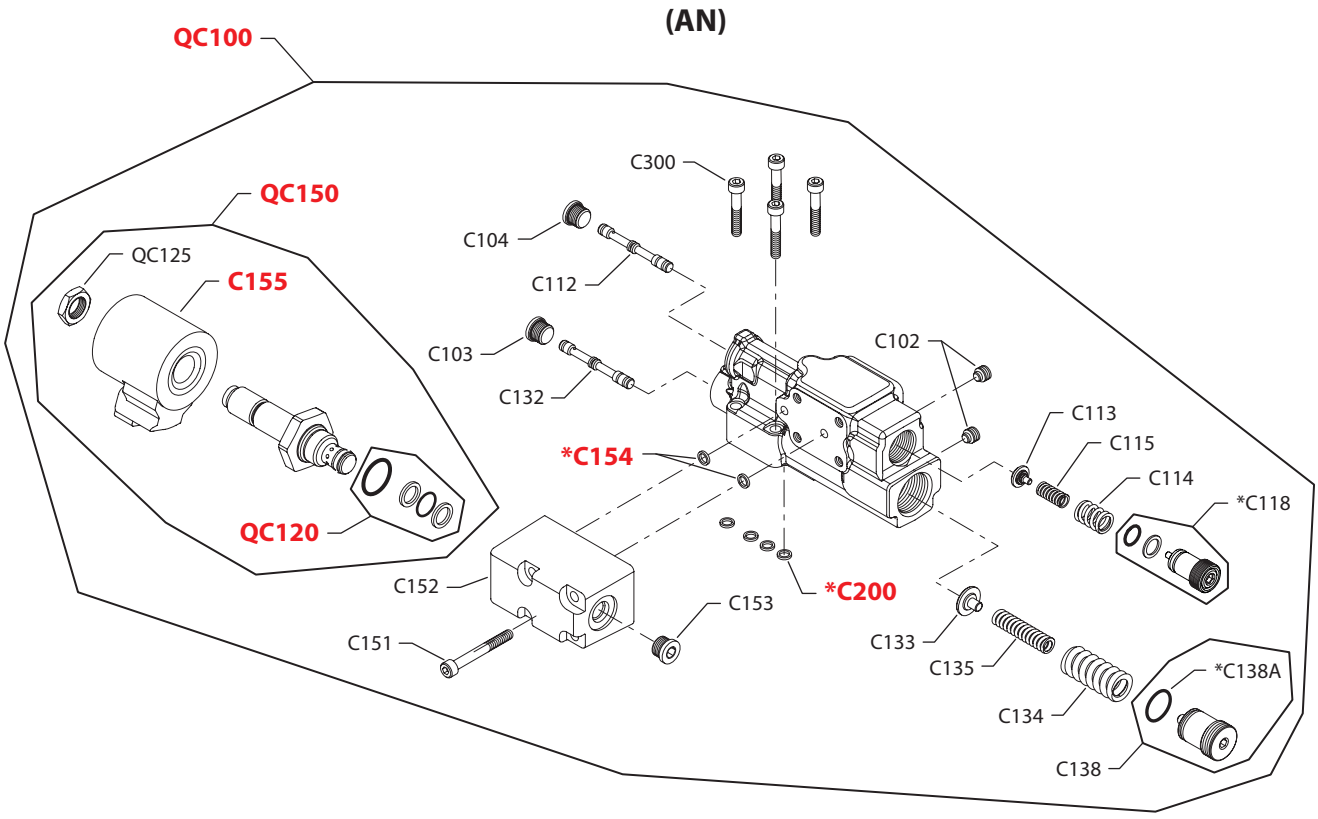

E101 622E

* = included in base motor seal kit Q210

Enlarged **bold** type item numbers are recommended part to stock for servicing.

Control

Electric on/off control

Order code	Item	Date begin	Date end	Part number	Part name	Qty. per model/kit
AN	C102	05-26		4740064	Set screw	2
	C103	05-26		327007 (9005110-4400)	Plug assembly	1
	C104	05-26		327007 (9005110-4400)	Plug assembly	1
	C112	05-26		4740300	Spool	1
	C113	05-26		4740301	Spring guide	1
	C114	05-26		4740061	Spring	1
	C115	05-26		4740062	Spring	1
	C118	05-26		11062214	Adjusting plug assembly (SB-2010-026)	1
	C132	05-26		1701124	Spool	1
	C133	05-26		4740247	Spring guide	1
	C134	05-26		4740051	Spring, PC outer	1
	C135	05-26		4740052	Spring, PC inner	1
	C138	05-26		11062379	Adjusting plug assembly (SB-2010-026)	1
	C138A	05-26		5000656	O-ring	1
	C151	05-26		9007315-0510	Screw	4
	C152	05-26		11150082	Solenoid valve adapter (SB-2016-007)	1
	C153	05-26		327007 (9005110-4400)	Plug assembly	1
	C154	05-26		4740154	Seal ring	2
	C155	05-26		1701291	Coil, 12 volt	1
	C200	05-26		4740154	Seal ring	4
	C300	05-26		5000164 (9007315-0507)	Screw	4
	QC100	05-26		11112229	Control Kit, electric on/off 12 volt, NO (SB-2012-011)	1
	QC120	05-26		11103621	Solenoid valve seal kit	1
	QC125	05-26		11104457	Nut	1
	QC150	05-26		11104461	Solenoid valve kit, 12 volt	1

Control

(AR)

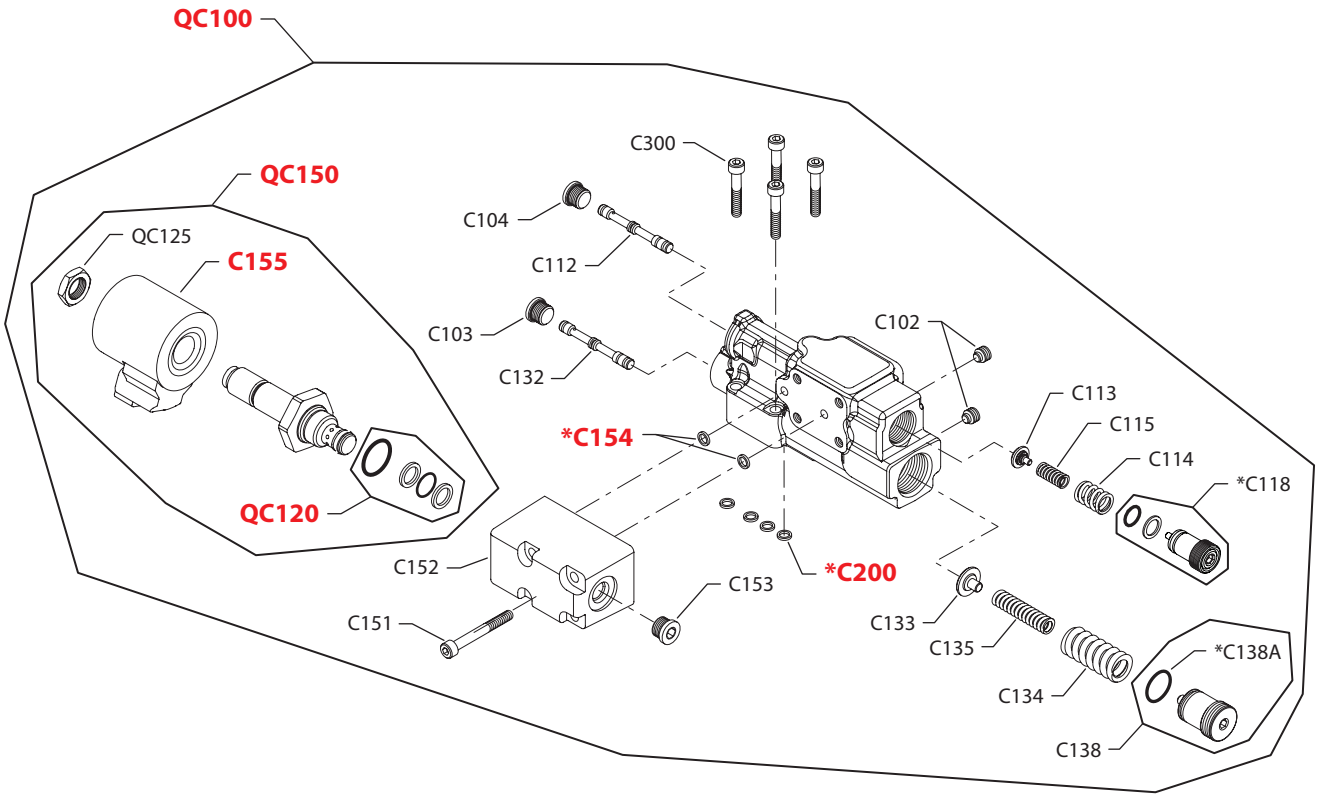

E101 622E

* = included in base motor seal kit Q210

Enlarged **bold** type item numbers are recommended part to stock for servicing.

Control

Electric on/off control

Order code	Item	Date begin	Date end	Part number	Part name	Qty. per model/kit
AR	C102	05-26		4740064	Set screw	2
	C103	05-26		327007 (9005110-4400)	Plug assembly	1
	C104	05-26		327007 (9005110-4400)	Plug assembly	1
	C112	05-26		4740300	Spool	1
	C113	05-26		4740301	Spring guide	1
	C114	05-26		4740061	Spring	1
	C115	05-26		4740062	Spring	1
	C118	05-26		11062214	Adjusting plug assembly (SB-2010-026)	1
	C132	05-26		1701124	Spool	1
	C133	05-26		4740247	Spring guide	1
	C134	05-26		4740051	Spring, PC outer	1
	C135	05-26		4740052	Spring, PC inner	1
	C138	05-26		11062379	Adjusting plug assembly (SB-2010-026)	1
	C138A	05-26		5000656	O-ring	1
	C151	05-26		9007315-0510	Screw	4
	C152	05-26		11150082	Solenoid valve adapter (SB-2016-007)	1
	C153	05-26		327007 (9005110-4400)	Plug assembly	1
	C154	05-26		4740154	Seal ring	2
	C155	05-26		1701291	Coil, 12 volt	1
	C200	05-26		4740154	Seal ring	4
	C300	05-26		5000164 (9007315-0507)	Screw	4
	QC100	05-26		11112220	Control Kit, electric on/off 12 volt, NC (SB-2012-011)	1
	QC120	05-26		11103621	Solenoid valve seal kit	1
	QC125	05-26		11104457	Nut	1
	QC150	05-26		11104463	Solenoid valve kit, 12 volt	1

Control

(AT)

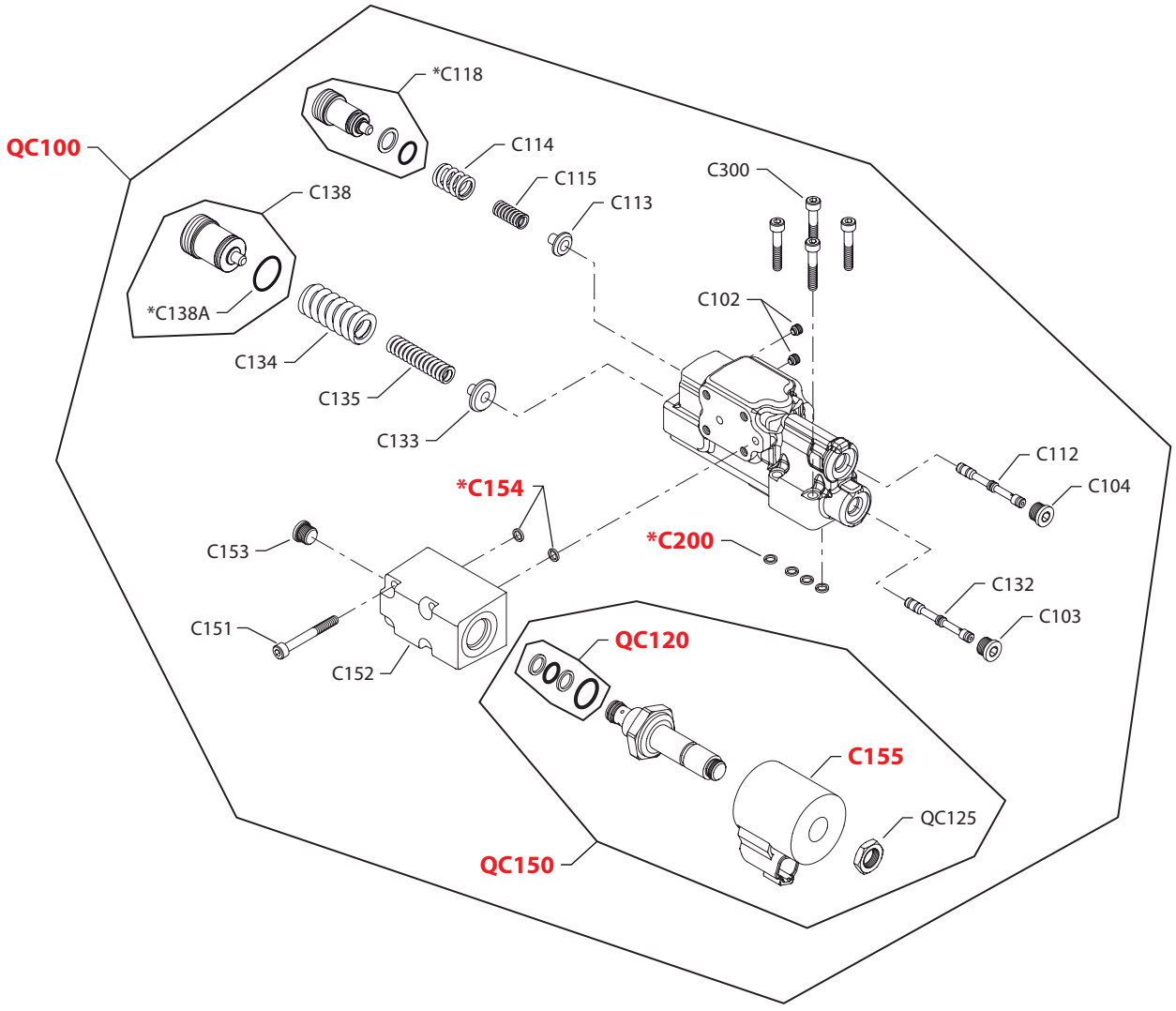

E101 700E

* = included in base motor seal kit Q210

Enlarged **bold** type item numbers are recommended part to stock for servicing.

Control

Electric on/off control

Order code	Item	Date begin	Date end	Part number	Part name	Qty. per model/kit
AT	C102	08-20		4740064	Set screw	2
	C103	08-20		327007 (9005110-4400)	Plug assembly	1
	C104	08-20		327007 (9005110-4400)	Plug assembly	1
	C112	08-20		4740300	Spool	1
	C113	08-20		4740301	Spring guide	1
	C114	08-20		4740061	Spring	1
	C115	08-20		4740062	Spring	1
	C118	08-20		11062214	Adjusting plug assembly (SB-2010-026)	1
	C132	08-20		1701124	Spool	1
	C133	08-20		4740247	Spring guide	1
	C134	08-20		4740051	Spring, PC outer	1
	C135	08-20		4740052	Spring, PC inner	1
	C138	08-20		11062379	Adjusting plug assembly (SB-2010-026)	1
	C138A	08-20		5000656	O-ring	1
	C151	08-20		9007315-0510	Screw	4
	C152	08-20		11150082	Solenoid valve adapter (SB-2016-007)	1
	C153	08-20		327007 (9005110-4400)	Plug assembly	1
	C154	08-20		4740154	Seal ring	2
	C155	08-20		1701563	Coil, 24volt	1
	C200	08-20		4740154	Seal ring	4
	C300	08-20		5000164 (9007315-0507)	Screw	4
	QC100	08-20		11112292	Control Kit, electric on/off, 24 volt, NO (SB-2012-011)	1
	QC120	08-20		11103621	Solenoid valve seal kit	1
	QC125	08-20		11104457	Nut	1
	QC150	08-20		11104462	Solenoid valve kit, 24 volt	1

Control

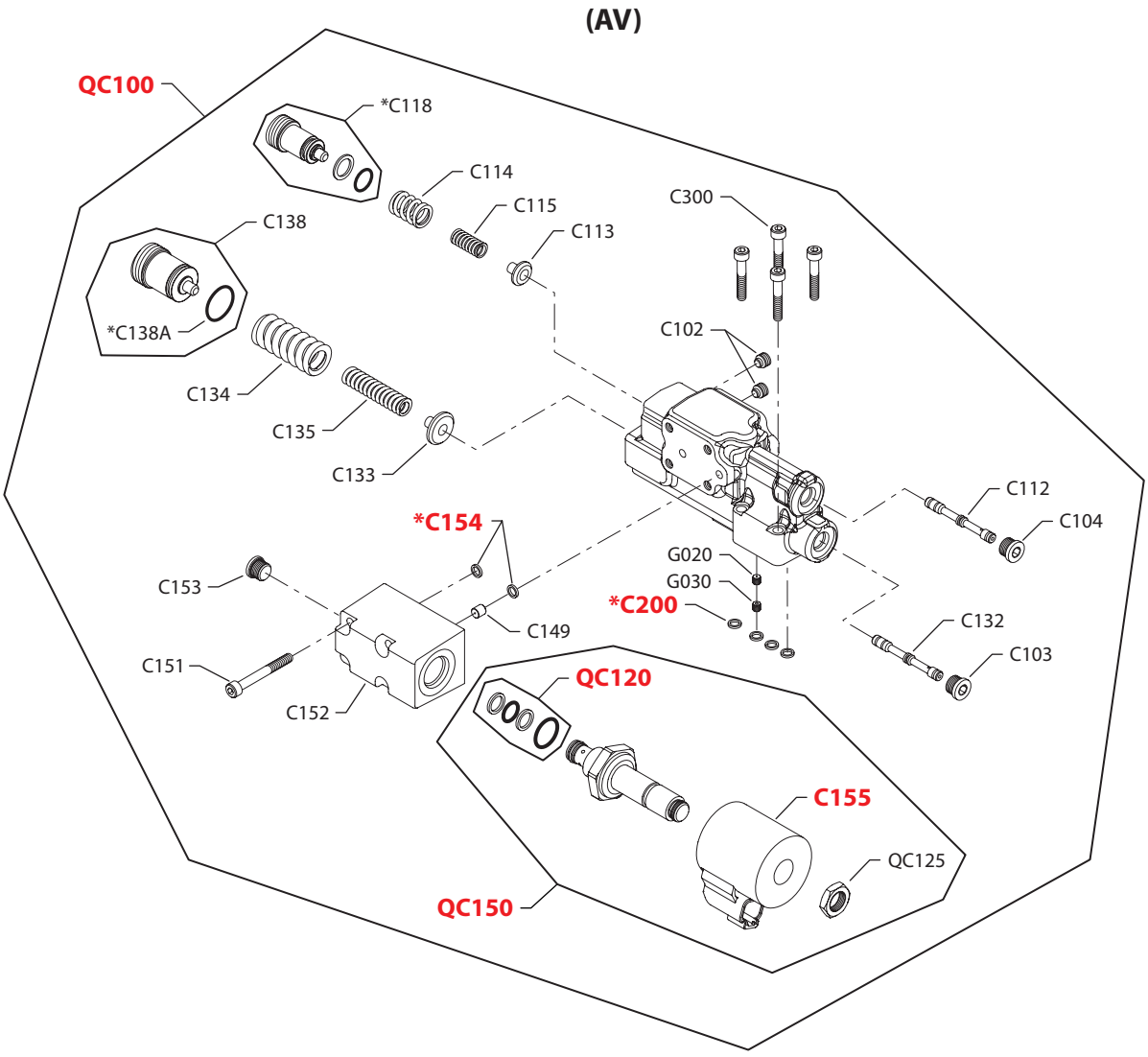

E101 833E

* = included in base motor seal kit Q210

Enlarged **bold** type item numbers are recommended part to stock for servicing.

Control

Electric proportional control

Order code	Item	Date begin	Date end	Part number	Part name	Qty. per model/kit
AV	C102	09-08		4740064	Set screw	2
	C103	09-08		327007 (9005110-4400)	Plug assembly	1
	C104	09-08		327007 (9005110-4400)	Plug assembly	1
	C112	09-08		1701439	Spool	1
	C113	09-08		4740301	Spring guide	1
	C114	09-08		4740061	Spring	1
	C115	09-08		4740062	Spring	1
	C118	09-08		11062214	Adjusting plug assembly (SB-2010-026)	1
	C132	09-08		1701124	Spool	1
	C133	09-08		4740247	Spring guide	1
	C134	09-08		4740051	Spring, PC outer	1
	C135	09-08		4740052	Spring, PC inner	1
	C138	09-08		11062379	Adjusting plug assembly (SB-2010-026)	1
	C138A	09-08		5000656	O-ring	1
	C149	09-08		739144	Orifice plug, 0.8mm	1
	C151	09-08		9007315-0510	Screw	4
	C152	09-08		11150082	Solenoid valve adapter (SB-2016-007)	1
	C153	09-08		327007 (9005110-4400)	Plug assembly	1
	C154	09-08		4740154	Seal ring	2
	C155	09-08		1701291	Coil, 12 volt	1
	C200	09-08		4740154	Seal ring	4
	C300	09-08		5000164 (9007315-0507)	Screw	4
	G020	12-40		739144	Orifice, 0.8mm (SB-2012-011)	1
	G020	12-40		519659	Orifice, 1.0mm (SB-2012-011)	1
	G030	12-40		518215	Orifice plug (SB-2012-011)	1
	QC100	09-08		11112301	Control Kit, electric prop. 12 volt, NC (SB-2012-011)	1
	QC120	09-08		11103621	Solenoid valve seal kit	1
	QC125	09-08		11104460	Nut	1
	QC150	09-08		11104467	Solenoid valve kit, 12 volt	1

Control

(AW)

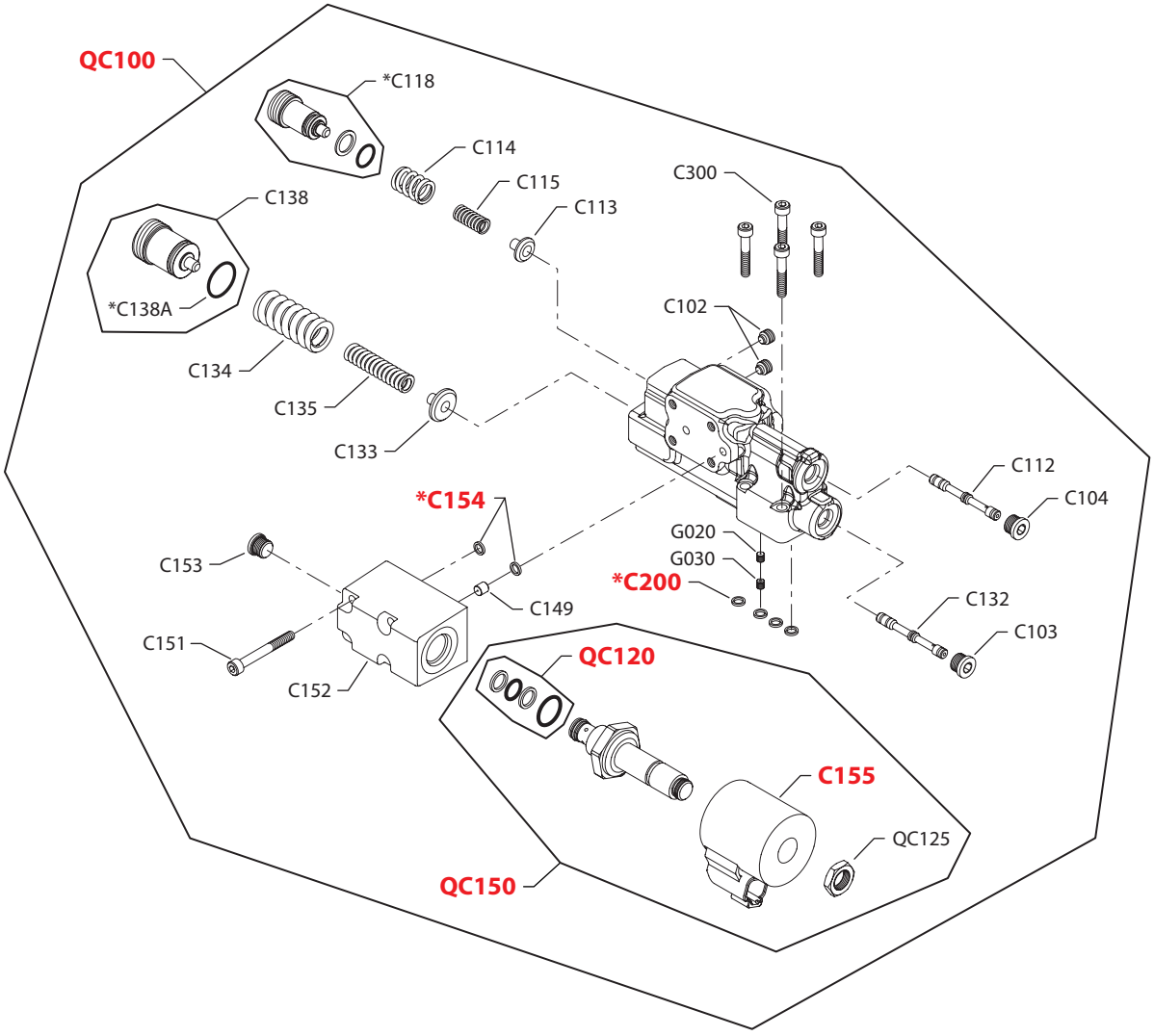

E101 833E

* = included in base motor seal kit Q210

Enlarged **bold** type item numbers are recommended part to stock for servicing.

Control

Electric proportional control

Order code	Item	Date begin	Date end	Part number	Part name	Qty. per model/kit
AW	C102	10-32		4740064	Set screw	2
	C103	10-32		327007 (9005110-4400)	Plug assembly	1
	C104	10-32		327007 (9005110-4400)	Plug assembly	1
	C112	10-32		1701439	Spool	1
	C113	10-32		4740301	Spring guide	1
	C114	10-32		4740061	Spring	1
	C115	10-32		4740062	Spring	1
	C118	10-32		11062214	Adjusting plug assembly (SB-2010-026)	1
	C132	10-32		1701124	Spool	1
	C133	10-32		4740247	Spring guide	1
	C134	10-32		4740051	Spring, PC outer	1
	C135	10-32		4740052	Spring, PC inner	1
	C138	10-32		11062379	Adjusting plug assembly (SB-2010-026)	1
	C138A	10-32		5000656	O-ring	1
	C149	10-32		739144	Orifice plug, 0.8mm	1
	C151	10-32		9007315-0510	Screw	4
	C152	10-32		11150082	Solenoid valve adapter (SB-2016-007)	1
	C153	10-32		327007 (9005110-4400)	Plug assembly	1
	C154	10-32		4740154	Seal ring	2
	C155	10-32		1701291	Coil, 12 volt	1
	C200	10-32		4740154	Seal ring	4
	C300	10-32		5000164 (9007315-0507)	Screw	4
	G020	12-40		739144	Orifice, 0.8mm (SB-2012-011)	1
	G020	12-40		519659	Orifice, 1.0mm (SB-2012-011)	1
	G030	12-40		518215	Orifice plug (SB-2012-011)	1
	QC100	10-32		11112294	Control Kit, electric prop. 12v, NO (SB-2012-011)	1
	QC120	10-32		11103621	Solenoid valve seal kit	1
	QC125	10-32		11104459	Nut	1
	QC150	10-32		11104465	Solenoid valve kit, 12 volt	1

Control

(AX)

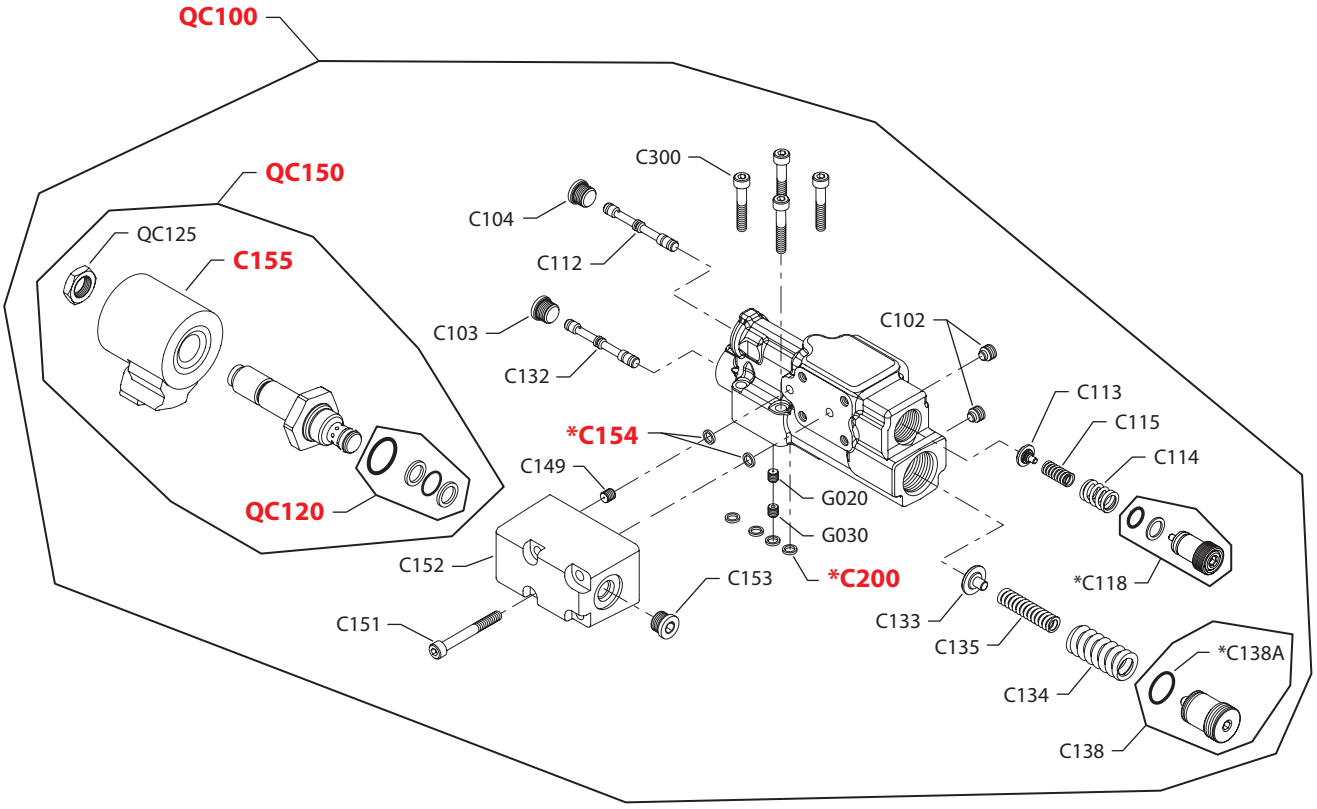

E101 621E

* = included in base motor seal kit Q210

Enlarged **bold** type item numbers are recommended part to stock for servicing.

Control

Electric proportional control

Order code	Item	Date begin	Date end	Part number	Part name	Qty. per model/kit
AX	C102	10-32		4740064	Set screw	2
	C103	10-32		327007 (9005110-4400)	Plug assembly	1
	C104	10-32		327007 (9005110-4400)	Plug assembly	1
	C112	10-32		1701439	Spool	1
	C113	10-32		4740301	Spring guide	1
	C114	10-32		4740061	Spring	1
	C115	10-32		4740062	Spring	1
	C118	10-32		11062214	Adjusting plug assembly (SB-2010-026)	1
	C132	10-32		1701124	Spool	1
	C133	10-32		4740247	Spring guide	1
	C134	10-32		4740051	Spring, PC outer	1
	C135	10-32		4740052	Spring, PC inner	1
	C138	10-32		11062379	Adjusting plug assembly (SB-2010-026)	1
	C138A	10-32		5000656	O-ring	1
	C149	10-32		739144	Orifice plug, 0.8mm	1
	C151	10-32		9007315-0510	Screw	4
	C152	10-32		11150082	Solenoid valve adapter (SB-2016-007)	1
	C153	10-32		327007 (9005110-4400)	Plug assembly	1
	C154	10-32		4740154	Seal ring	2
	C155	10-32		1701291	Coil, 12 volt	1
	C200	10-32		4740154	Seal ring	4
	C300	10-32		5000164 (9007315-0507)	Screw	4
	G020	12-40		739144	Orifice, 0.8mm (SB-2012-011)	1
	G020	12-40		519659	Orifice, 1.0mm (SB-2012-011)	1
	G030	12-40		518215	Orifice plug (SB-2012-011)	1
	QC100	10-32		11112230	Control Kit, electric prop. 12 v, NO (SB-2012-011)	1
	QC120	10-32		11103621	Solenoid valve seal kit	1
	QC125	10-32		11104459	Nut	1
	QC150	10-32		11104465	Solenoid valve kit, 12 volt	1

Control

(AY)

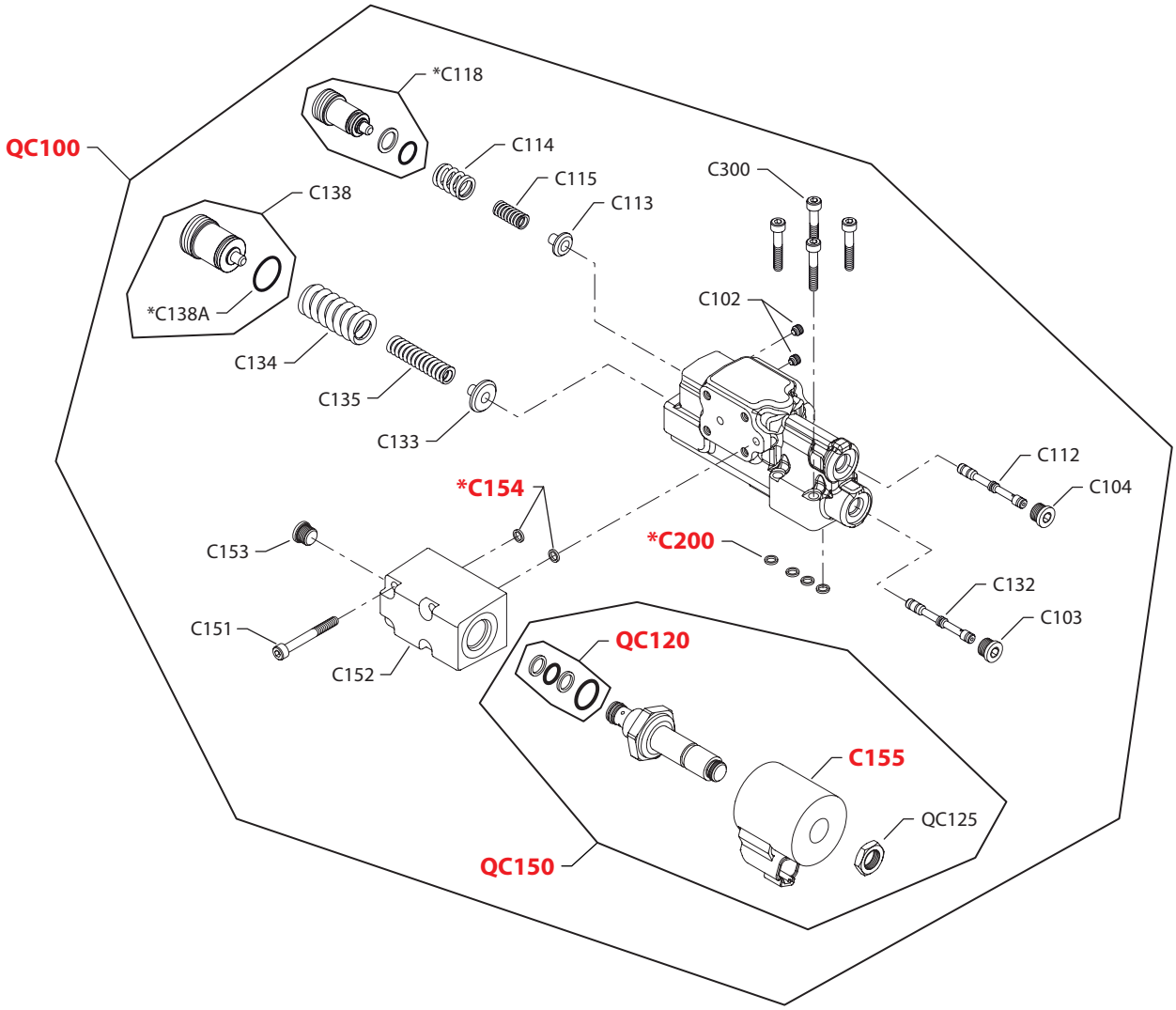

E101 700E

* = included in base motor seal kit Q210

Enlarged **bold** type item numbers are recommended part to stock for servicing.

Control

Electric on/off control

Order code	Item	Date begin	Date end	Part number	Part name	Qty. per model/kit
AY	C102	11-35		4740064	Set screw	2
	C103	11-35		327007 (9005110-4400)	Plug assembly	1
	C104	11-35		327007 (9005110-4400)	Plug assembly	1
	C112	11-35		4740300	Spool	1
	C113	11-35		4740301	Spring guide	1
	C114	11-35		4740061	Spring	1
	C115	11-35		4740062	Spring	1
	C118	11-35		11062214	Adjusting plug assembly (SB-2010-026)	1
	C132	11-35		1701124	Spool	1
	C133	11-35		4740247	Spring guide	1
	C134	11-35		4740051	Spring, PC outer	1
	C135	11-35		4740052	Spring, PC inner	1
	C138	11-35		11062379	Adjusting plug assembly (SB-2010-026)	1
	C138A	11-35		5000656	O-ring	1
	C151	11-35		9007315-0510	Screw	4
	C152	11-35		11150082	Solenoid valve adapter (SB-2016-007)	1
	C153	11-35		327007 (9005110-4400)	Plug assembly	1
	C154	11-35		4740154	Seal ring	2
	C155	11-35		1701563	Coil, 24 volt	1
	C200	11-35		4740154	Seal ring	4
	C300	11-35		5000164 (9007315-0507)	Screw	4
	QC100	11-35		11112303	Control Kit, electric on/off, 24 volt, NC (SB-2012-011)	1
	QC120	11-35		11103621	Solenoid valve seal kit	1
	QC125	11-35		11104457	Nut	1
	QC150	11-35		11104464	Solenoid valve kit, 24 volt	1

Control

(BE & BF)

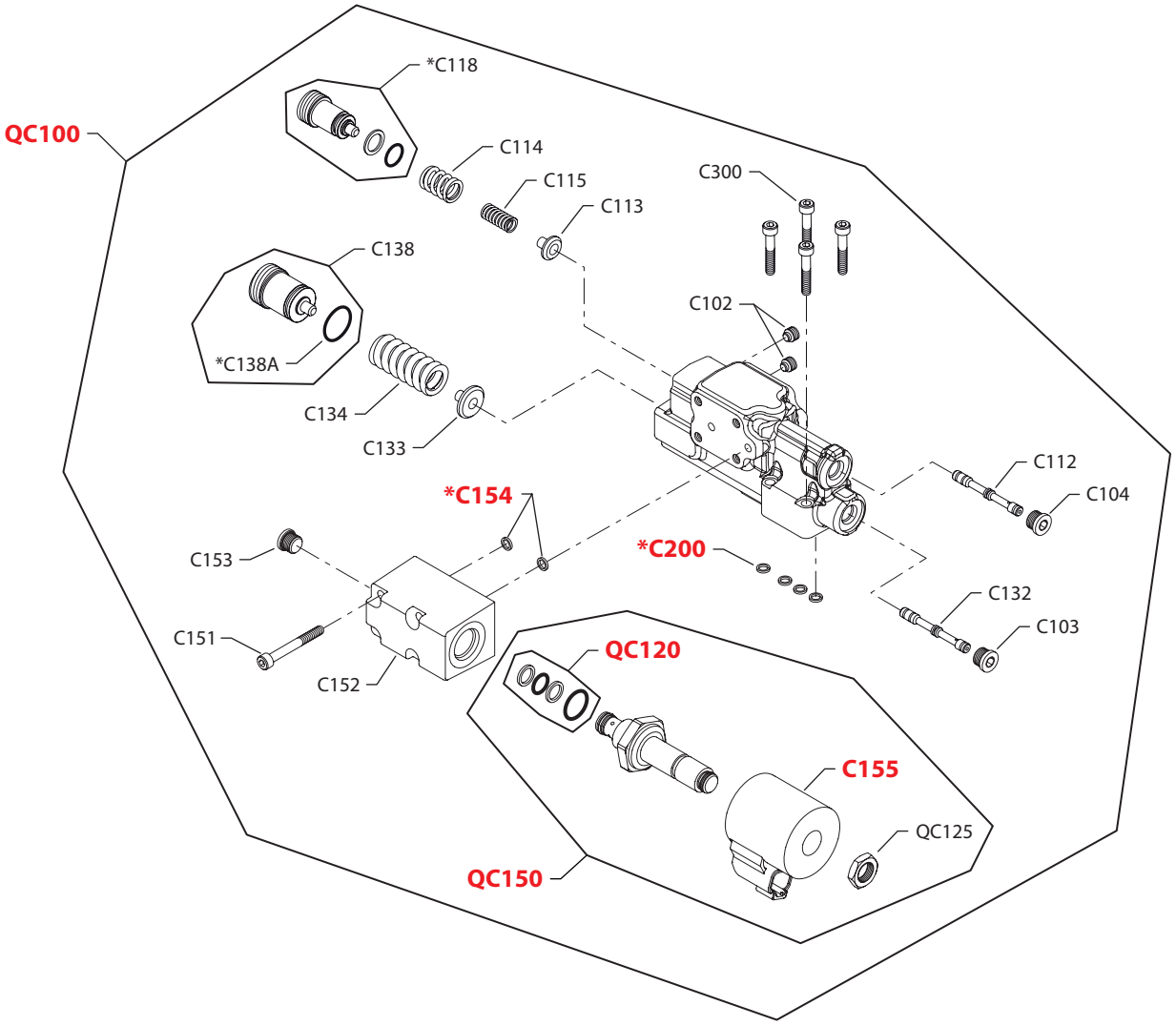

E101 624E

* = included in base motor seal kit Q210

Enlarged **bold** type item numbers are recommended part to stock for servicing.

Control

Electric on/off control

Order code	Item	Date begin	Date end	Part number	Part name	Qty. per model/kit
BE	C102	08-08		4740064	Set screw	2
	C103	08-08		327007 (9005110-4400)	Plug assembly	1
	C104	08-08		327007 (9005110-4400)	Plug assembly	1
	C112	08-08		4740300	Spool	1
	C113	08-08		4740301	Spring guide	1
	C114	08-08		4740061	Spring	1
	C115	08-08		4740062	Spring	1
	C118	08-08		11062214	Adjusting plug assembly (SB-2010-026)	1
	C132	08-08		1701124	Spool	1
	C133	08-08		4740247	Spring guide	1
	C134	08-08		4740324	Spring, heavy	1
	C138	08-08		1700597	Adjusting plug assembly	1
	C138A	08-08		5000656	O-ring	1
	C151	08-08		9007315-0510	Screw	4
	C152	08-08		11150082	Solenoid valve adapter (SB-2016-007)	1
	C153	08-08		327007 (9005110-4400)	Plug assembly	1
	C154	08-08		4740154	Seal ring	2
	C155	08-08		1701291	Coil, 12 volt	1
	C200	08-08		4740154	Seal ring	4
	C300	08-08		5000164 (9007315-0507)	Screw	4
	QC100	08-08		11112299	Control Kit, electric on/off, 12v, high, NC (SB-2012-011)	1
	QC120	08-08		11103621	Solenoid valve seal kit	1
	QC125	08-08		11104457	Nut	1
	QC150	08-08		11104463	Solenoid valve kit, 12 volt	1
BF	C102	08-08		4740064	Set screw	2
	C103	08-08		327007 (9005110-4400)	Plug assembly	1
	C104	08-08		327007 (9005110-4400)	Plug assembly	1
	C112	08-08		4740300	Spool	1
	C113	08-08		4740301	Spring guide	1
	C114	08-08		4740061	Spring	1
	C115	08-08		4740062	Spring	1
	C118	08-08		11062214	Adjusting plug assembly (SB-2010-026)	1
	C132	08-08		1701124	Spool	1
	C133	08-08		4740247	Spring guide	1
	C134	08-08		4740324	Spring, heavy	1
	C138	08-08		1700597	Adjusting plug assembly	1
	C138A	08-08		5000656	O-ring	1
	C151	08-08		9007315-0510	Screw	4
	C152	08-08		11150082	Solenoid valve adapter (SB-2016-007)	1
	C153	08-08		327007 (9005110-4400)	Plug assembly	1
	C154	08-08		4740154	Seal ring	2
	C155	08-08		1701291	Coil, 12 volt	1
	C200	08-08		4740154	Seal ring	4
	C300	08-08		5000164 (9007315-0507)	Screw	4
	QC100	08-08		11112300	Control Kit, electric on/off, 12v, high, NO (SB-2012-011)	1
	QC120	08-08		11103621	Solenoid valve seal kit	1
	QC125	08-08		11104457	Nut	1
	QC150	08-08		11104461	Solenoid valve kit, 12 volt	1

Control

(BG)

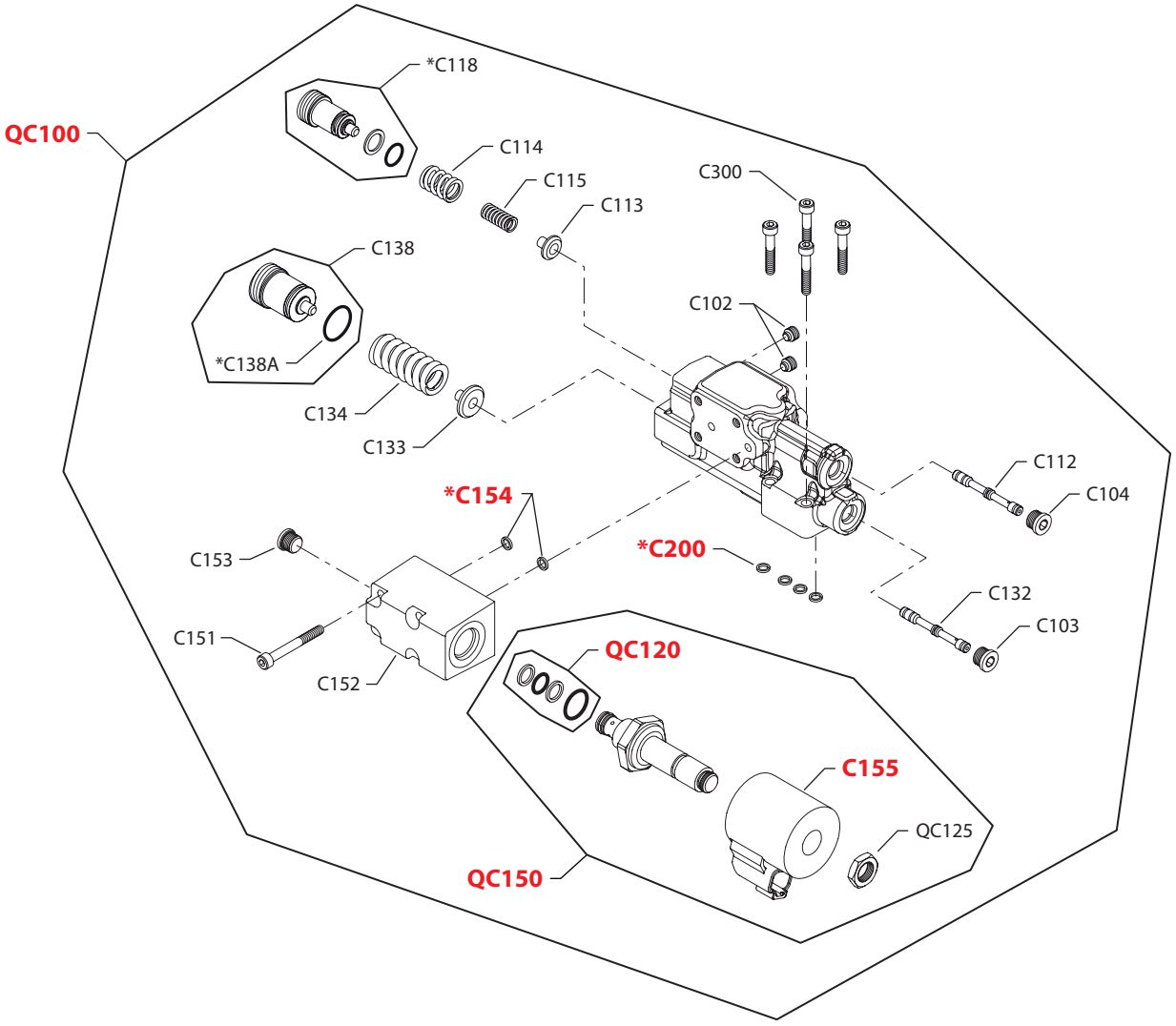

E101 624E

* = included in base motor seal kit Q210

Enlarged **bold** type item numbers are recommended part to stock for servicing.

Control

Electric on/off control

Order code	Item	Date begin	Date end	Part number	Part name	Qty. per model/kit
BG	C102	06-48		4740064	Set screw	2
	C103	06-48		327007 (9005110-4400)	Plug assembly	1
	C104	06-48		327007 (9005110-4400)	Plug assembly	1
	C112	06-48		4740300	Spool	1
	C113	06-48		4740301	Spring guide	1
	C114	06-48		4740061	Spring	1
	C115	06-48		4740062	Spring	1
	C118	06-48		11062214	Adjusting plug assembly (SB-2010-026)	1
	C132	06-48		1701124	Spool	1
	C133	06-48		4740247	Spring guide	1
	C134	06-48		4740324	Spring, heavy	1
	C138	06-48		1700597	Adjusting plug assembly	1
	C138A	06-48		5000656	O-ring	1
	C151	06-48		9007315-0510	Screw	4
	C152	06-48		11150082	Solenoid valve adapter (SB-2016-007)	1
	C153	06-48		327007 (9005110-4400)	Plug assembly	1
	C154	06-48		4740154	Seal ring	2
	C155	06-48		1701563	Coil, 24 volt	1
	C200	06-48		4740154	Seal ring	4
	C300	06-48		5000164 (9007315-0507)	Screw	4
	QC100	06-48		11112289	Control Kit, electric on/off, 24v, high, NC (SB-2012-011)	1
	QC120	06-48		11103621	Solenoid valve seal kit	1
	QC125	06-48		11104457	Nut	1
	QC150	06-48		11104464	Solenoid valve kit, 24 volt	1

Control

(BH)

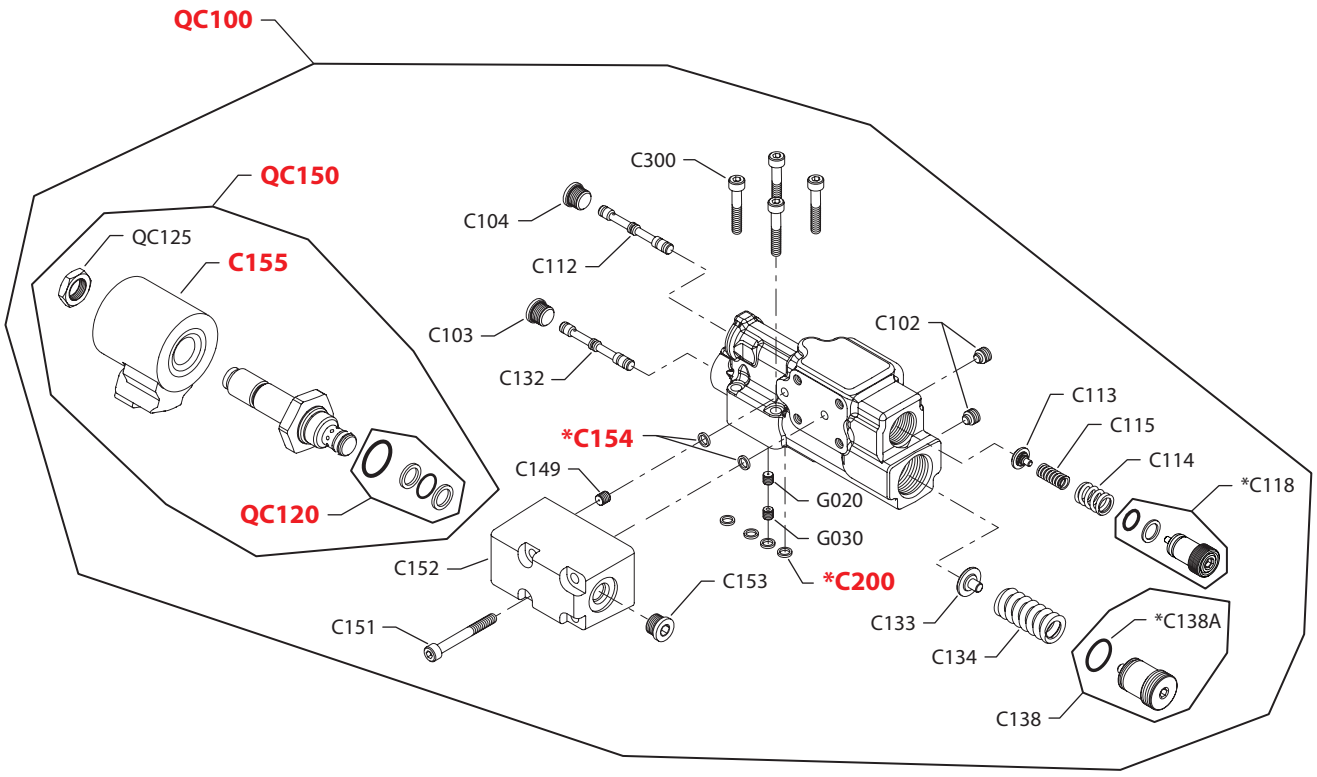

E101 831E

* = included in base motor seal kit Q210

Enlarged **bold** type item numbers are recommended part to stock for servicing.

Control

Electric proportional control

Order code	Item	Date begin	Date end	Part number	Part name	Qty. per model/kit
BH	C102	11-51		4740064	Set screw	2
	C103	11-51		327007 (9005110-4400)	Plug assembly	1
	C104	11-51		327007 (9005110-4400)	Plug assembly	1
	C112	11-51		1701439	Spool	1
	C113	11-51		4740301	Spring guide	1
	C114	11-51		4740061	Spring	1
	C115	11-51		4740062	Spring	1
	C118	11-51		11062214	Adjusting plug assembly (SB-2010-026)	1
	C132	11-51		1701124	Spool	1
	C133	11-51		4740247	Spring guide	1
	C134	11-51		4740324	Spring, PC heavy	1
	C138	11-51		1700597	Adjusting plug assembly	1
	C138A	11-51		5000656	O-ring	1
	C149	11-51		739144	Orifice plug, 0.8mm	1
	C151	11-51		9007315-0510	Screw	4
	C152	11-51		11150082	Solenoid valve adapter (SB-2016-007)	1
	C153	11-51		327007 (9005110-4400)	Plug assembly	1
	C154	11-51		4740154	Seal ring	2
	C155	11-51		1701291	Coil, 12 volt	1
	C200	11-51		4740154	Seal ring	4
	C300	11-51		5000164 (9007315-0507)	Screw	4
	G020	12-40		739144	Orifice, 0.8mm (SB-2012-011)	1
	G020	12-40		519659	Orifice, 1.0mm (SB-2012-011)	1
	G030	12-40		518215	Orifice plug (SB-2012-011)	1
	QC100	11-51		11112216	Control Kit, electric prop. 12 v, high, NC (SB-2012-011)	1
	QC120	11-51		11103621	Solenoid valve seal kit	1
	QC125	11-51		11104460	Nut	1
	QC150	11-51		11104467	Solenoid valve kit, 12 volt	1

Control

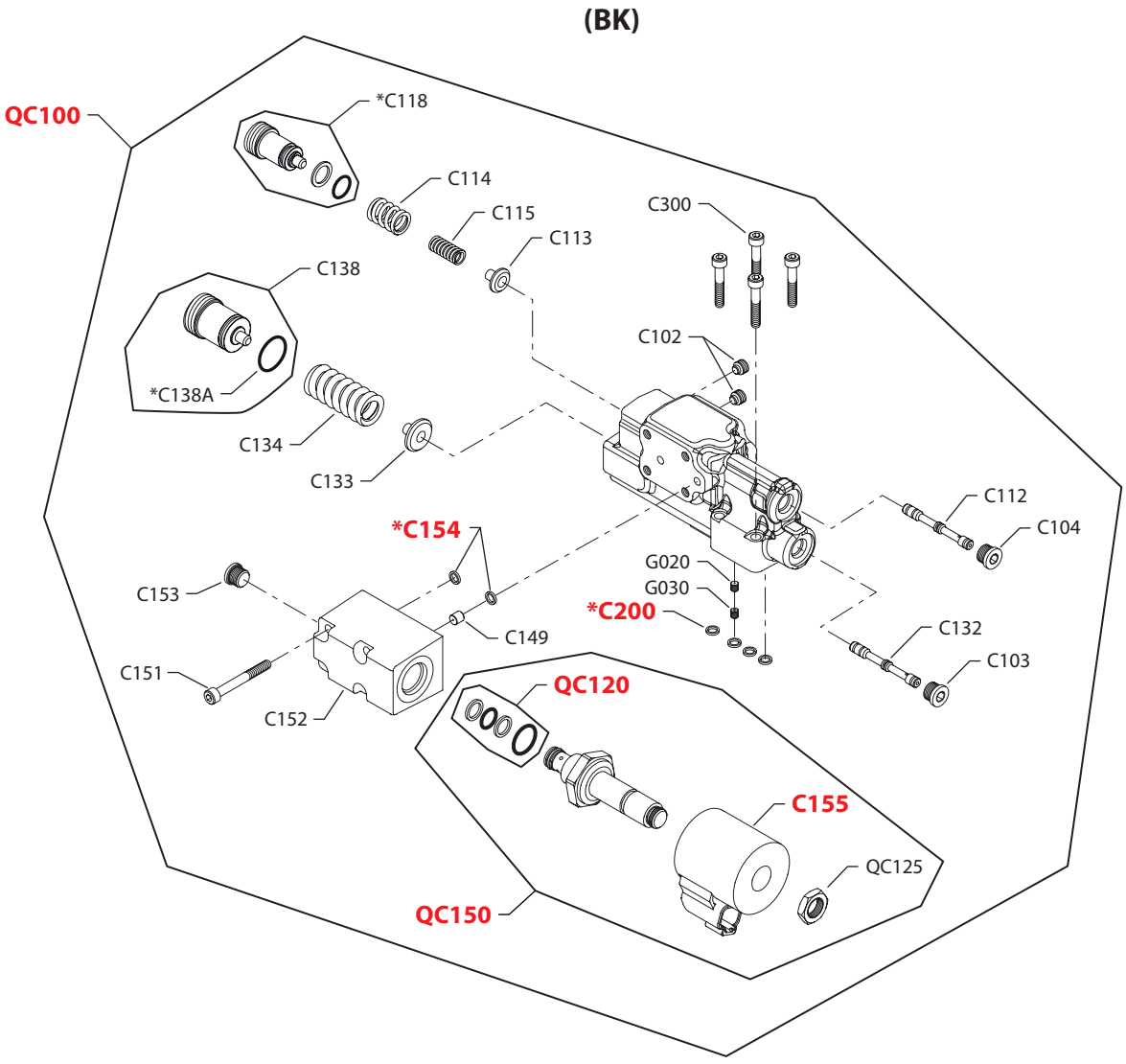

E101 834E

* = included in base motor seal kit Q210

Enlarged **bold** type item numbers are recommended part to stock for servicing.

Control

Electric proportional control

Order code	Item	Date begin	Date end	Part number	Part name	Qty. per model/kit
BK	C102	08-38		4740064	Set screw	2
	C103	08-38		327007 (9005110-4400)	Plug assembly	1
	C104	08-38		327007 (9005110-4400)	Plug assembly	1
	C112	08-38		1701439	Spool	1
	C113	08-38		4740301	Spring guide	1
	C114	08-38		4740061	Spring	1
	C115	08-38		4740062	Spring	1
	C118	08-38		11062214	Adjusting plug assembly (SB-2010-026)	1
	C132	08-38		1701124	Spool	1
	C133	08-38		4740247	Spring guide	1
	C134	08-38		4740324	Spring, heavy	1
	C138	08-38		1700597	Adjusting plug assembly	1
	C138A	08-38		5000656	O-ring	1
	C149	08-38		739144	Orifice plug, 0.8mm	1
	C151	08-38		9007315-0510	Screw	4
	C152	08-38		11150082	Solenoid valve adapter (SB-2016-007)	1
	C153	08-38		327007 (9005110-4400)	Plug assembly	1
	C154	08-38		4740154	Seal ring	2
	C155	08-38		1701563	Coil, 24 volt	1
	C200	08-38		4740154	Seal ring	4
	C300	08-38		5000164 (9007315-0507)	Screw	4
	G020	12-40		739144	Orifice, 0.8mm (SB-2012-011)	1
	G020	12-40		519659	Orifice, 1.0mm (SB-2012-011)	1
	G030	12-40		518215	Orifice plug (SB-2012-011)	1
	QC100	08-38		11112302	Control Kit, electric prop., 24 v, high, NC (SB-2012-011)	1
	QC120	08-38		11103621	Solenoid valve seal kit	1
	QC125	08-38		11104460	Nut	1
	QC150	08-38		11104468	Solenoid valve kit, 24 volt	1

Control

(BL)

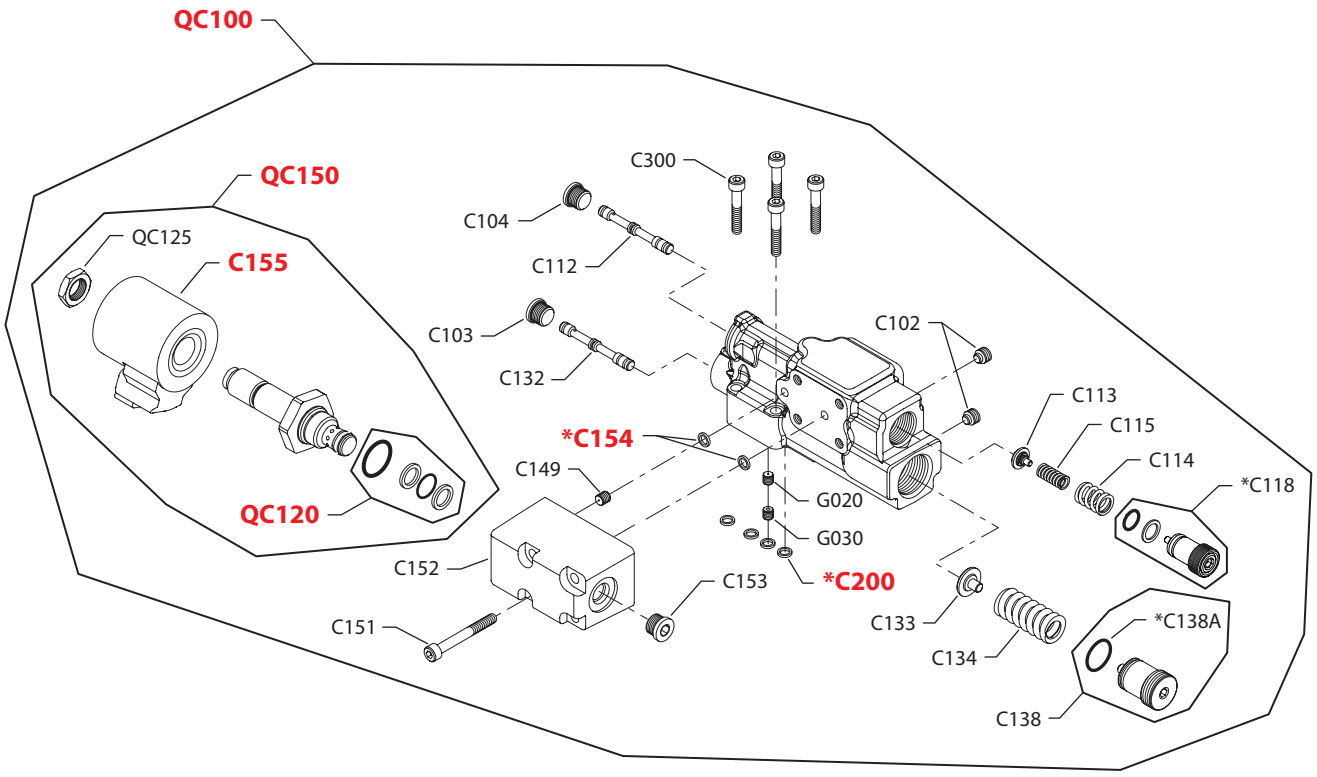

E101 831E

* = included in base motor seal kit Q210

Enlarged **bold** type item numbers are recommended part to stock for servicing.

Control

Electric proportional control

Order code	Item	Date begin	Date end	Part number	Part name	Qty. per model/kit
BL	C102	11-35		4740064	Set screw	2
	C103	11-35		327007 (9005110-4400)	Plug assembly	1
	C104	11-35		327007 (9005110-4400)	Plug assembly	1
	C112	11-35		1701439	Spool	1
	C113	11-35		4740301	Spring guide	1
	C114	11-35		4740061	Spring	1
	C115	11-35		4740062	Spring	1
	C118	11-35		11062214	Adjusting plug assembly (SB-2010-026)	1
	C132	11-35		1701124	Spool	1
	C133	11-35		4740247	Spring guide	1
	C134	11-35		4740324	Spring, PC heavy	1
	C138	11-35		1700597	Adjusting plug assembly	1
	C138A	11-35		5000656	O-ring	1
	C149	11-35		739144	Orifice plug, 0.8mm	1
	C151	11-35		9007315-0510	Screw	4
	C152	11-35		11150082	Solenoid valve adapter (SB-2016-007)	1
	C153	11-35		327007 (9005110-4400)	Plug assembly	1
	C154	11-35		4740154	Seal ring	2
	C155	11-35		1701563	Coil, 24 volt	1
	C200	11-35		4740154	Seal ring	4
	C300	11-35		5000164 (9007315-0507)	Screw	4
	G020	12-40		739144	Orifice, 0.8mm (SB-2012-011)	1
	G020	12-40		519659	Orifice, 1.0mm (SB-2012-011)	1
	G030	12-40		518215	Orifice plug (SB-2012-011)	1
	QC100	11-35		11112224	Control Kit, electric prop 24 v, high, NC (SB-2012-011)	1
	QC120	11-35		11103621	Solenoid valve seal kit	1
	QC125	11-35		11104460	Nut	1
	QC150	11-35		11104468	Solenoid valve kit, 24 volt	1

Control

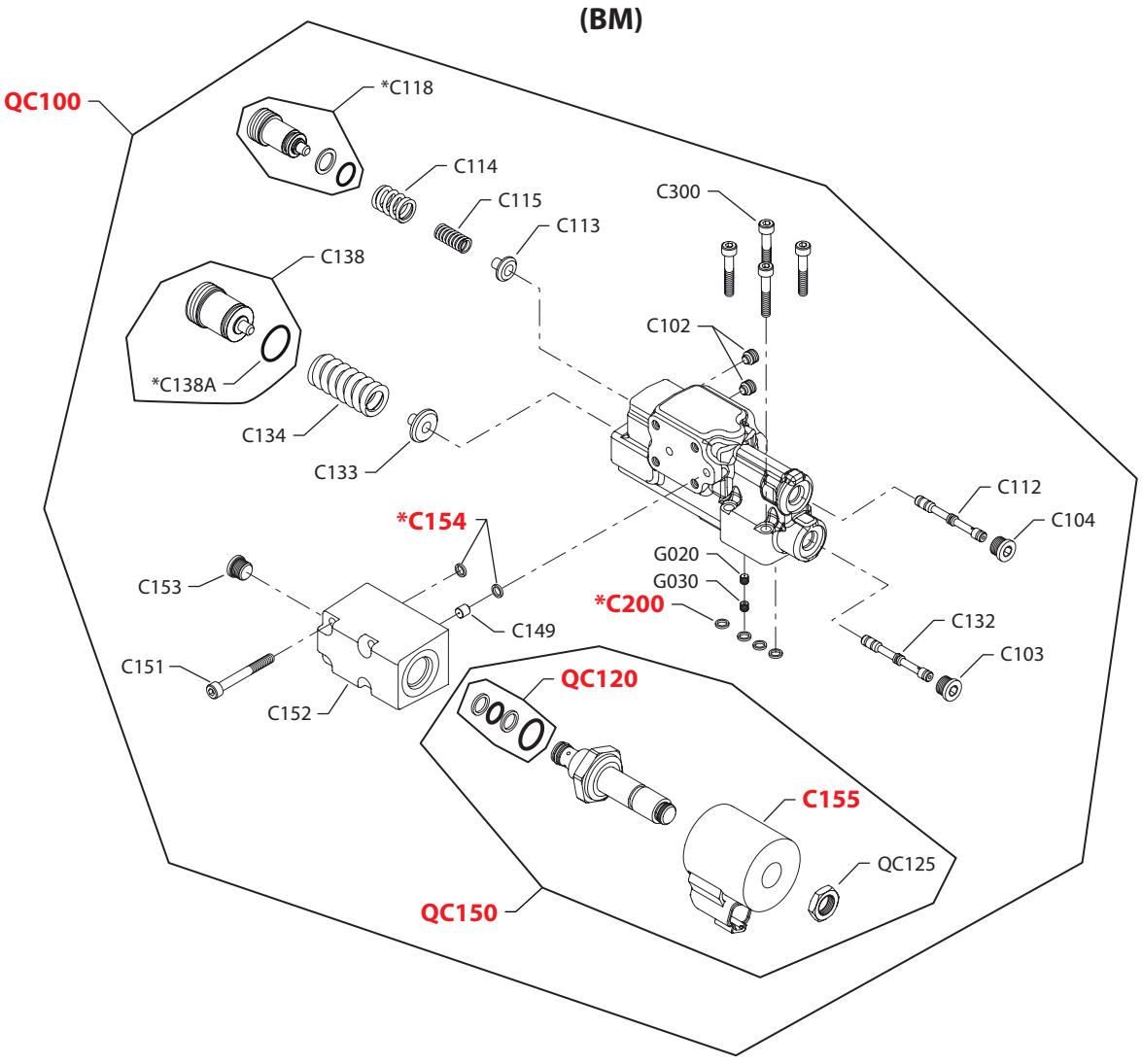

E101 834E

* = included in base motor seal kit Q210

Enlarged **bold** type item numbers are recommended part to stock for servicing.

Control

Electric proportional control

Order code	Item	Date begin	Date end	Part number	Part name	Qty. per model/kit
BM	C102	11-51		4740064	Set screw	2
	C103	11-51		327007 (9005110-4400)	Plug assembly	1
	C104	11-51		327007 (9005110-4400)	Plug assembly	1
	C112	11-51		1701439	Spool	1
	C113	11-51		4740301	Spring guide	1
	C114	11-51		4740061	Spring	1
	C115	11-51		4740062	Spring	1
	C118	11-51		11062214	Adjusting plug assembly (SB-2010-026)	1
	C132	11-51		1701124	Spool	1
	C133	11-51		4740247	Spring guide	1
	C134	11-51		4740324	Spring, heavy	1
	C138	11-51		1700597	Adjusting plug assembly	1
	C138A	11-51		5000656	O-ring	1
	C149	11-51		739144	Orifice plug, 0.8mm	1
	C151	11-51		9007315-0510	Screw	4
	C152	11-51		11150082	Solenoid valve adapter (SB-2016-007)	1
	C153	11-51		327007 (9005110-4400)	Plug assembly	1
	C154	11-51		4740154	Seal ring	2
	C155	11-51		1701291	Coil, 24 volt	1
	C200	11-51		4740154	Seal ring	4
	C300	11-51		5000164 (9007315-0507)	Screw	4
	G020	12-40		739144	Orifice, 0.8mm (SB-2012-011)	1
	G020	12-40		519659	Orifice, 1.0mm (SB-2012-011)	1
	G030	12-40		518215	Orifice plug (SB-2012-011)	1
	QC100	11-51		11112298	Control Kit, electric prop, 12 v, high, NC (SB-2012-011)	1
	QC120	11-51		11103621	Solenoid valve seal kit	1
	QC125	11-51		11104460	Nut	1
	QC150	11-51		11104467	Solenoid valve kit, 12 volt	1

Control

(BN & BR)

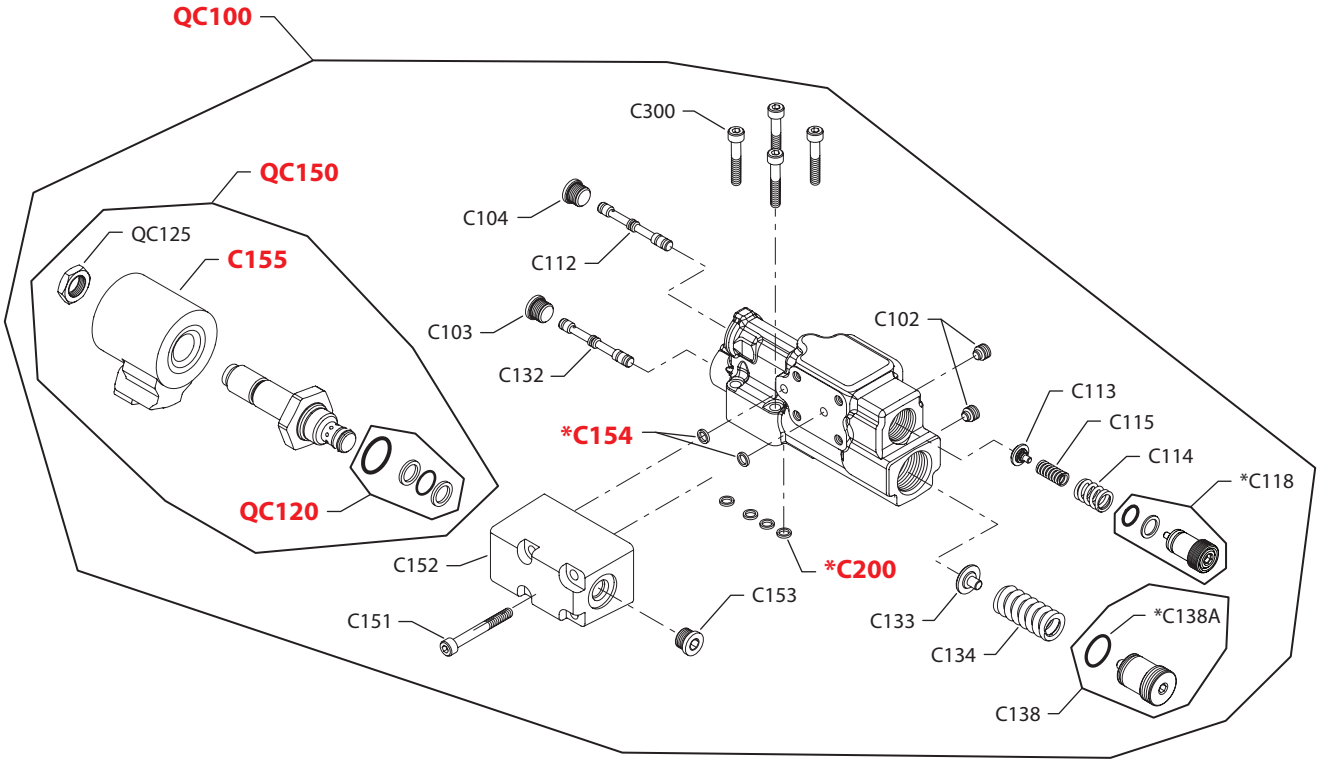

E101 831E

* = included in base motor seal kit Q210

Enlarged **bold** type item numbers are recommended part to stock for servicing.

Control

Electric on/off control

Order code	Item	Date begin	Date end	Part number	Part name	Qty. per model/kit
BN	C102	08-08		4740064	Set screw	2
	C103	08-08		327007 (9005110-4400)	Plug assembly	1
	C104	08-08		327007 (9005110-4400)	Plug assembly	1
	C112	08-08		4740300	Spool	1
	C113	08-08		4740301	Spring guide	1
	C114	08-08		4740061	Spring	1
	C115	08-08		4740062	Spring	1
	C118	08-08		11062214	Adjusting plug assembly (SB-2010-026)	1
	C132	08-08		1701124	Spool	1
	C133	08-08		4740247	Spring guide	1
	C134	08-08		4740324	Spring, PC heavy	1
	C138	08-08		1700597	Adjusting plug assembly	1
	C138A	08-08		5000656	O-ring	1
	C151	08-08		9007315-0510	Screw	4
	C152	08-08		11150082	Solenoid valve adapter (SB-2016-007)	1
	C153	08-08		327007 (9005110-4400)	Plug assembly	1
	C154	08-08		4740154	Seal ring	2
	C155	08-08		1701291	Coil, 12 volt	1
	C200	08-08		4740154	Seal ring	4
	C300	08-08		5000164 (9007315-0507)	Screw	4
	QC100	08-08		11112222	Control Kit, electric on/off, 12v, high, NO (SB-2012-011)	1
	QC120	08-08		11103621	Solenoid valve seal kit	1
	QC125	08-08		11104457	Nut	1
	QC150	08-08		11104461	Solenoid valve kit, 12 volt	1
BR	C102	08-08		4740064	Set screw	2
	C103	08-08		327007 (9005110-4400)	Plug assembly	1
	C104	08-08		327007 (9005110-4400)	Plug assembly	1
	C112	08-08		4740300	Spool	1
	C113	08-08		4740301	Spring guide	1
	C114	08-08		4740061	Spring	1
	C115	08-08		4740062	Spring	1
	C118	08-08		11062214	Adjusting plug assembly (SB-2010-026)	1
	C132	08-08		1701124	Spool	1
	C133	08-08		4740247	Spring guide	1
	C134	08-08		4740324	Spring, PC heavy	1
	C138	08-08		1700597	Adjusting plug assembly	1
	C138A	08-08		5000656	O-ring	1
	C151	08-08		9007315-0510	Screw	4
	C152	08-08		11150082	Solenoid valve adapter (SB-2016-007)	1
	C153	08-08		327007 (9005110-4400)	Plug assembly	1
	C154	08-08		4740154	Seal ring	2
	C155	08-08		1701291	Coil, 12 volt	1
	C200	08-08		4740154	Seal ring	4
	C300	08-08		5000164 (9007315-0507)	Screw	4
	QC100	08-08		11112219	Control Kit, electric on/off, 12v, high, NC (SB-2012-011)	1
	QC120	08-08		11103621	Solenoid valve seal kit	1
	QC125	08-08		11104457	Nut	1
	QC150	08-08		11104463	Solenoid valve kit, 12 volt	1

Control

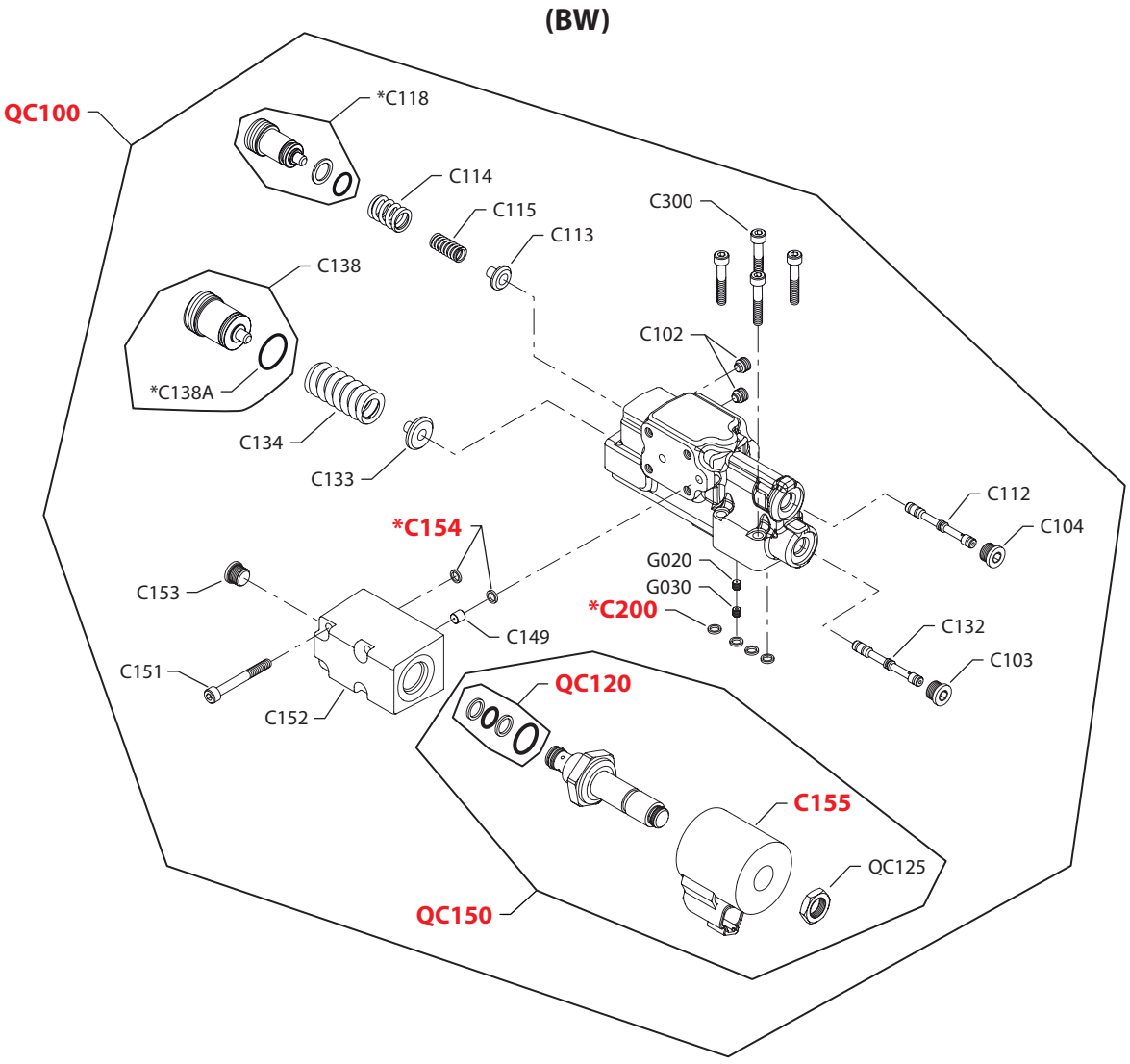

E101 834E

* = included in base motor seal kit Q210

Enlarged **bold** type item numbers are recommended part to stock for servicing.

Control

Electric proportional control

Order code	Item	Date begin	Date end	Part number	Part name	Qty. per model/kit
BW	C102	11-51		4740064	Set screw	2
	C103	11-51		327007 (9005110-4400)	Plug assembly	1
	C104	11-51		327007 (9005110-4400)	Plug assembly	1
	C112	11-51		1701439	Spool	1
	C113	11-51		4740301	Spring guide	1
	C114	11-51		4740061	Spring	1
	C115	11-51		4740062	Spring	1
	C118	11-51		11062214	Adjusting plug assembly	1
	C132	11-51		1701124	Spool	1
	C133	11-51		4740247	Spring guide	1
	C134	11-51		4740324	Spring, heavy	1
	C138	11-51		1700597	Adjusting plug assembly	1
	C138A	11-51		5000656	O-ring	1
	C149	11-51		739144	Orifice plug, 0.8mm	1
	C151	11-51		9007315-0510	Screw	4
	C152	11-51		11150082	Solenoid valve adapter (SB-2016-007)	1
	C153	11-51		327007 (9005110-4400)	Plug assembly	1
	C154	11-51		4740154	Seal ring	2
	C155	11-51		1701291	Coil, 12 volt	1
	C200	11-51		4740154	Seal ring	4
	C300	11-51		5000164 (9007315-0507)	Screw	4
	G020	12-40		739144	Orifice, 0.8mm (SB-2012-011)	1
	G020	12-40		519659	Orifice, 1.0mm (SB-2012-011)	1
	G030	12-40		518215	Orifice plug (SB-2012-011)	1
	QC100	11-51		11112293	Control Kit, electric prop, 12v, high, NO (SB-2012-011)	1
	QC120	11-51		11103621	Solenoid valve seal kit	1
	QC125	11-51		11104459	Nut	1
	QC150	11-51		11104465	Solenoid valve kit, 12 volt	1

Control

(BX)

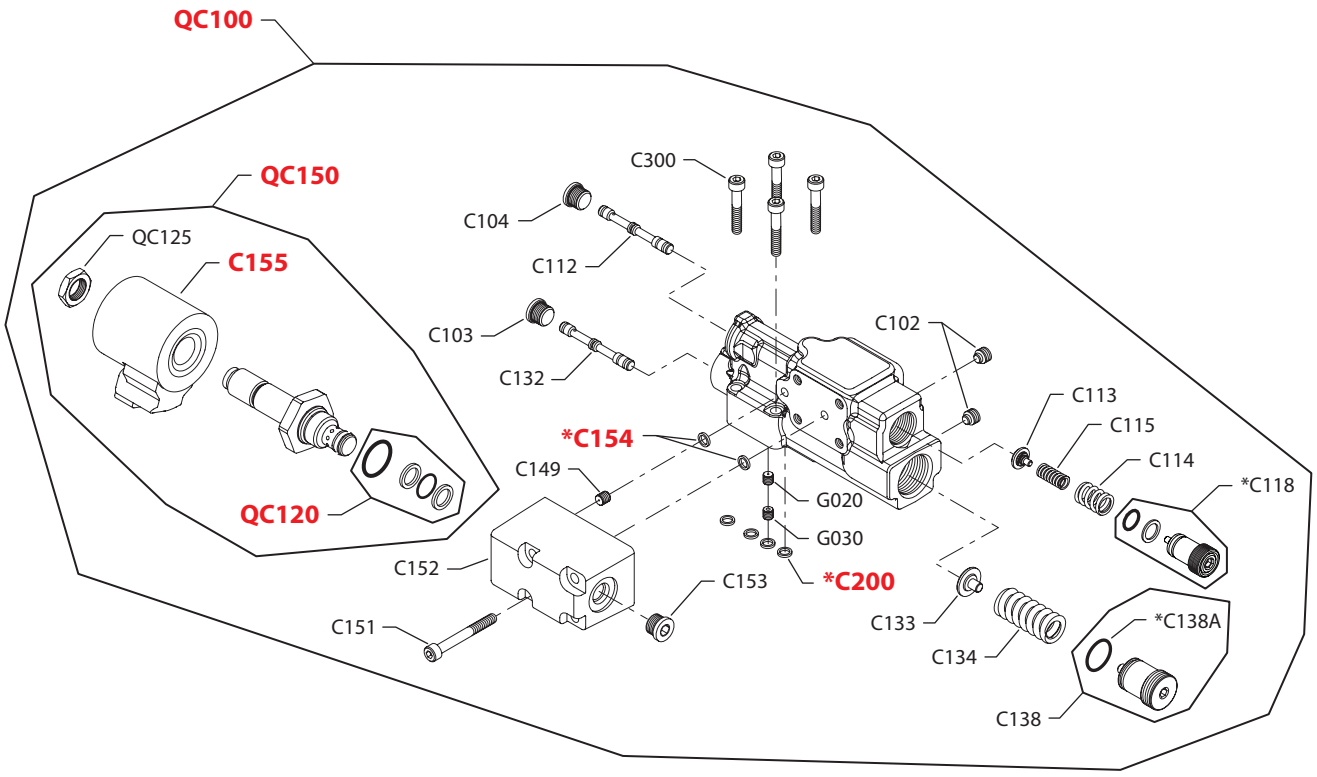

E101 831E

* = included in base motor seal kit Q210

Enlarged **bold** type item numbers are recommended part to stock for servicing.

Control

Electric proportional control

Order code	Item	Date begin	Date end	Part number	Part name	Qty. per model/kit
BX	C102	11-35		4740064	Set screw	2
	C103	11-35		327007 (9005110-4400)	Plug assembly	1
	C104	11-35		327007 (9005110-4400)	Plug assembly	1
	C112	11-35		1701439	Spool	1
	C113	11-35		4740301	Spring guide	1
	C114	11-35		4740061	Spring	1
	C115	11-35		4740062	Spring	1
	C118	11-35		11062214	Adjusting plug assembly (SB-2010-026)	1
	C132	11-35		1701124	Spool	1
	C133	11-35		4740247	Spring guide	1
	C134	11-35		4740324	Spring, PC heavy	1
	C138	11-35		1700597	Adjusting plug assembly	1
	C138A	11-35		5000656	O-ring	1
	C149	11-35		739144	Orifice plug, 0.8mm	1
	C151	11-35		9007315-0510	Screw	4
	C152	11-35		11150082	Solenoid valve adapter (SB-2016-007)	1
	C153	11-35		327007 (9005110-4400)	Plug assembly	1
	C154	11-35		4740154	Seal ring	2
	C155	11-35		1701291	Coil, 12 volt	1
	C200	11-35		4740154	Seal ring	4
	C300	11-35		5000164 (9007315-0507)	Screw	4
	G020	12-40		739144	Orifice, 0.8mm (SB-2012-011)	1
	G020	12-40		519659	Orifice, 1.0mm (SB-2012-011)	1
	G030	12-40		518215	Orifice plug (SB-2012-011)	1
	QC100	11-35		11112214	Control Kit, electric prop 12 v, high, NO (SB-2012-011)	1
	QC120	11-35		11103621	Solenoid valve seal kit	1
	QC125	11-35		11104459	Nut	1
	QC150	11-35		11104465	Solenoid valve kit, 12 volt	1

Control

(CG)

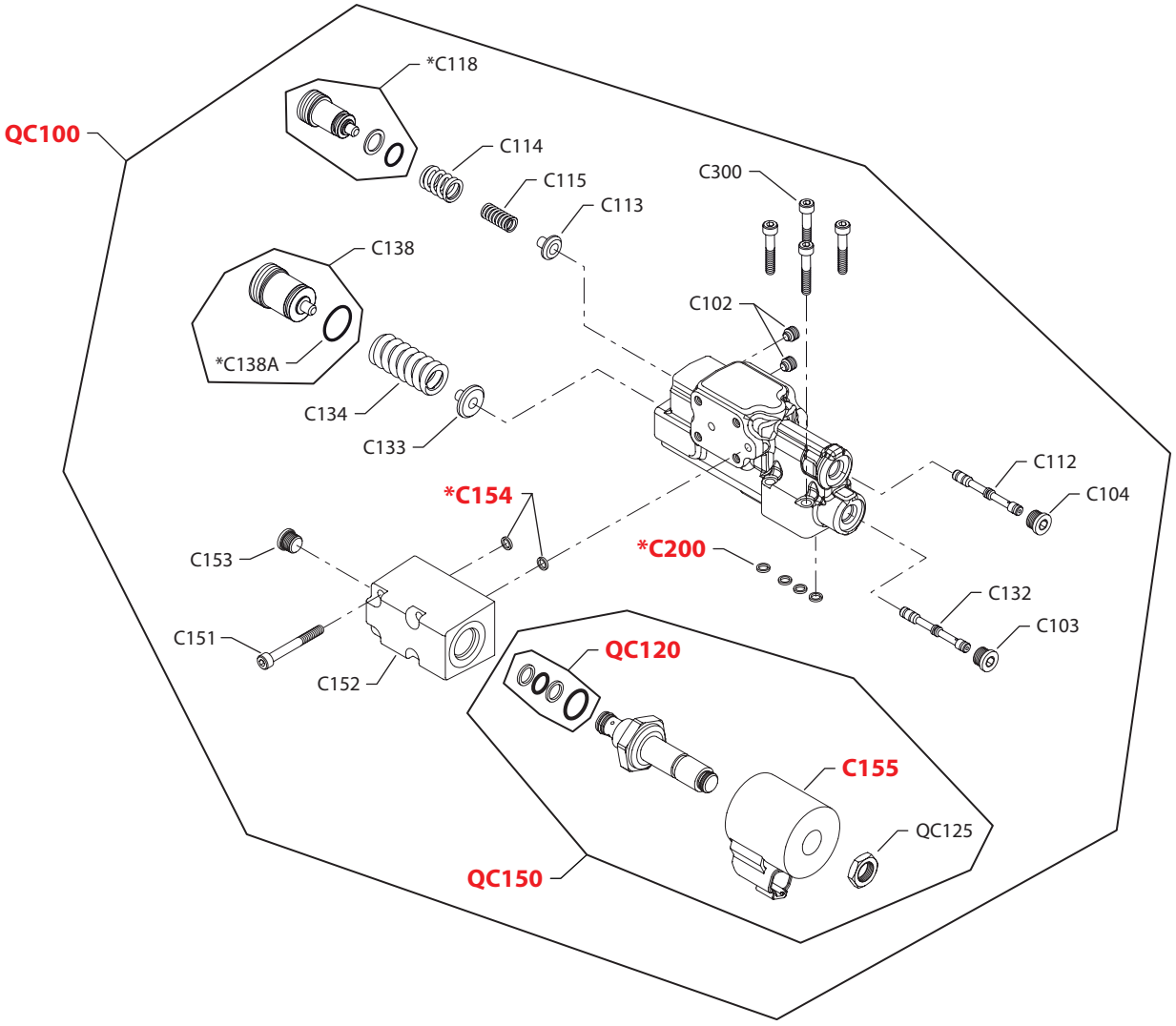

E101 624E

* = included in base motor seal kit Q210

Enlarged **bold** type item numbers are recommended part to stock for servicing.

Control

Electric on/off control

Order code	Item	Date begin	Date end	Part number	Part name	Qty. per model/kit
CG	C102	12-19		4740064	Set screw	2
	C103	12-19		327007 (9005110-4400)	Plug assembly	1
	C104	12-19		327007 (9005110-4400)	Plug assembly	1
	C112	12-19		4740300	Spool	1
	C113	12-19		4740301	Spring guide	1
	C114	12-19		4740061	Spring	1
	C115	12-19		4740062	Spring	1
	C118	12-19		11062214	Adjusting plug assembly (SB-2010-026)	1
	C132	12-19		1701124	Spool	1
	C133	12-19		4740247	Spring guide	1
	C134	12-19		4740318	Spring, light	1
	C138	12-19		1700597	Adjusting plug assembly	1
	C138A	12-19		5000656	O-ring	1
	C151	12-19		9007315-0510	Screw	4
	C152	12-19		11150082	Solenoid valve adapter (SB-2016-007)	1
	C153	12-19		327007 (9005110-4400)	Plug assembly	1
	C154	12-19		4740154	Seal ring	2
	C155	12-19		1701291	Coil, 12 volt	1
	C200	12-19		4740154	Seal ring	4
	C300	12-19		5000164 (9007315-0507)	Screw	4
	QC100	12-19		11112898	Control Kit, electric on/off, 12v, low, NC (SB-2012-011)	1
	QC120	12-19		11103621	Solenoid valve seal kit	1
	QC125	12-19		11104457	Nut	1
	QC150	12-19		11104463	Solenoid valve kit, 12 volt	1

Control

(CK)

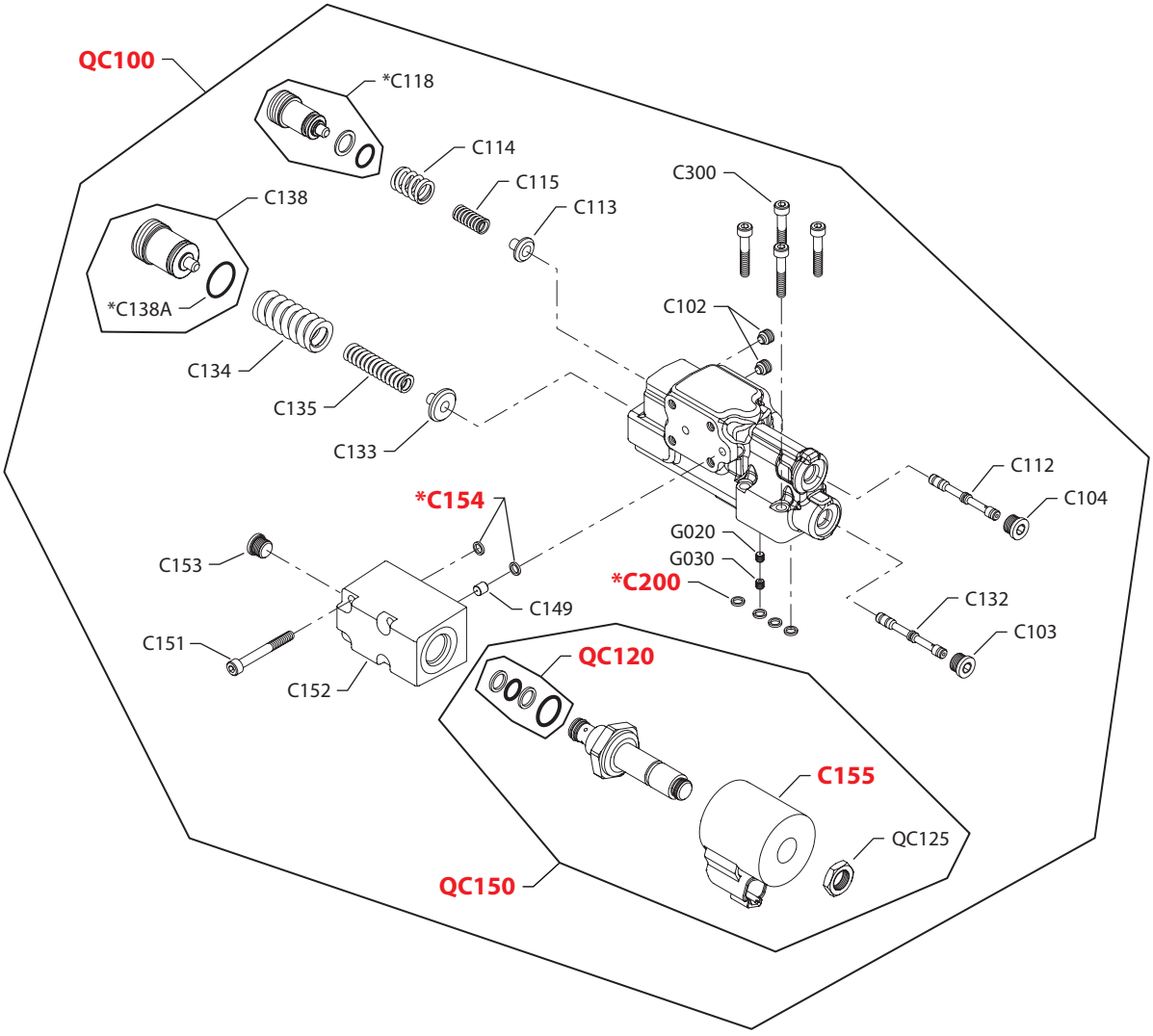

E101 833E

* = included in base motor seal kit Q210

Enlarged **bold** type item numbers are recommended part to stock for servicing.

Control

Electric proportional control

Order code	Item	Date begin	Date end	Part number	Part name	Qty. per model/kit
CK	C102	11-42		4740064	Set screw	2
	C103	11-42		327007 (9005110-4400)	Plug assembly	1
	C104	11-42		327007 (9005110-4400)	Plug assembly	1
	C112	11-42		1701439	Spool	1
	C113	11-42		4740301	Spring guide	1
	C114	11-42		4740061	Spring	1
	C115	11-42		4740062	Spring	1
	C118	11-42		11062214	Adjusting plug assembly (SB-2010-026)	1
	C132	11-42		1701124	Spool	1
	C133	11-42		4740247	Spring guide	1
	C134	11-42		4740051	Spring, PC outer	1
	C135	11-42		4740052	Spring, PC inner	1
	C138	11-42		11062379	Adjusting plug assembly	1
	C138A	11-42		5000656	O-ring	1
	C149	11-42		739144	Orifice plug, 0.8mm	1
	C151	11-42		9007315-0510	Screw	4
	C152	11-42		11150082	Solenoid valve adapter (SB-2016-007)	1
	C153	11-42		327007 (9005110-4400)	Plug assembly	1
	C154	11-42		4740154	Seal ring	2
	C155	11-42		1701563	Coil, 24 volt	1
	C200	11-42		4740154	Seal ring	4
	C300	11-42		5000164 (9007315-0507)	Screw	4
	G020	12-40		739144	Orifice, 0.8mm (SB-2012-011)	1
	G020	12-40		519659	Orifice, 1.0mm (SB-2012-011)	1
	G030	12-40		518215	Orifice plug (SB-2012-011)	1
	QC100	11-42		11112305	Control Kit, electric prop., 24 volt, NO (SB-2012-011)	1
	QC120	11-42		11103621	Solenoid valve seal kit	1
	QC125	11-42		11104459	Nut	1
	QC150	11-42		11104466	Solenoid valve kit, 24 volt	1

Control

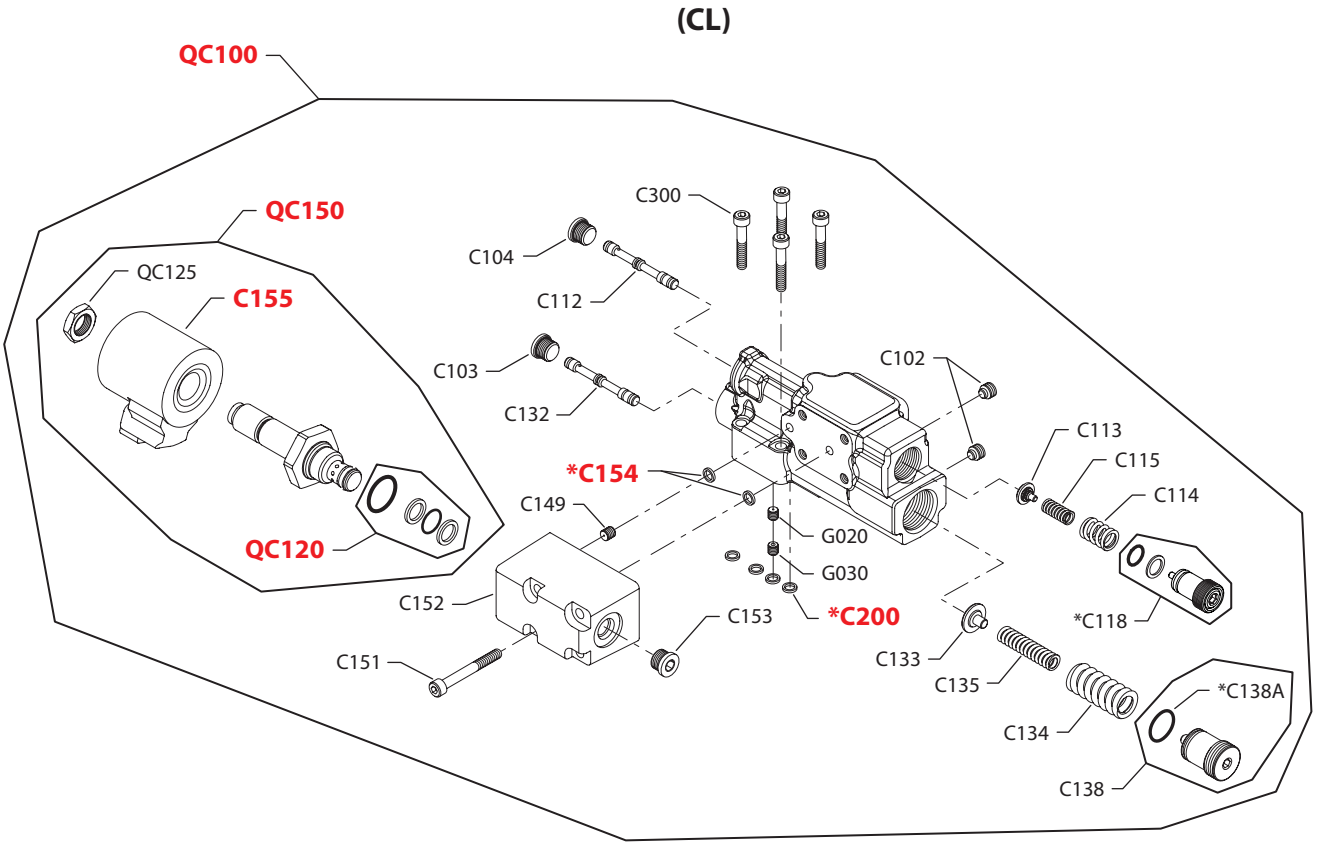

E101 621E

* = included in base motor seal kit Q210

Enlarged **bold** type item numbers are recommended part to stock for servicing.

Control

Electric proportional control

Order code	Item	Date begin	Date end	Part number	Part name	Qty. per model/kit
CL	C102	11-42		4740064	Set screw	2
	C103	11-42		327007 (9005110-4400)	Plug assembly	1
	C104	11-42		327007 (9005110-4400)	Plug assembly	1
	C112	11-42		1701439	Spool	1
	C113	11-42		4740301	Spring guide	1
	C114	11-42		4740061	Spring	1
	C115	11-42		4740062	Spring	1
	C118	11-42		11062214	Adjusting plug assembly (SB-2010-026)	1
	C132	11-42		1701124	Spool	1
	C133	11-42		4740247	Spring guide	1
	C134	11-42		4740051	Spring, PC outer	1
	C135	11-42		4740052	Spring, PC inner	1
	C138	11-42		11062379	Adjusting plug assembly (SB-2010-026)	1
	C138A	11-42		5000656	O-ring	1
	C149	11-42		739144	Orifice plug, 0.8mm	1
	C151	11-42		9007315-0510	Screw	4
	C152	11-42		11150082	Solenoid valve adapter (SB-2016-007)	1
	C153	11-42		327007 (9005110-4400)	Plug assembly	1
	C154	11-42		4740154	Seal ring	2
	C155	11-42		1701563	Coil, 24 volt	1
	C200	11-42		4740154	Seal ring	4
	C300	11-42		5000164 (9007315-0507)	Screw	4
	G020	12-40		739144	Orifice, 0.8mm (SB-2012-011)	1
	G020	12-40		519659	Orifice, 1.0mm (SB-2012-011)	1
	G030	12-40		518215	Orifice plug (SB-2012-011)	1
	QC100	11-42		11112231	Control Kit, electric prop., 24v, NO (SB-2012-011)	1
	QC120	11-42		11103621	Solenoid valve seal kit	1
	QC125	11-42		11104459	Nut	1
	QC150	11-42		11104466	Solenoid valve kit, 24 volt	1

Control

(CN & CR)

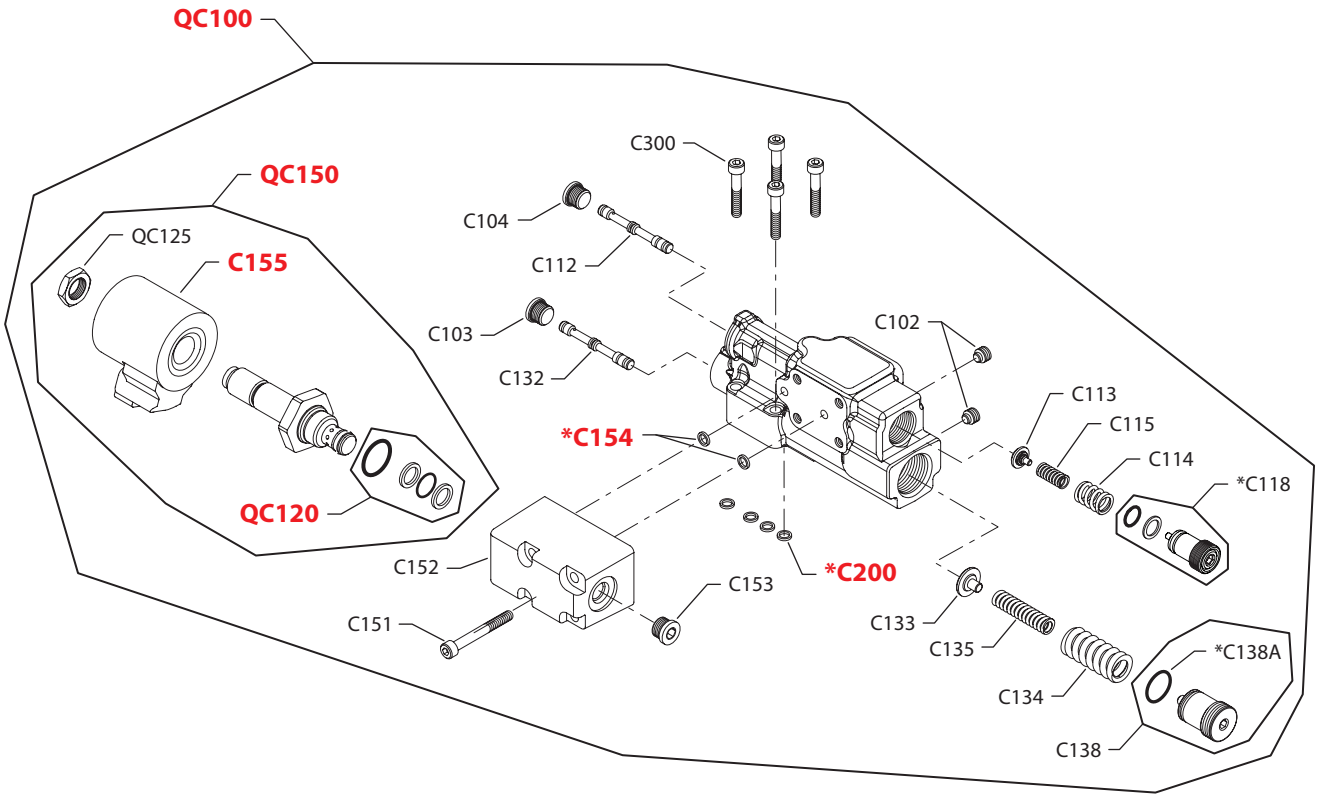

E101 622E

* = included in base motor seal kit Q210

Enlarged **bold** type item numbers are recommended part to stock for servicing.

Control

Electric on/off control

Order code	Item	Date begin	Date end	Part number	Part name	Qty. per model/kit
CN	C102	11-51		4740064	Set screw	2
	C103	11-51		327007 (9005110-4400)	Plug assembly	1
	C104	11-51		327007 (9005110-4400)	Plug assembly	1
	C112	11-51		4740300	Spool	1
	C113	11-51		4740301	Spring guide	1
	C114	11-51		4740061	Spring	1
	C115	11-51		4740062	Spring	1
	C118	11-51		11062214	Adjusting plug assembly (SB-2010-026)	1
	C132	11-51		1701124	Spool	1
	C133	11-51		4740247	Spring guide	1
	C134	11-51		4740051	Spring, PC outer	1
	C135	11-51		4740052	Spring, PC inner	1
	C138	11-51		11062379	Adjusting plug assembly (SB-2010-026)	1
	C138A	11-51		5000656	O-ring	1
	C151	11-51		9007315-0510	Screw	4
	C152	11-51		11150082	Solenoid valve adapter (SB-2016-007)	1
	C153	11-51		327007 (9005110-4400)	Plug assembly	1
	C154	11-51		4740154	Seal ring	2
	C155	11-51		1701563	Coil, 24 volt	1
	C200	11-51		4740154	Seal ring	4
	C300	11-51		5000164 (9007315-0507)	Screw	4
	QC100	11-51		11112226	Control Kit, electric on/off 24v, NO (SB-2012-011)	1
	QC120	11-51		11103621	Solenoid valve seal kit	1
	QC125	11-51		11104457	Nut	1
	QC150	11-51		11104462	Solenoid valve kit, 24 volt	1
CR	C102	09-05		4740064	Set screw	2
	C103	09-05		327007 (9005110-4400)	Plug assembly	1
	C104	09-05		327007 (9005110-4400)	Plug assembly	1
	C112	09-05		4740300	Spool	1
	C113	09-05		4740301	Spring guide	1
	C114	09-05		4740061	Spring	1
	C115	09-05		4740062	Spring	1
	C118	09-05		11062214	Adjusting plug assembly (SB-2010-026)	1
	C132	09-05		1701124	Spool	1
	C133	09-05		4740247	Spring guide	1
	C134	09-05		4740051	Spring, PC outer	1
	C135	09-05		4740052	Spring, PC inner	1
	C138	09-05		11062379	Adjusting plug assembly (SB-2010-026)	1
	C138A	09-05		5000656	O-ring	1
	C151	09-05		9007315-0510	Screw	4
	C152	09-05		11150082	Solenoid valve adapter (SB-2016-007)	1
	C153	09-05		327007 (9005110-4400)	Plug assembly	1
	C154	09-05		4740154	Seal ring	2
	C155	09-05		1701563	Coil, 24 volt	1
	C200	09-05		4740154	Seal ring	4
	C300	09-05		5000164 (9007315-0507)	Screw	4
	QC100	09-05		11112217	Control Kit, electric on/off 24v, NC (SB-2012-011)	1
	QC120	09-05		11103621	Solenoid valve seal kit	1
	QC125	09-05		11104457	Nut	1
	QC150	09-05		11104464	Solenoid valve kit, 24 volt	1

Control

(CT)

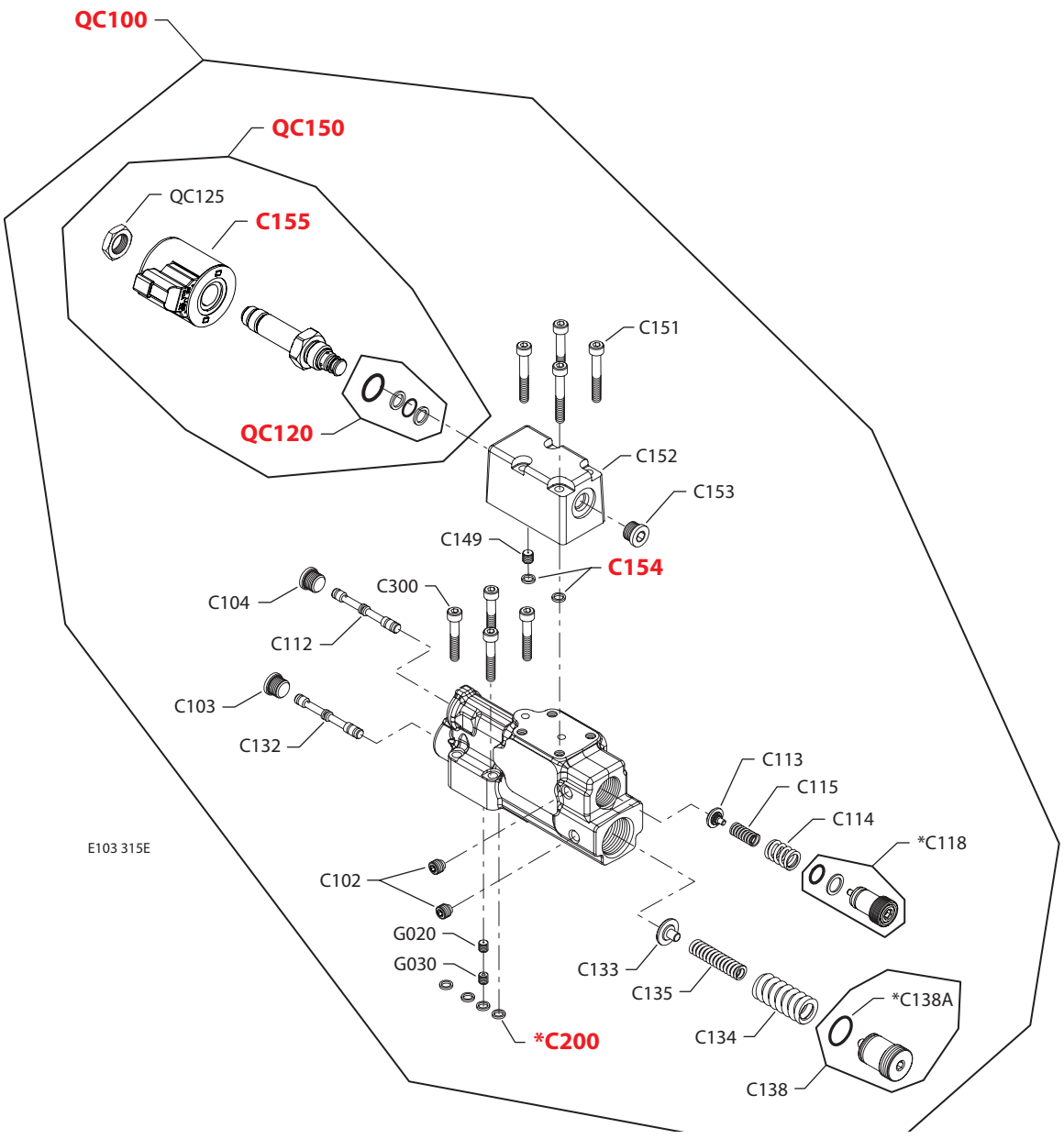
QC100
QC150
QC125
C155
QC120
C151
C152
C153
C149
C154
C104
C300
C112
C103
C132
C113
C115
C114
*C118
E103 315E
C102
G020
G030
*C200
C133
C135
C134
*C138A
C138

Control

Electric proportional control

Order code	Item	Date begin	Date end	Part number	Part name	Qty. per model/kit
CT	C102	13-06		4740064	Set screw	2
	C103	13-06		327007 (9005110-4400)	Plug assembly	1
	C104	13-06		327007 (9005110-4400)	Plug assembly	1
	C112	13-06		1701439	Spool, LS	1
	C113	13-06		4740301	Spring guide	1
	C114	13-06		4740061	Spring	1
	C115	13-06		4740062	Spring	1
	C118	13-06		11062214	Adjusting plug assembly (SB-2010-026)	1
	C132	13-06		1701124	Spool, PC	1
	C133	13-06		4740247	Spring guide	1
	C134	13-06		4740051	Spring, PC outer	1
	C135	13-06		4740052	Spring, PC inner	1
	C138	13-06		11062379	Adjusting plug assembly (SB-2010-026)	1
	C138A	13-06		5000656	O-ring	1
	C149	13-06		739144	Orifice plug, 0.8mm	1
	C151	13-06		9007315-0510	Screw	4
	C152	13-06		11150082	Solenoid valve adapter (SB-2016-007)	1
	C153	13-06		327007 (9005110-4400)	Plug assembly	1
	C154	13-06		4740154	Seal ring	2
	C155	13-06		1701291	Coil, 12 volt	1
	C200	13-06		4740154	Seal ring	4
	C300	13-06		5000164 (9007315-0507)	Screw	4
	QC100	13-06		11120180	Control Kit, electric proportional 12v, NC	1
	QC120	13-06		11103621	Solenoid valve seal kit	1
	QC125	13-06		11104460	Nut	1
	QC150	13-06		11104467	Solenoid valve kit, 12 volt	1

Control

(DF)

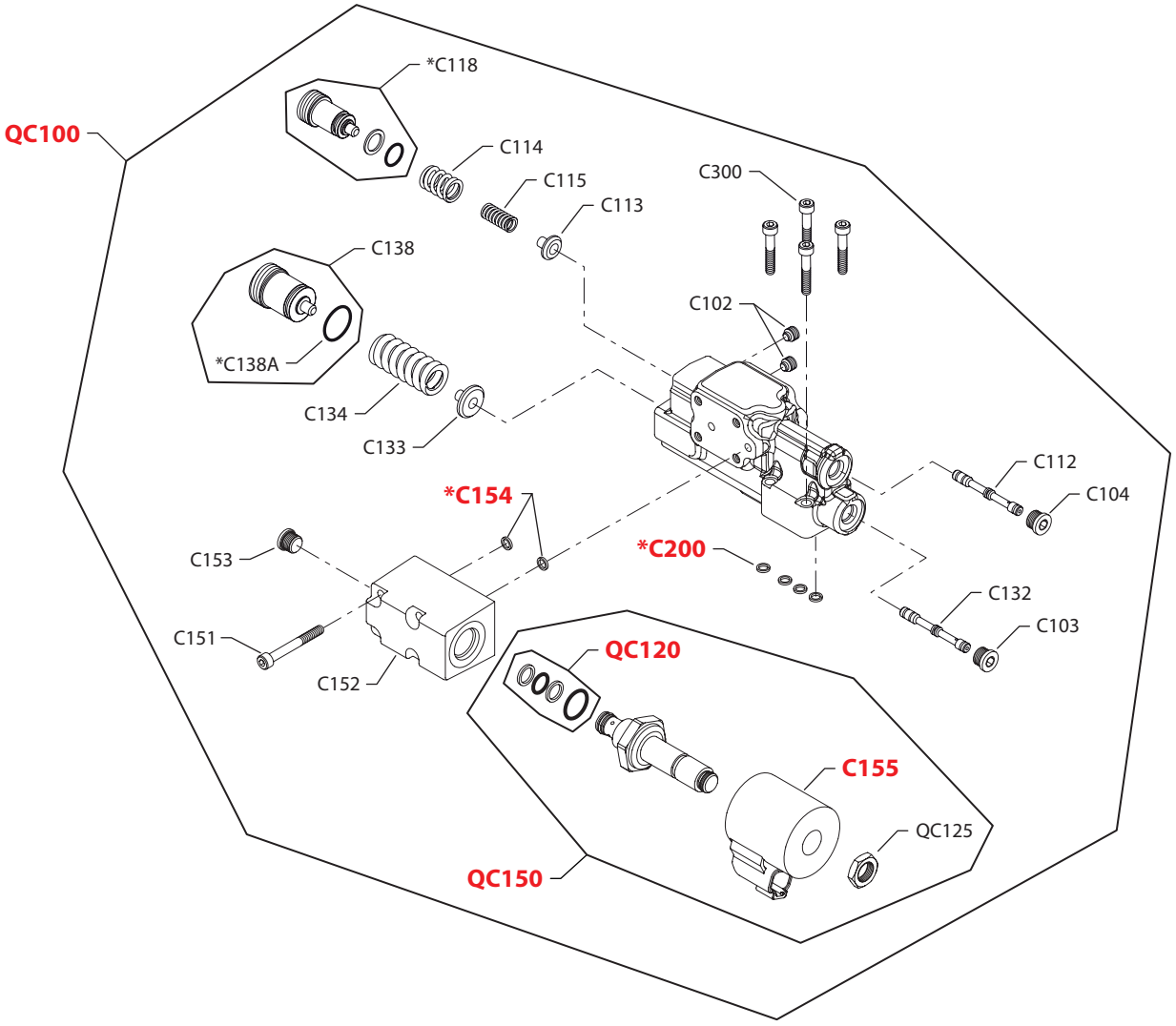

E101 624E

* = included in base motor seal kit Q210

Enlarged **bold** type item numbers are recommended part to stock for servicing.

Control

Electric on/off control

Order code	Item	Date begin	Date end	Part number	Part name	Qty. per model/kit
DF	C102	08-08		4740064	Set screw	2
	C103	08-08		327007 (9005110-4400)	Plug assembly	1
	C104	08-08		327007 (9005110-4400)	Plug assembly	1
	C112	08-08		4740300	Spool	1
	C113	08-08		4740301	Spring guide	1
	C114	08-08		4740061	Spring	1
	C115	08-08		4740062	Spring	1
	C118	08-08		11062214	Adjusting plug assembly (SB-2010-026)	1
	C132	08-08		1701124	Spool	1
	C133	08-08		4740247	Spring guide	1
	C134	08-08		4740324	Spring, heavy	1
	C138	08-08		1700597	Adjusting plug assembly	1
	C138A	08-08		5000656	O-ring	1
	C151	08-08		9007315-0510	Screw	4
	C152	08-08		11150082	Solenoid valve adapter (SB-2016-007)	1
	C153	08-08		327007 (9005110-4400)	Plug assembly	1
	C154	08-08		4740154	Seal ring	2
	C155	08-08		1701563	Coil, 24 volt	1
	C200	08-08		4740154	Seal ring	4
	C300	08-08		5000164 (9007315-0507)	Screw	4
	QC100	08-08		11112304	Control Kit, electric on/off, 24v, high, NO (SB-2012-011)	1
	QC120	08-08		11103621	Solenoid valve seal kit	1
	QC125	08-08		11104457	Nut	1
	QC150	08-08		11104462	Solenoid valve kit, 24 volt	1

Control

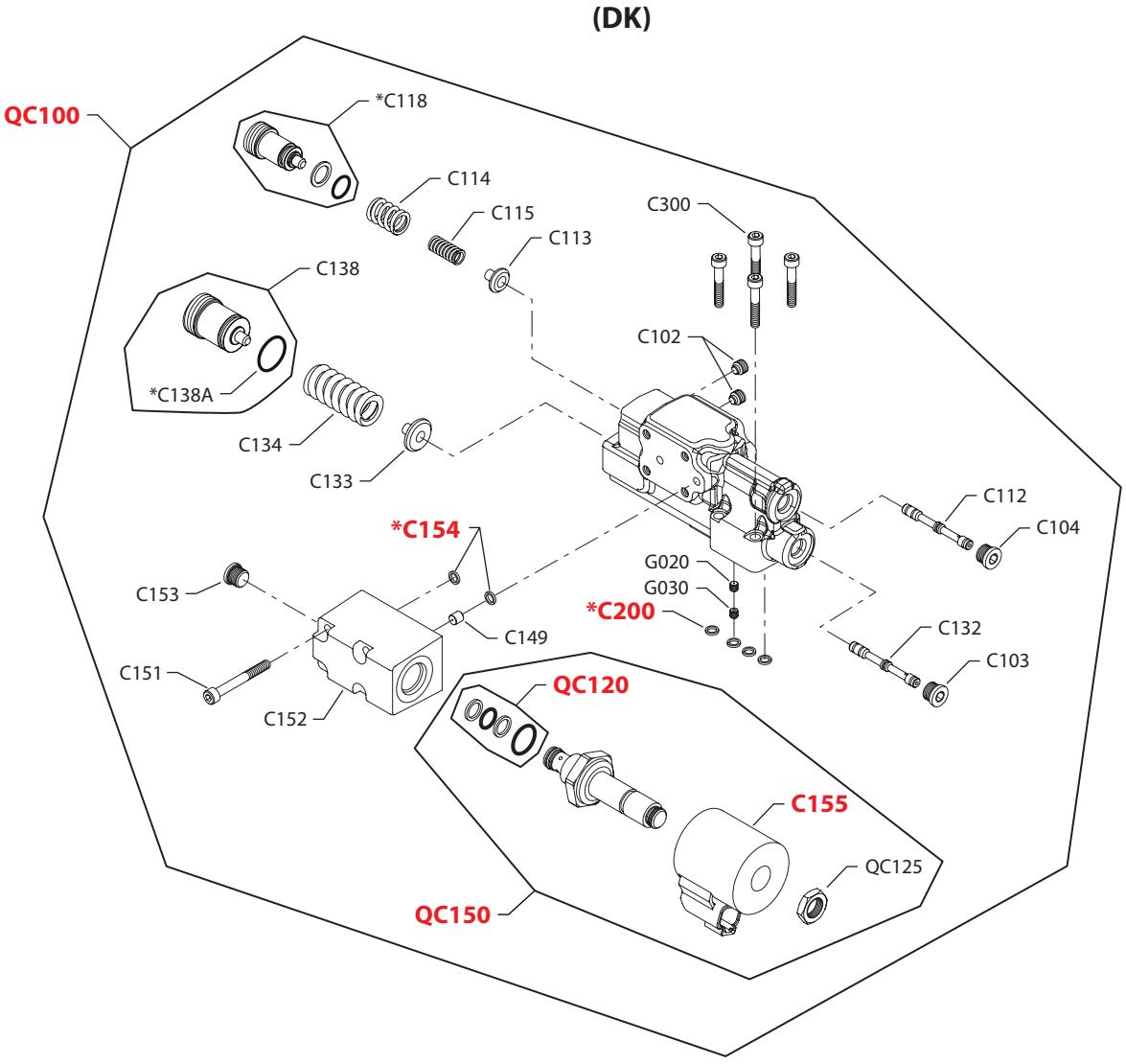

E101 834E

* = included in base motor seal kit Q210

Enlarged **bold** type item numbers are recommended part to stock for servicing.

Control

Electric proportional control

Order code	Item	Date begin	Date end	Part number	Part name	Qty. per model/kit
DK	C102	11-51		4740064	Set screw	2
	C103	11-51		327007 (9005110-4400)	Plug assembly	1
	C104	11-51		327007 (9005110-4400)	Plug assembly	1
	C112	11-51		1701439	Spool	1
	C113	11-51		4740301	Spring guide	1
	C114	11-51		4740061	Spring	1
	C115	11-51		4740062	Spring	1
	C118	11-51		11062214	Adjusting plug assembly	1
	C132	11-51		1701124	Spool	1
	C133	11-51		4740247	Spring guide	1
	C134	11-51		4740324	Spring, heavy	1
	C138	11-51		1700597	Adjusting plug assembly	1
	C138A	11-51		5000656	O-ring	1
	C149	11-51		739144	Orifice plug, 0.8mm	1
	C151	11-51		9007315-0510	Screw	4
	C152	11-51		11150082	Solenoid valve adapter (SB-2016-007)	1
	C153	11-51		327007 (9005110-4400)	Plug assembly	1
	C154	11-51		4740154	Seal ring	2
	C155	11-51		1701563	Coil, 24 volt	1
	C200	11-51		4740154	Seal ring	4
	C300	11-51		5000164 (9007315-0507)	Screw	4
	G020	12-40		739144	Orifice, 0.8mm (SB-2012-011)	1
	G020	12-40		519659	Orifice, 1.0mm (SB-2012-011)	1
	G030	12-40		518215	Orifice plug (SB-2012-011)	1
	QC100	11-51		11112290	Control Kit, electric prop., 24v, high, NO (SB-2012-011)	1
	QC120	11-51		11103621	Solenoid valve seal kit	1
	QC125	11-51		11104459	Nut	1
	QC150	11-51		11104466	Solenoid valve kit, 24 volt	1

Control

(DL)

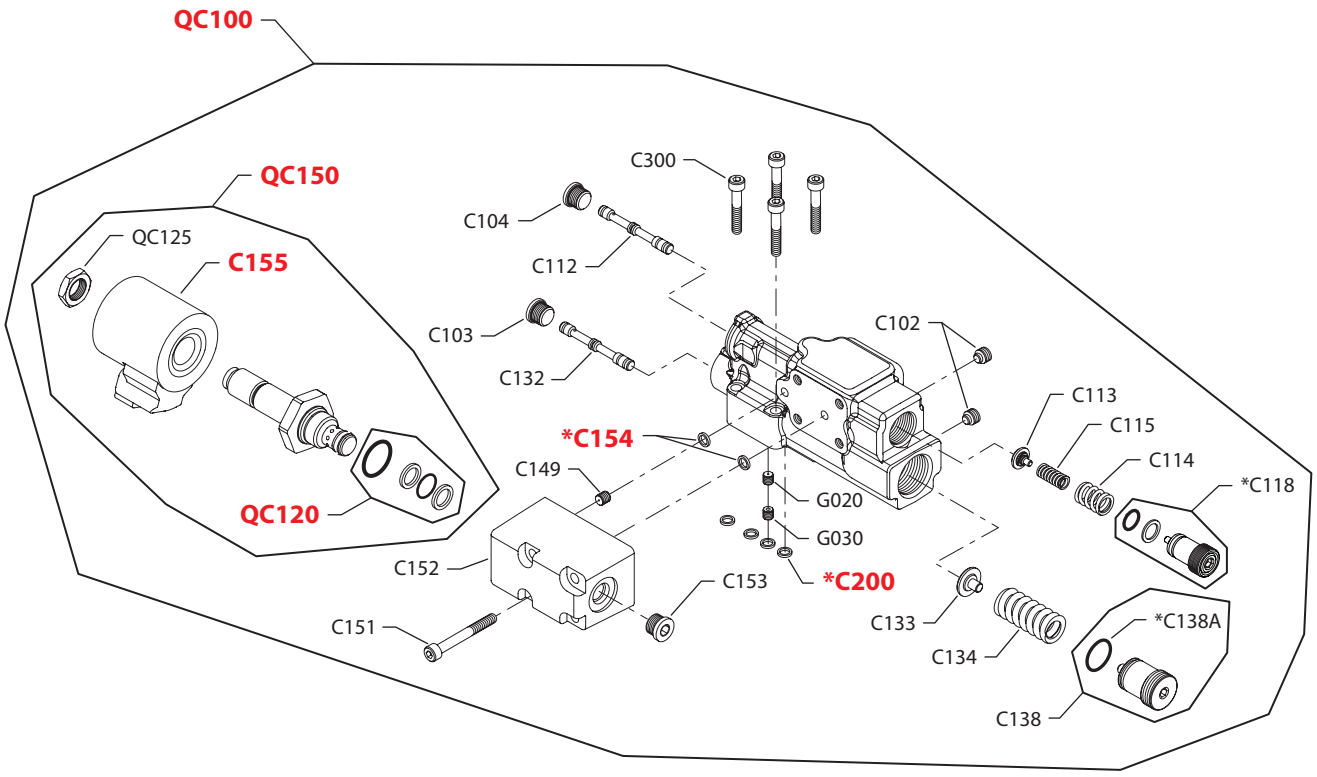

E101 831E

* = included in base motor seal kit Q210

Enlarged **bold** type item numbers are recommended part to stock for servicing.

Control

Electric proportional control

Order code	Item	Date begin	Date end	Part number	Part name	Qty. per model/kit
DL	C102	11-51		4740064	Set screw	2
	C103	11-51		327007 (9005110-4400)	Plug assembly	1
	C104	11-51		327007 (9005110-4400)	Plug assembly	1
	C112	11-51		1701439	Spool	1
	C113	11-51		4740301	Spring guide	1
	C114	11-51		4740061	Spring	1
	C115	11-51		4740062	Spring	1
	C118	11-51		11062214	Adjusting plug assembly (SB-2010-026)	1
	C132	11-51		1701124	Spool	1
	C133	11-51		4740247	Spring guide	1
	C134	11-51		4740324	Spring, PC heavy	1
	C138	11-51		1700597	Adjusting plug assembly	1
	C138A	11-51		5000656	O-ring	1
	C149	11-51		739144	Orifice plug, 0.8mm	1
	C151	11-51		9007315-0510	Screw	4
	C152	11-51		11150082	Solenoid valve adapter (SB-2016-007)	1
	C153	11-51		327007 (9005110-4400)	Plug assembly	1
	C154	11-51		4740154	Seal ring	2
	C155	11-51		1701563	Coil, 24 volt	1
	C200	11-51		4740154	Seal ring	4
	C300	11-51		5000164 (9007315-0507)	Screw	4
	G020	12-40		739144	Orifice, 0.8mm (SB-2012-011)	1
	G020	12-40		519659	Orifice, 1.0mm (SB-2012-011)	1
	G030	12-40		518215	Orifice plug (SB-2012-011)	1
	QC100	11-51		11112225	Control Kit, electric prop., 24v, high, NO (SB-2012-011)	1
	QC120	11-51		11103621	Solenoid valve seal kit	1
	QC125	11-51		11104459	Nut	1
	QC150	11-51		11104466	Solenoid valve kit, 24 volt	1

Control

(DN & DR)

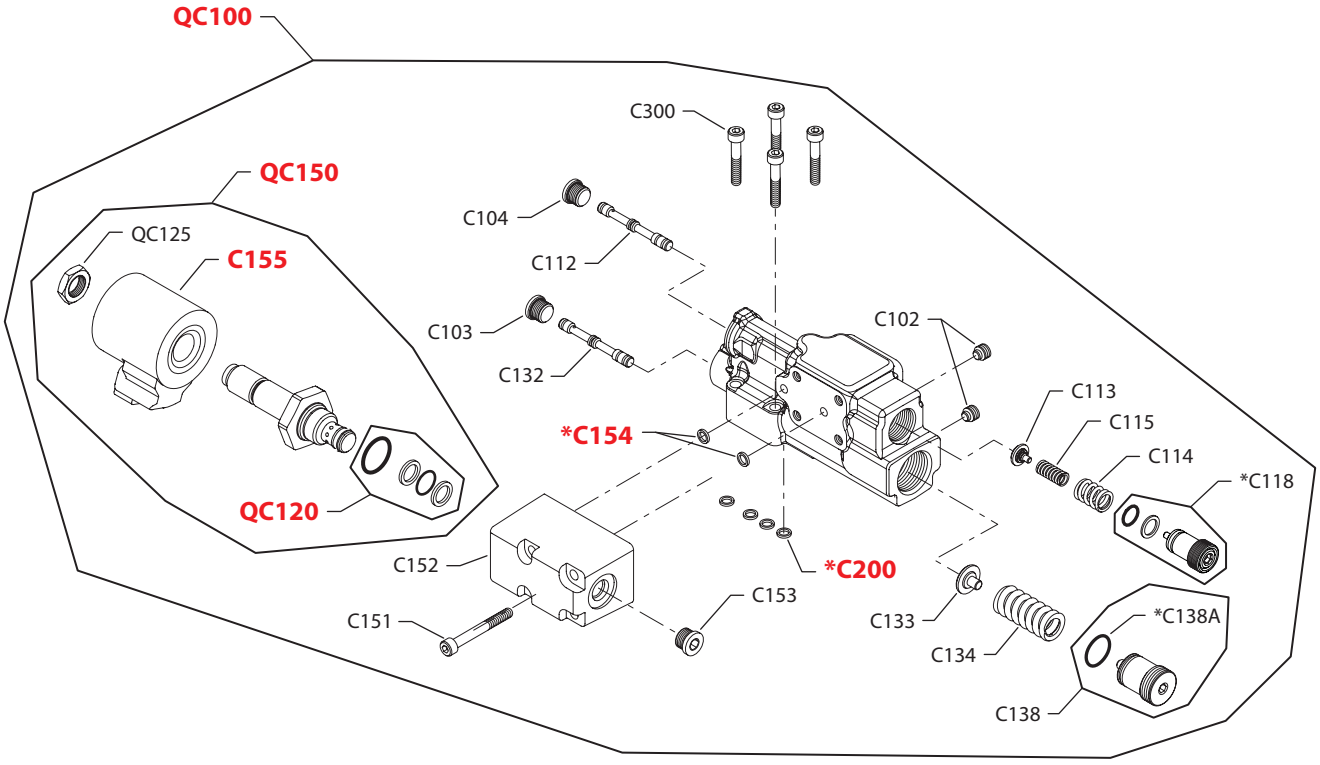

E101 831E

* = included in base motor seal kit Q210

Enlarged **bold** type item numbers are recommended part to stock for servicing.

Control

Electric on/off control

Order code	Item	Date begin	Date end	Part number	Part name	Qty. per model/kit
DN	C102	08-08		4740064	Set screw	2
	C103	08-08		327007 (9005110-4400)	Plug assembly	1
	C104	08-08		327007 (9005110-4400)	Plug assembly	1
	C112	08-08		4740300	Spool	1
	C113	08-08		4740301	Spring guide	1
	C114	08-08		4740061	Spring	1
	C115	08-08		4740062	Spring	1
	C118	08-08		11062214	Adjusting plug assembly (SB-2010-026)	1
	C132	08-08		1701124	Spool	1
	C133	08-08		4740247	Spring guide	1
	C134	08-08		4740324	Spring, PC heavy	1
	C138	08-08		1700597	Adjusting plug assembly	1
	C138A	08-08		5000656	O-ring	1
	C151	08-08		9007315-0510	Screw	4
	C152	08-08		11150082	Solenoid valve adapter (SB-2016-007)	1
	C153	08-08		327007 (9005110-4400)	Plug assembly	1
	C154	08-08		4740154	Seal ring	2
	C155	08-08		1701563	Coil, 24 volt	1
	C200	08-08		4740154	Seal ring	4
	C300	08-08		5000164 (9007315-0507)	Screw	4
	QC100	08-08		11112227	Control Kit, electric on/off, 24v, high, NO (SB-2012-011)	1
	QC120	08-08		11103621	Solenoid valve seal kit	1
	QC125	08-08		11104457	Nut	1
	QC150	08-08		11104462	Solenoid valve kit, 24 volt	1
DR	C102	08-08		4740064	Set screw	2
	C103	08-08		327007 (9005110-4400)	Plug assembly	1
	C104	08-08		327007 (9005110-4400)	Plug assembly	1
	C112	08-08		4740300	Spool	1
	C113	08-08		4740301	Spring guide	1
	C114	08-08		4740061	Spring	1
	C115	08-08		4740062	Spring	1
	C118	08-08		11062214	Adjusting plug assembly (SB-2010-026)	1
	C132	08-08		1701124	Spool	1
	C133	08-08		4740247	Spring guide	1
	C134	08-08		4740324	Spring, PC heavy	1
	C138	08-08		1700597	Adjusting plug assembly	1
	C138A	08-08		5000656	O-ring	1
	C151	08-08		9007315-0510	Screw	4
	C152	08-08		11150082	Solenoid valve adapter (SB-2016-007)	1
	C153	08-08		327007 (9005110-4400)	Plug assembly	1
	C154	08-08		4740154	Seal ring	2
	C155	08-08		1701563	Coil, 24 volt	1
	C200	08-08		4740154	Seal ring	4
	C300	08-08		5000164 (9007315-0507)	Screw	4
	QC100	08-08		11112228	Control Kit, electric on/off, 24v, high, NC (SB-2012-011)	1
	QC120	08-08		11103621	Solenoid valve seal kit	1
	QC125	08-08		11104457	Nut	1
	QC150	08-08		11104464	Solenoid valve kit, 24 volt	1

Control

(FA)

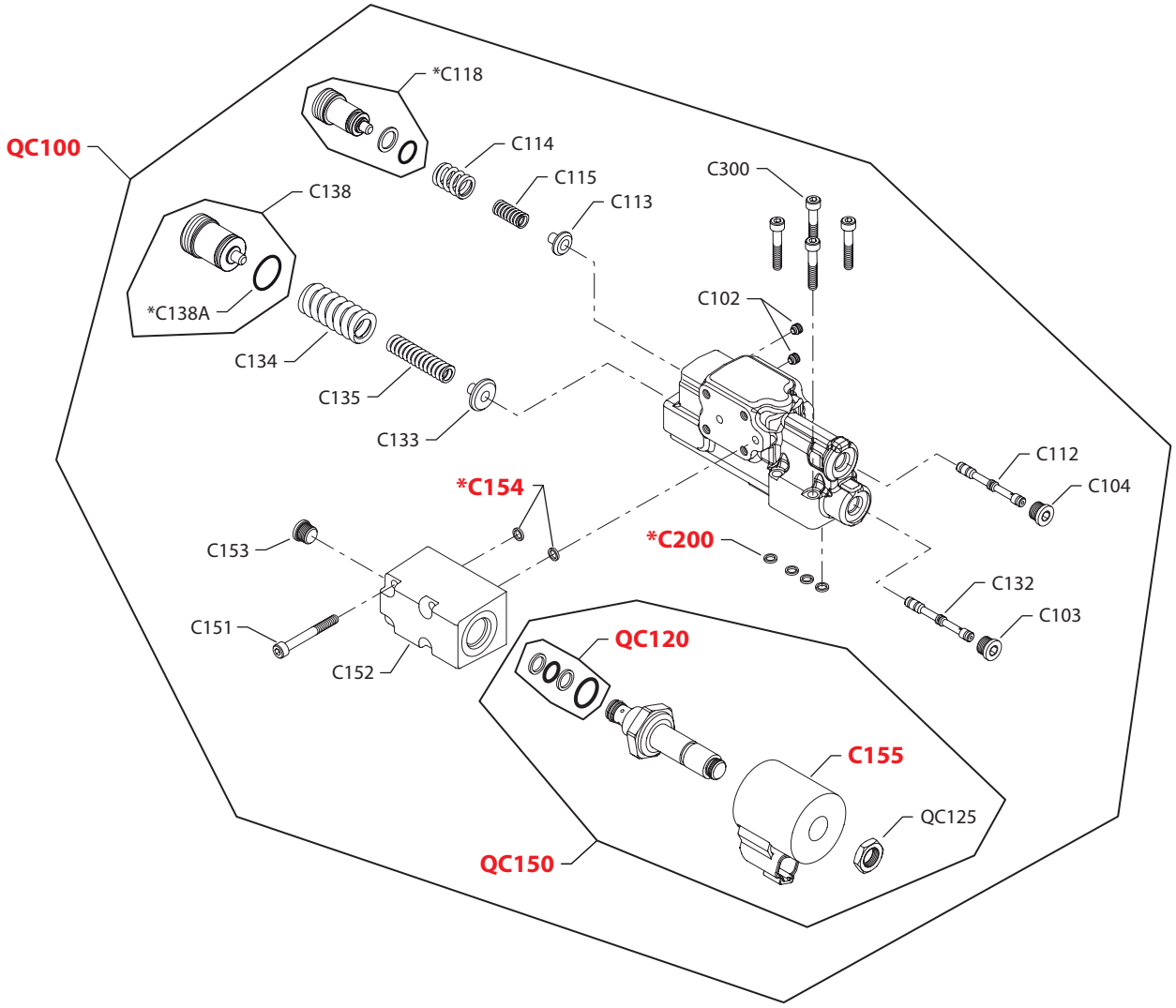

E101 700E

* = included in base motor seal kit Q210

Enlarged **bold** type item numbers are recommended part to stock for servicing.

Control

Electric dump control

Order code	Item	Date begin	Date end	Part number	Part name	Qty. per model/kit
FA	C102	11-35		4740064	Set screw	2
	C103	11-35		327007 (9005110-4400)	Plug assembly	1
	C104	11-35		327007 (9005110-4400)	Plug assembly	1
	C112	11-35		1701124	Spool	1
	C113	11-35		4740246	Spring guide	1
	C114	11-35		4740061	Spring	1
	C115	11-35		4740062	Spring	1
	C118	11-35		11062214	Adjusting plug assembly	1
	C132	11-35		1701124	Spool	1
	C133	11-35		4740247	Spring guide	1
	C134	11-35		4740051	Spring, PC outer	1
	C135	11-35		4740052	Spring, PC inner	1
	C138	11-35		11062379	Adjusting plug assembly	1
	C138A	11-35		5000656	O-ring	1
	C151	11-35		9007315-0510	Screw	4
	C152	11-35		11150082	Solenoid valve adapter (SB-2016-007)	1
	C153	11-35		327007 (9005110-4400)	Plug assembly	1
	C154	11-35		4740154	Seal ring	2
	C155	11-35		1701291	Coil, 12v	1
	C200	11-35		4740154	Seal ring	4
	C300	11-35		5000164 (9007315-0507)	Screw	4
	QC100	11-35		11112297	Control Kit, electric dump, 12v, NC (SB-2012-011)	1
	QC120	11-35		11103621	Solenoid valve seal kit	1
	QC125	11-35		11104457	Nut	1
	QC150	11-35		11104463	Solenoid valve kit, 12 volt	1

Control

(FB & FE)

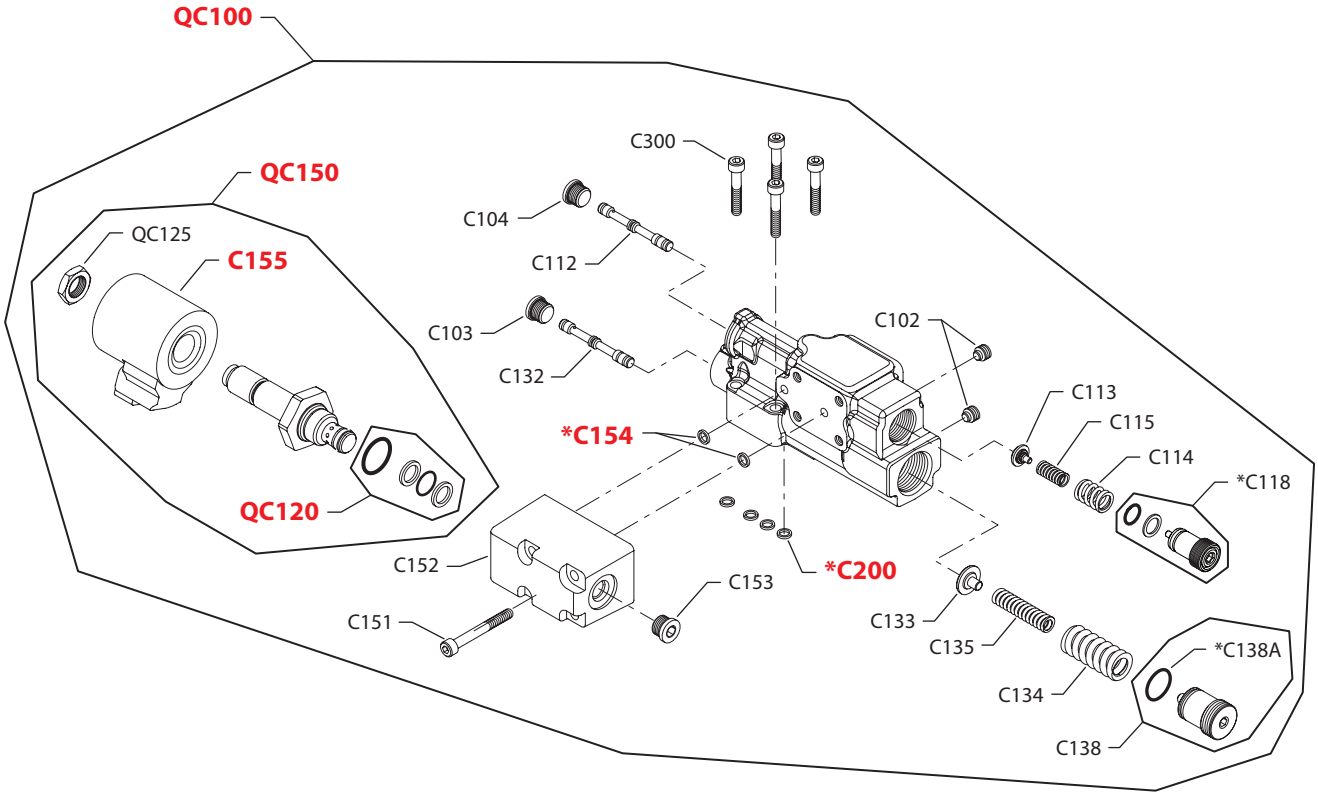

E101 622E

* = included in base motor seal kit Q210

Enlarged **bold** type item numbers are recommended part to stock for servicing.

Control

Electric dump control

Order code	Item	Date begin	Date end	Part number	Part name	Qty. per model/kit
FB	C102	11-35		4740064	Set screw	2
	C103	11-35		327007 (9005110-4400)	Plug assembly	1
	C104	11-35		327007 (9005110-4400)	Plug assembly	1
	C112	11-35		1701124	Spool	1
	C113	11-35		4740246	Spring guide	1
	C114	11-35		4740061	Spring	1
	C115	11-35		4740062	Spring	1
	C118	11-35		11062214	Adjusting plug assembly	1
	C132	11-35		1701124	Spool	1
	C133	11-35		4740247	Spring guide	1
	C134	11-35		4740051	Spring, PC outer	1
	C135	11-35		4740052	Spring, PC inner	1
	C138	11-35		11062379	Adjusting plug assembly	1
	C138A	11-35		5000656	O-ring	1
	C151	11-35		9007315-0510	Screw	4
	C152	11-35		11150082	Solenoid valve adapter (SB-2016-007)	1
	C153	11-35		327007 (9005110-4400)	Plug assembly	1
	C154	11-35		4740154	Seal ring	2
	C155	11-35		1701291	Coil, 12 volt	1
	C200	11-35		4740154	Seal ring	4
	C300	11-35		5000164 (9007315-0507)	Screw	4
	QC100	11-35		11112223	Control Kit, electric dump 12v, NC (SB-2012-011)	1
	QC120	11-35		11103621	Solenoid valve seal kit	1
	QC125	11-35		11104457	Nut	1
	QC150	11-35		11104463	Solenoid valve kit, 12 volt	1
FE	C102	11-35		4740064	Set screw	2
	C103	11-35		327007 (9005110-4400)	Plug assembly	1
	C104	11-35		327007 (9005110-4400)	Plug assembly	1
	C112	11-35		1701124	Spool	1
	C113	11-35		4740246	Spring guide	1
	C114	11-35		4740061	Spring	1
	C115	11-35		4740062	Spring	1
	C118	11-35		11062214	Adjusting plug assembly	1
	C132	11-35		1701124	Spool	1
	C133	11-35		4740247	Spring guide	1
	C134	11-35		4740051	Spring, PC outer	1
	C135	11-35		4740052	Spring, PC inner	1
	C138	11-35		11062379	Adjusting plug assembly	1
	C138A	11-35		5000656	O-ring	1
	C151	11-35		9007315-0510	Screw	4
	C152	11-35		11150082	Solenoid valve adapter (SB-2016-007)	1
	C153	11-35		327007 (9005110-4400)	Plug assembly	1
	C154	11-35		4740154	Seal ring	2
	C155	11-35		1701563	Coil, 24 volt	1
	C200	11-35		4740154	Seal ring	4
	C300	11-35		5000164 (9007315-0507)	Screw	4
	QC100	11-35		11116538	Control Kit, electric dump 24v, NC (SB-2012-011)	1
	QC120	11-35		11103621	Solenoid valve seal kit	1
	QC125	11-35		11104457	Nut	1
	QC150	11-35		11104464	Solenoid valve kit, 24 volt	1

Control

(FF & FG)

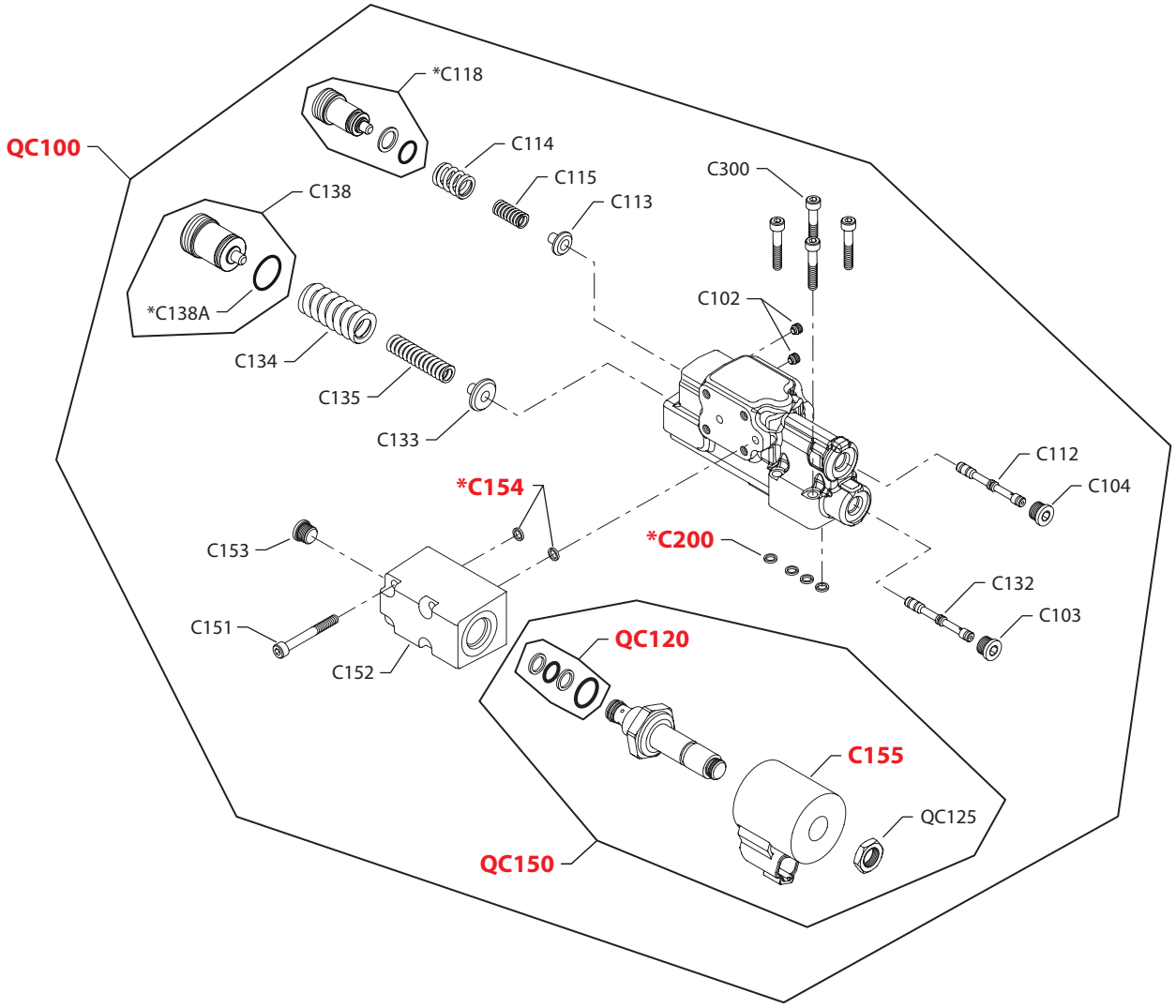

E101 700E

* = included in base motor seal kit Q210

Enlarged **bold** type item numbers are recommended part to stock for servicing.

Control

Electric dump control

Order code	Item	Date begin	Date end	Part number	Part name	Qty. per model/kit
FF	C102	13-08		4740064	Set screw	2
	C103	13-08		327007 (9005110-4400)	Plug assembly	1
	C104	13-08		327007 (9005110-4400)	Plug assembly	1
	C112	13-08		1701124	Spool	1
	C113	13-08		4740246	Spring guide	1
	C114	13-08		4740061	Spring	1
	C115	13-08		4740062	Spring	1
	C118	13-08		11062214	Adjusting plug assembly	1
	C132	13-08		1701124	Spool	1
	C133	13-08		4740247	Spring guide	1
	C134	13-08		4740051	Spring, PC outer	1
	C135	13-08		4740052	Spring, PC inner	1
	C138	13-08		11062379	Adjusting plug assembly	1
	C138A	13-08		5000656	O-ring	1
	C151	13-08		9007315-0510	Screw	4
	C152	13-08		11150082	Solenoid valve adapter (SB-2016-007)	1
	C153	13-08		327007 (9005110-4400)	Plug assembly	1
	C154	13-08		4740154	Seal ring	2
	C155	13-08		1701563	Coil, 24v	1
	C200	13-08		4740154	Seal ring	4
	C300	13-08		5000164 (9007315-0507)	Screw	4
	QC100	13-08		11130227	Control Kit, electric dump, 24v, NC	1
	QC120	13-08		11103621	Solenoid valve seal kit	1
	QC125	13-08		11104457	Nut	1
	QC150	13-08		11104464	Solenoid valve kit, 24 volt	1
FG	C102	13-25		4740064	Set screw	2
	C103	13-25		327007 (9005110-4400)	Plug assembly	1
	C104	13-25		327007 (9005110-4400)	Plug assembly	1
	C112	13-25		1701124	Spool	1
	C113	13-25		4740246	Spring guide	1
	C114	13-25		4740061	Spring	1
	C115	13-25		4740062	Spring	1
	C118	13-25		11062214	Adjusting plug assembly	1
	C132	13-25		1701124	Spool	1
	C133	13-25		4740247	Spring guide	1
	C134	13-25		4740051	Spring, PC outer	1
	C135	13-25		4740052	Spring, PC inner	1
	C138	13-25		11062379	Adjusting plug assembly	1
	C138A	13-25		5000656	O-ring	1
	C151	13-25		9007315-0510	Screw	4
	C152	13-25		11150082	Solenoid valve adapter (SB-2016-007)	1
	C153	13-25		327007 (9005110-4400)	Plug assembly	1
	C154	13-25		4740154	Seal ring	2
	C155	13-25		1701291	Coil, 12v	1
	C200	13-25		4740154	Seal ring	4
	C300	13-25		5000164 (9007315-0507)	Screw	4
	QC100	13-25		11133856	Control Kit, electric dump, 12v, NO	1
	QC120	13-25		11103621	Solenoid valve seal kit	1
	QC125	13-25		11104457	Nut	1
	QC150	13-25		11104461	Solenoid valve kit, 12 volt	1

Control

(FH)

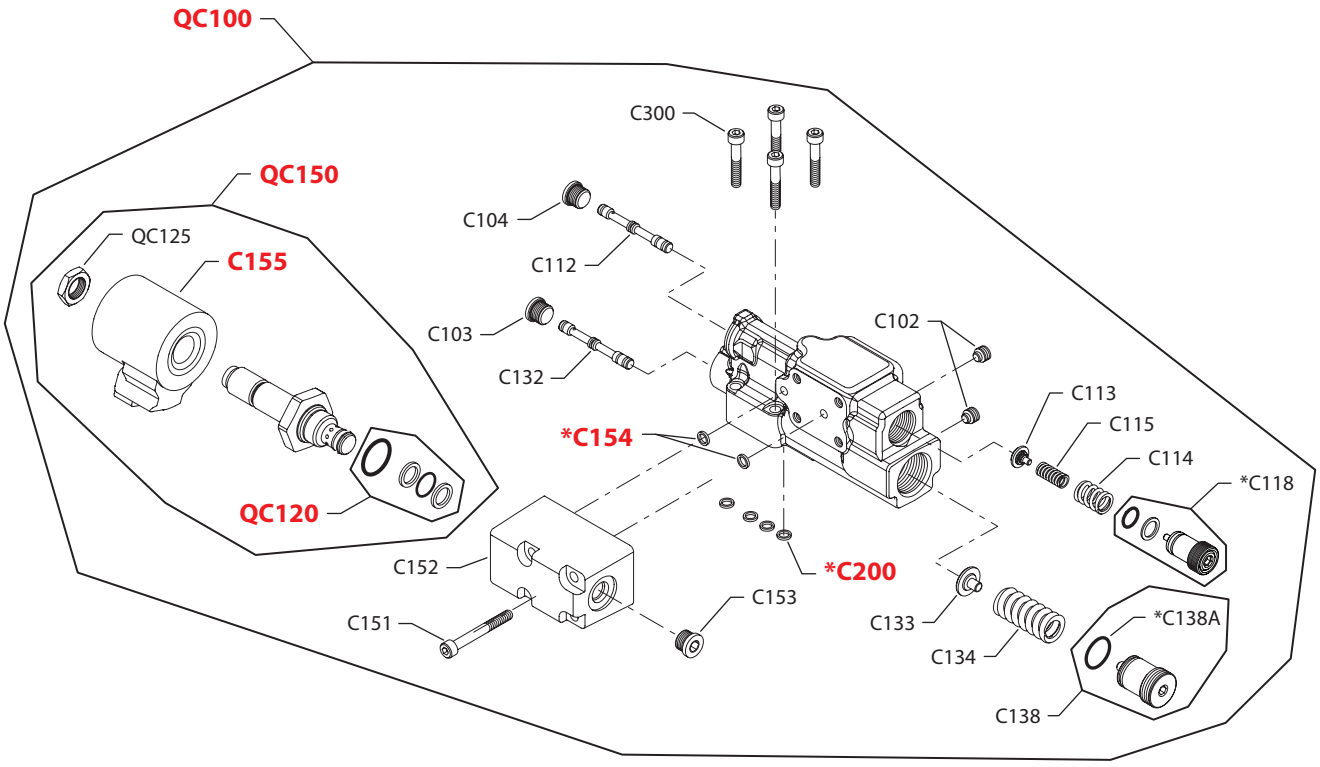

E101 831E

* = included in base motor seal kit Q210

Enlarged **bold** type item numbers are recommended part to stock for servicing.

Control

Electric dump control

Order code	Item	Date begin	Date end	Part number	Part name	Qty. per model/kit
FH	C102	13-36		4740064	Set screw	2
	C103	13-36		327007 (9005110-4400)	Plug assembly	1
	C104	13-36		327007 (9005110-4400)	Plug assembly	1
	C112	13-36		1701124	Spool	1
	C113	13-36		4740246	Spring guide	1
	C114	13-36		4740061	Spring	1
	C115	13-36		4740062	Spring	1
	C118	13-36		11062214	Adjusting plug assembly	1
	C132	13-36		1701124	Spool	1
	C133	13-36		4740247	Spring guide	1
	C134	13-36		4740324	Spring, PC heavy	1
	C138	13-36		1700597	Adjusting plug assembly	1
	C138A	13-36		5000656	O-ring	1
	C151	13-36		9007315-0510	Screw	4
	C152	13-36		11150082	Solenoid valve adapter (SB-2016-007)	1
	C153	13-36		327007 (9005110-4400)	Plug assembly	1
	C154	13-36		4740154	Seal ring	2
	C155	13-36		1701563	Coil, 24 volt	1
	C200	13-36		4740154	Seal ring	4
	C300	13-36		5000164 (9007315-0507)	Screw	4
	QC100	13-36		11135469	Control Kit, electric on/off, 24v, high, NC	1
	QC120	13-36		11103621	Solenoid valve seal kit	1
	QC125	13-36		11104457	Nut	1
	QC150	13-36		11104464	Solenoid valve kit, 24 volt	1

Control

(FJ)

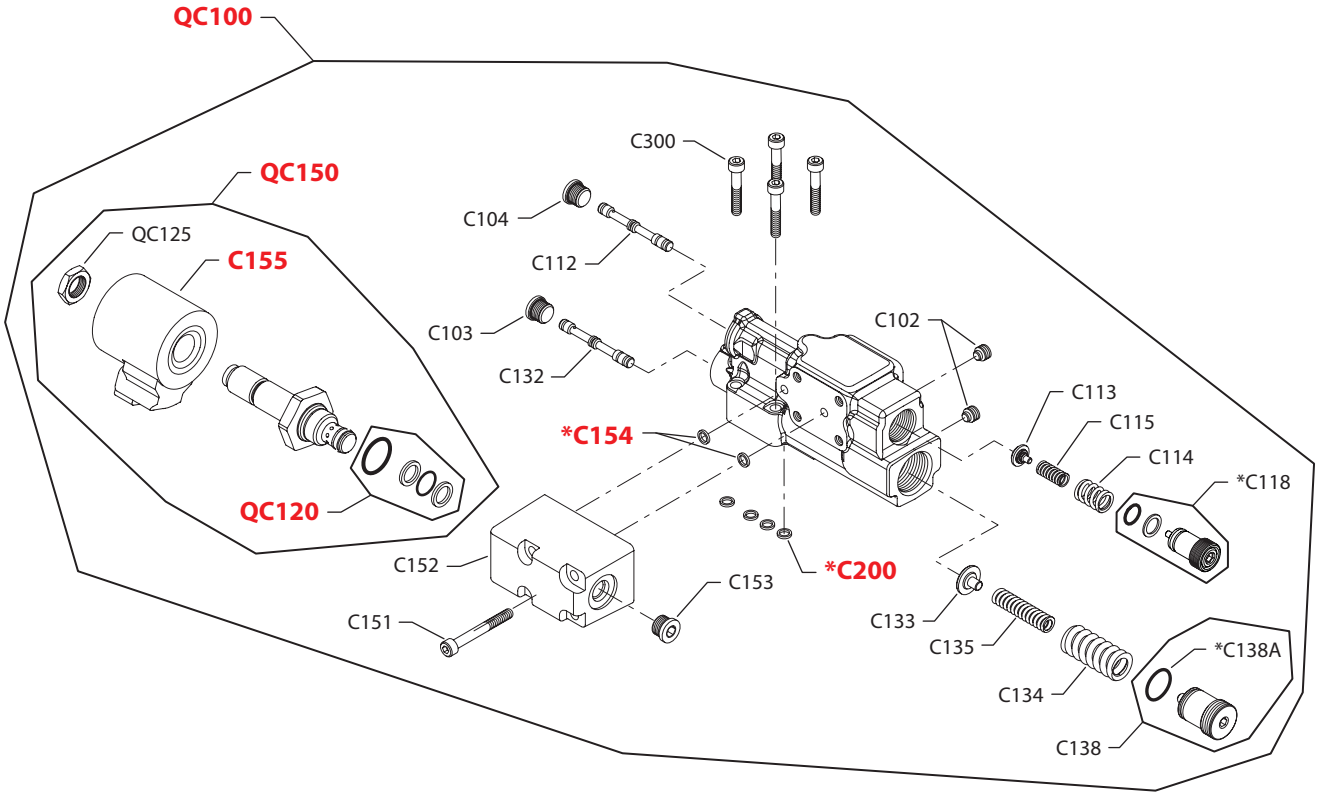

E101 622E

* = included in base motor seal kit Q210

Enlarged **bold** type item numbers are recommended part to stock for servicing.

Control

Electric dump control

Order code	Item	Date begin	Date end	Part number	Part name	Qty. per model/kit
FJ	C102	13-36		4740064	Set screw	2
	C103	13-36		327007 (9005110-4400)	Plug assembly	1
	C104	13-36		327007 (9005110-4400)	Plug assembly	1
	C112	13-36		1701124	Spool	1
	C113	13-36		4740246	Spring guide	1
	C114	13-36		4740061	Spring	1
	C115	13-36		4740062	Spring	1
	C118	13-36		11062214	Adjusting plug assembly	1
	C132	13-36		1701124	Spool	1
	C133	13-36		4740247	Spring guide	1
	C134	13-36		4740051	Spring, PC outer	1
	C135	13-36		4740052	Spring, PC inner	1
	C138	13-36		11062379	Adjusting plug assembly	1
	C138A	13-36		5000656	O-ring	1
	C151	13-36		9007315-0510	Screw	4
	C152	13-36		11150082	Solenoid valve adapter (SB-2016-007)	1
	C153	13-36		327007 (9005110-4400)	Plug assembly	1
	C154	13-36		4740154	Seal ring	2
	C155	13-36		1701291	Coil, 12 volt	1
	C200	13-36		4740154	Seal ring	4
	C300	13-36		5000164 (9007315-0507)	Screw	4
	QC100	13-36		11140029	Control Kit, electric dump 12v, NO	1
	QC120	13-36		11103621	Solenoid valve seal kit	1
	QC125	13-36		11104457	Nut	1
	QC150	13-36		11104461	Solenoid valve kit, 12 volt	1

Control

(FK)

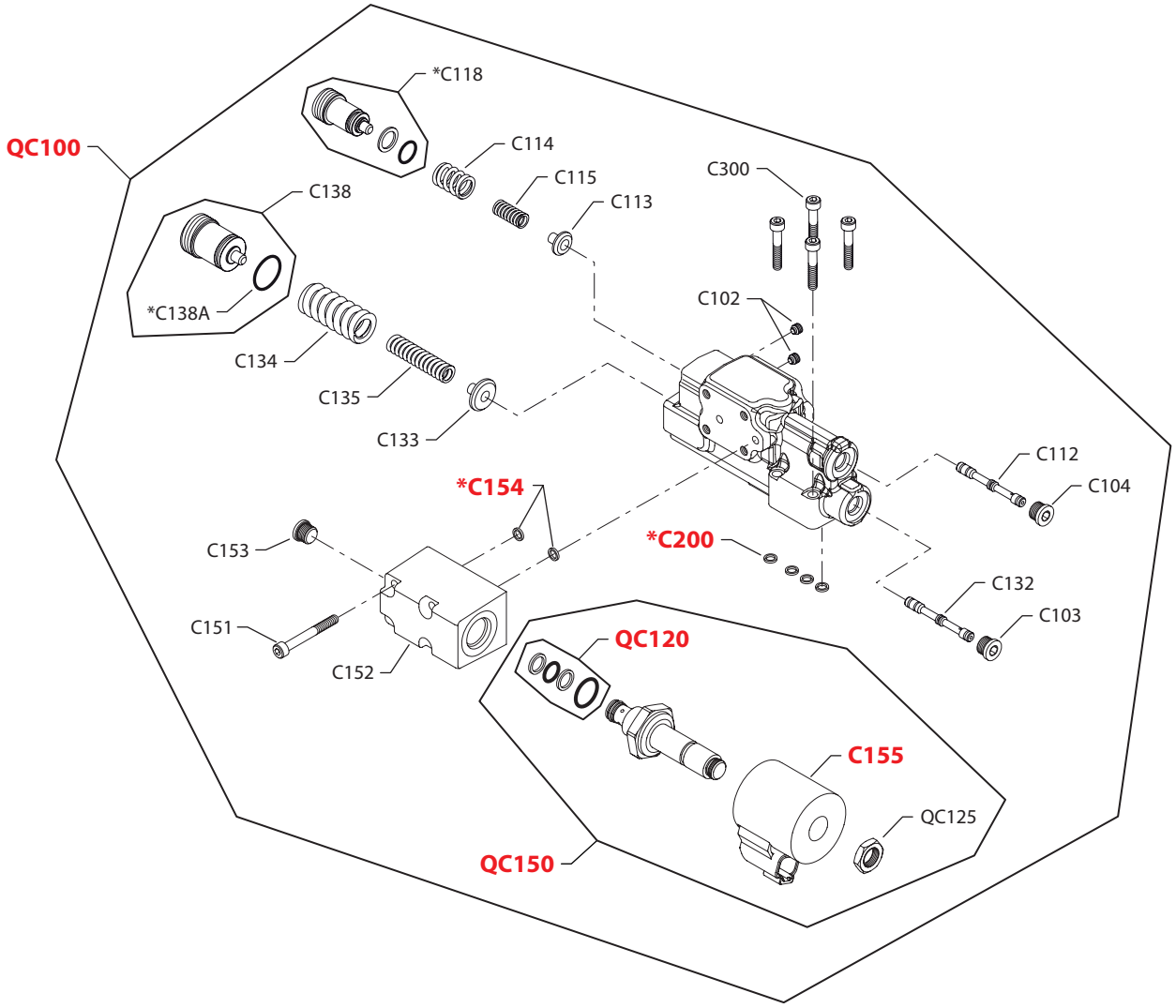

E101 700E

* = included in base motor seal kit Q210

Enlarged **bold** type item numbers are recommended part to stock for servicing.

Control

Electric dump control

Order code	Item	Date begin	Date end	Part number	Part name	Qty. per model/kit
FK	C102	15-10		4740064	Set screw	2
	C103	15-10		327007 (9005110-4400)	Plug assembly	1
	C104	15-10		327007 (9005110-4400)	Plug assembly	1
	C112	15-10		1701124	Spool	1
	C113	15-10		4740246	Spring guide	1
	C114	15-10		4740061	Spring	1
	C115	15-10		4740062	Spring	1
	C118	15-10		11062214	Adjusting plug assembly	1
	C132	15-10		1701124	Spool	1
	C133	15-10		4740247	Spring guide	1
	C134	15-10		4740051	Spring, PC outer	1
	C135	15-10		4740052	Spring, PC inner	1
	C138	15-10		11062379	Adjusting plug assembly	1
	C138A	15-10		5000656	O-ring	1
	C151	15-10		9007315-0510	Screw	4
	C152	15-10		11162921	Solenoid valve adapter, metric	1
	C153	15-10		5000572	Plug assembly, M12	1
	C154	15-10		4740154	Seal ring	2
	C155	15-10		1701563	Coil, 24 volt	1
	C200	15-10		4740154	Seal ring	4
	C300	15-10		5000164 (9007315-0507)	Screw	4
	QC100	15-10		11162616	Control Kit, electric dump, 24 volt, NC, metric	1
	QC120	15-10		11103621	Solenoid valve seal kit	1
	QC125	15-10		11104457	Nut	1
	QC150	15-10		11104464	Solenoid valve kit, 24 volt, NC	1

Control

(FM)

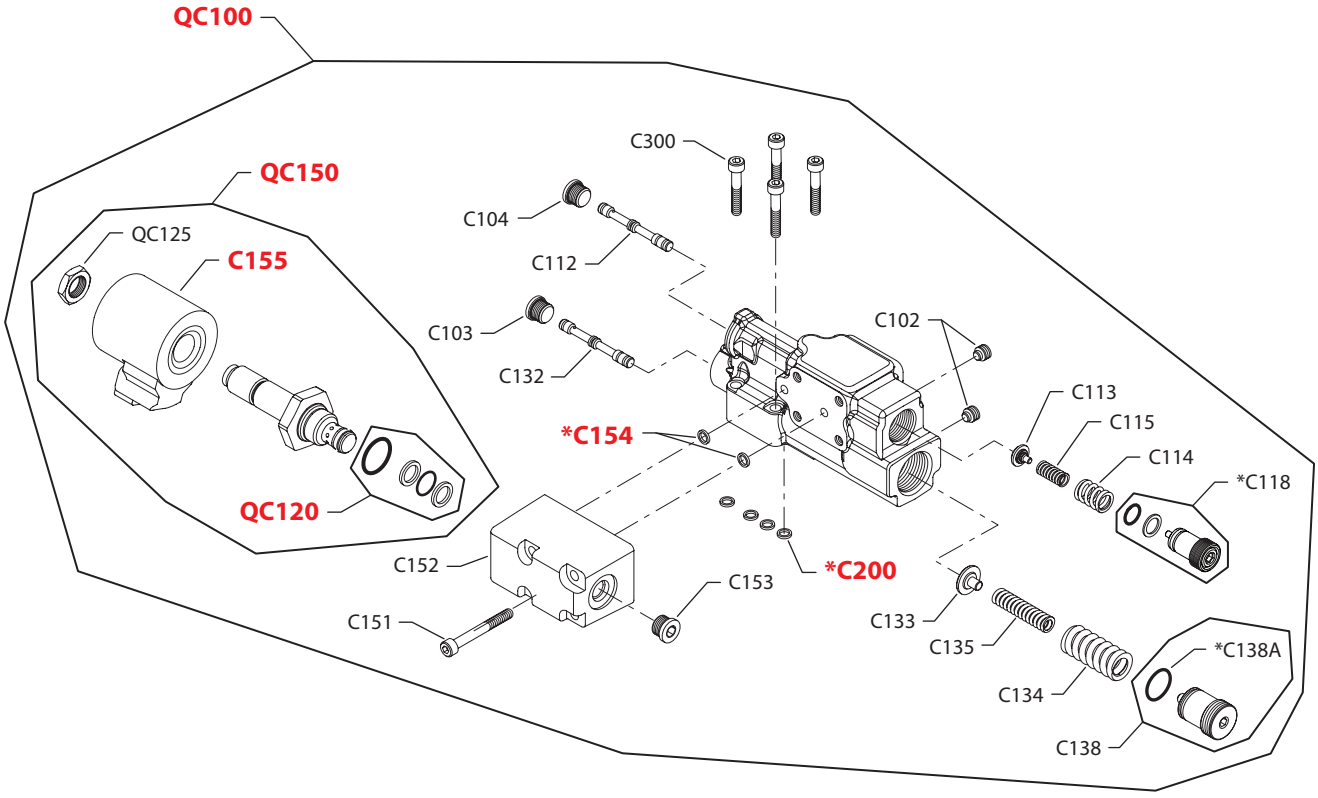

E101 622E

* = included in base motor seal kit Q210

Enlarged **bold** type item numbers are recommended part to stock for servicing.

Control

Electric dump control

Order code	Item	Date begin	Date end	Part number	Part name	Qty. per model/kit
FM	C102	16-20		4740064	Set screw	2
	C103	16-20		327007 (9005110-4400)	Plug assembly	1
	C104	16-20		327007 (9005110-4400)	Plug assembly	1
	C112	16-20		1701124	Spool	1
	C113	16-20		4740246	Spring guide	1
	C114	16-20		4740061	Spring	1
	C115	16-20		4740062	Spring	1
	C118	16-20		11062214	Adjusting plug assembly	1
	C132	16-20		1701124	Spool	1
	C133	16-20		4740247	Spring guide	1
	C134	16-20		4740051	Spring, PC outer	1
	C135	16-20		4740052	Spring, PC inner	1
	C138	16-20		11062379	Adjusting plug assembly	1
	C138A	16-20		5000656	O-ring	1
	C151	16-20		9007315-0510	Screw	4
	C152	16-20		11150082	Solenoid valve adapter (SB-2016-007)	1
	C153	16-20		327007 (9005110-4400)	Plug assembly	1
	C154	16-20		4740154	Seal ring	2
	C155	16-20		1701291	Coil, 12 volt	1
	C200	16-20		4740154	Seal ring	4
	C300	16-20		5000164 (9007315-0507)	Screw	4
	QC100	16-20		11140029	Control Kit, electric dump 12v, NO	1
	QC120	16-20		11103621	Solenoid valve seal kit	1
	QC125	16-20		11104457	Nut	1
	QC150	16-20		11104461	Solenoid valve kit, 12 volt	1

Control

(LK)

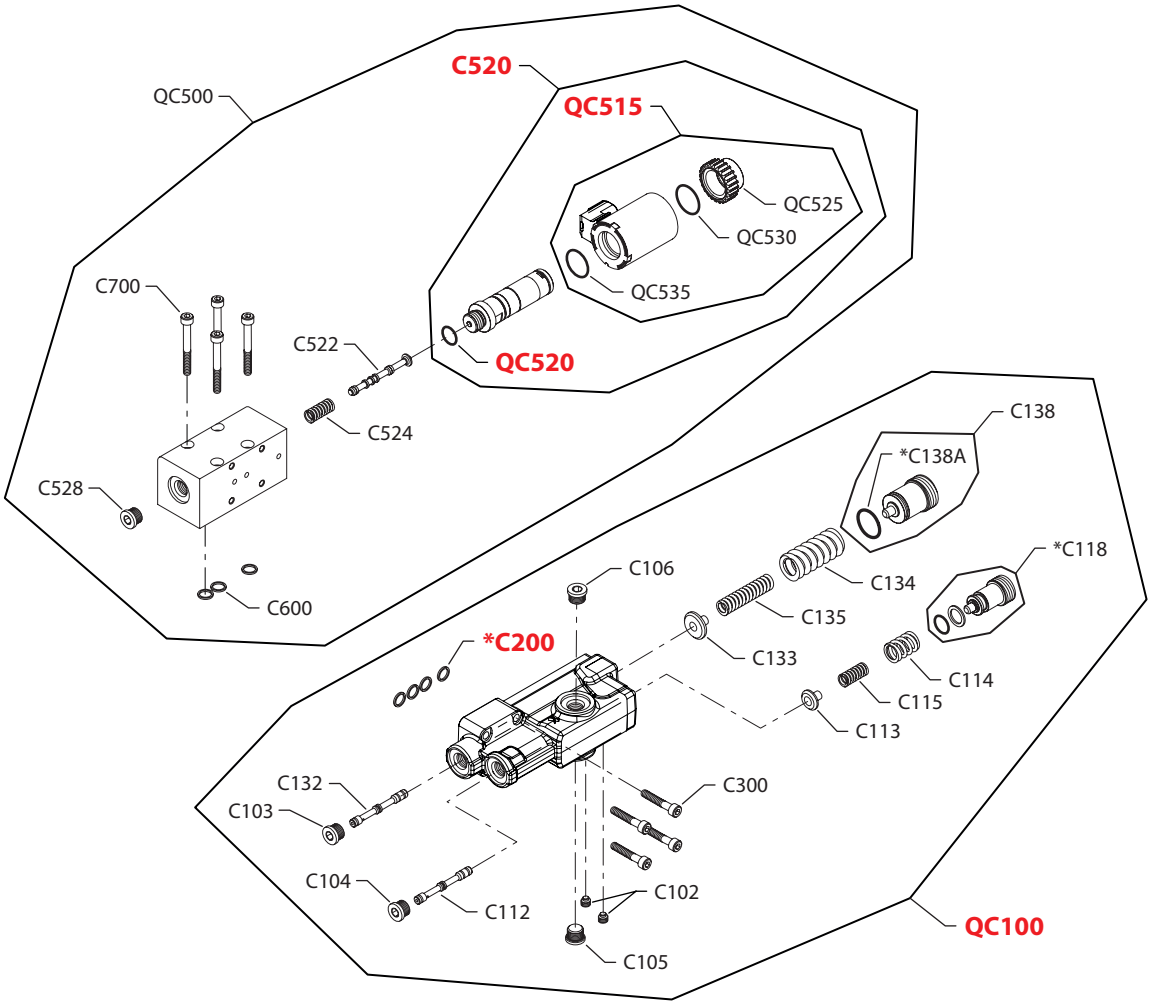

E103 506E

* = included in base motor seal kit Q210

Enlarged **bold** type item numbers are recommended part to stock for servicing.

Control

Electric override control

Order code	Item	Date begin	Date end	Part number	Part name	Qty. per model/kit
LK	C102	16-15		4740064	Set screw	2
	C103	16-15		327007 (9005110-4400)	Plug assembly	1
	C104	16-15		327007 (9005110-4400)	Plug assembly	1
	C105	16-15		327007 (9005110-4400)	Plug assembly	1
	C106	16-15		327007 (9005110-4400)	Plug assembly	1
	C112	16-15		1701124	Spool	1
	C113	16-15		4740246	Spring guide	1
	C114	16-15		4740061	Spring	1
	C115	16-15		4740062	Spring	1
	C118	16-15		11062214	Adjusting plug assembly	1
	C132	16-15		1701124	Spool	1
	C133	16-15		4740247	Spring guide	1
	C134	16-15		4740051	Spring, PC outer	1
	C135	16-15		4740052	Spring, PC inner	1
	C138	16-15		11062379	Adjusting plug assembly	1
	C138A	16-15		5000656	O-ring	1
	C200	16-15		4740154	Seal ring	4
	C300	16-15		5000164 (9007315-0507)	Screw	4
	C520	16-15		11013616	Solenoid valve, 24 volt	1
	C522	16-15		11178824	Spool	1
	C524	16-15		11044985	Spring	1
	C528	16-15		327007 (9005110-4400)	Plug assembly	1
	C600	16-15		4740154	Seal ring	3
	C700	16-15		9007315-0510	Screw	4
	QC100	16-15		11112208	Control Kit, LS	1
	QC500	16-15		11174637	Solenoid override valve kit, 24 volt, left	1
	QC515	16-15		11031764	Coil kit, 24 volt	1
	QC520	16-15		085043 (9004201-3700)	O-ring	1
	QC525	16-15		11027046	Nut	1
	QC530	16-15		063172	O-ring	1
	QC535	16-15		11031608	O-ring	1

Control

(LL)

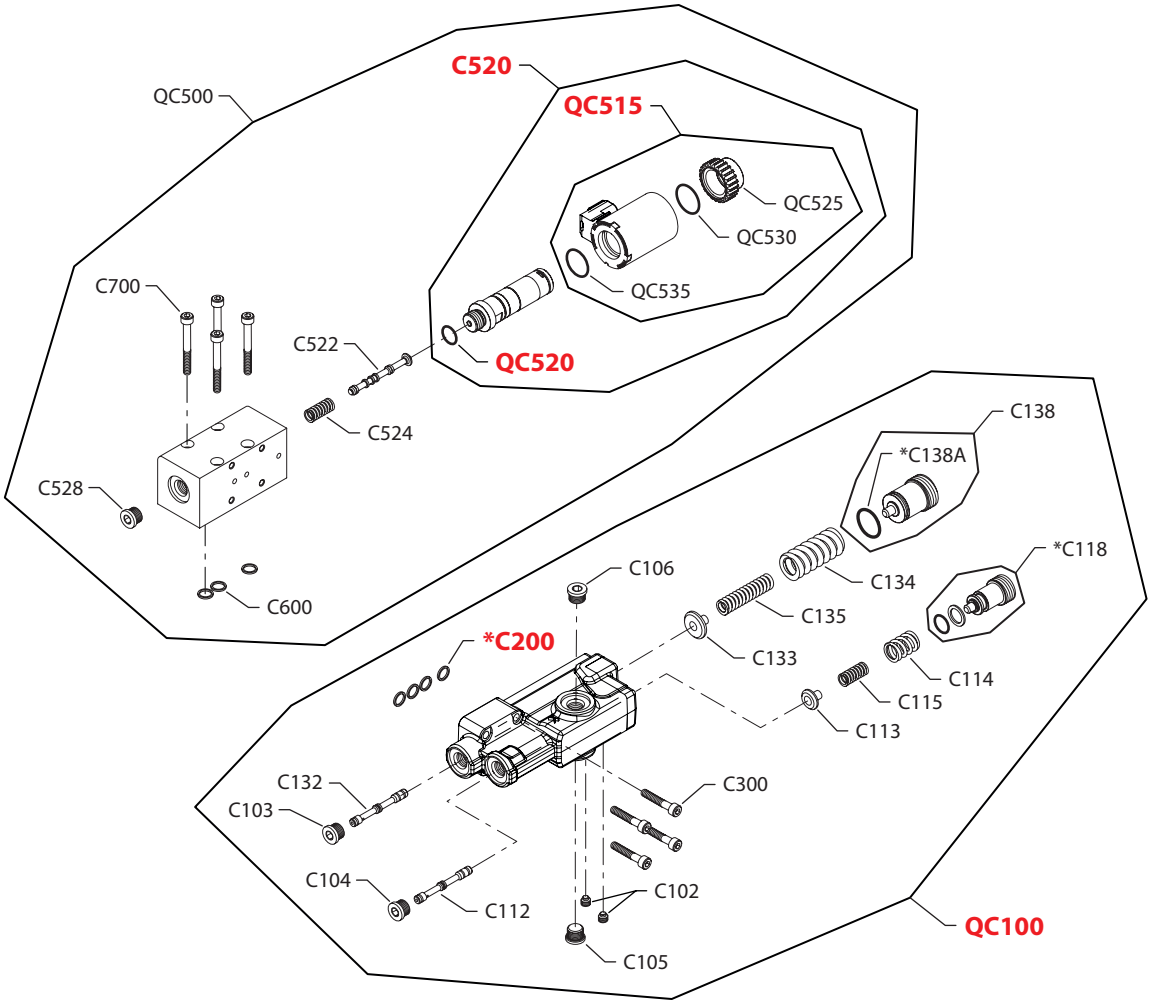

E103 506E

* = included in base motor seal kit Q210

Enlarged **bold** type item numbers are recommended part to stock for servicing.

Control

Electric override control

Order code	Item	Date begin	Date end	Part number	Part name	Qty. per model/kit
LL	C102	16-05		4740064	Set screw	2
	C103	16-05		327007 (9005110-4400)	Plug assembly	1
	C104	16-05		327007 (9005110-4400)	Plug assembly	1
	C105	16-05		327007 (9005110-4400)	Plug assembly	1
	C106	16-05		327007 (9005110-4400)	Plug assembly	1
	C112	16-05		1701124	Spool	1
	C113	16-05		4740246	Spring guide	1
	C114	16-05		4740061	Spring	1
	C115	16-05		4740062	Spring	1
	C118	16-05		11062214	Adjusting plug assembly	1
	C132	16-05		1701124	Spool	1
	C133	16-05		4740247	Spring guide	1
	C134	16-05		4740051	Spring, PC outer	1
	C135	16-05		4740052	Spring, PC inner	1
	C138	16-05		11062379	Adjusting plug assembly	1
	C138A	16-05		5000656	O-ring	1
	C200	16-05		4740154	Seal ring	4
	C300	16-05		5000164 (9007315-0507)	Screw	4
	C520	16-05		11013615	Solenoid valve, 12 volt	1
	C522	16-05		11178824	Spool	1
	C524	16-05		11044985	Spring	1
	C528	16-05		327007 (9005110-4400)	Plug assembly	1
	C600	16-05		4740154	Seal ring	3
	C700	16-05		9007315-0510	Screw	4
	QC100	16-05		11112208	Control Kit, LS	1
	QC500	16-05		11176742	Solenoid override valve kit, 12 volt, left	1
	QC515	16-05		11031763	Coil kit, 12 volt	1
	QC520	16-05		085043 (9004201-3700)	O-ring	1
	QC525	16-05		11027046	Nut	1
	QC530	16-05		063172	O-ring	1
	QC535	16-05		11031608	O-ring	1

Control

(LQ)

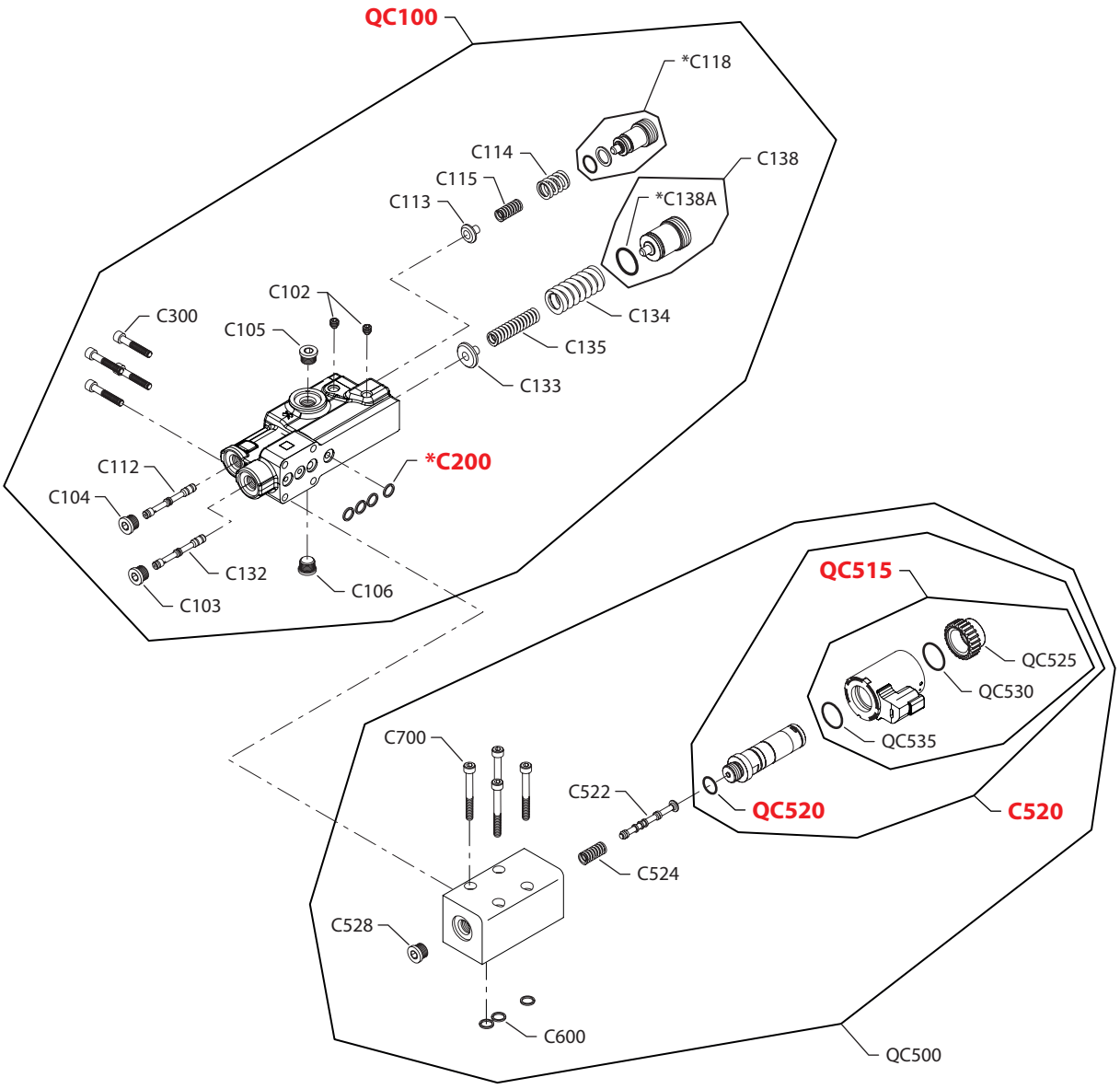

E103 507E

* = included in base motor seal kit Q210

Enlarged **bold** type item numbers are recommended part to stock for servicing.

Control

Electric override control

Order code	Item	Date begin	Date end	Part number	Part name	Qty. per model/kit
LQ	C102	16-15		4740064	Set screw	2
	C103	16-15		327007 (9005110-4400)	Plug assembly	1
	C104	16-15		327007 (9005110-4400)	Plug assembly	1
	C105	16-15		327007 (9005110-4400)	Plug assembly	1
	C106	16-15		327007 (9005110-4400)	Plug assembly	1
	C112	16-15		1701124	Spool	1
	C113	16-15		4740246	Spring guide	1
	C114	16-15		4740061	Spring	1
	C115	16-15		4740062	Spring	1
	C118	16-15		11062214	Adjusting plug assembly	1
	C132	16-15		1701124	Spool	1
	C133	16-15		4740247	Spring guide	1
	C134	16-15		4740051	Spring, PC outer	1
	C135	16-15		4740052	Spring, PC inner	1
	C138	16-15		11062379	Adjusting plug assembly	1
	C138A	16-15		5000656	O-ring	1
	C200	16-15		4740154	Seal ring	4
	C300	16-15		5000164 (9007315-0507)	Screw	4
	C520	16-15		11013616	Solenoid valve, 24 volt	1
	C522	16-15		11178824	Spool	1
	C524	16-15		11044985	Spring	1
	C528	16-15		327007 (9005110-4400)	Plug assembly	1
	C600	16-15		4740154	Seal ring	3
	C700	16-15		9007315-0510	Screw	4
	QC100	16-15		11112208	Control Kit, LS	1
	QC500	16-15		11174636	Solenoid override valve kit, 24 volt, right	1
	QC515	16-15		11031764	Coil kit, 24 volt	1
	QC520	16-15		085043 (9004201-3700)	O-ring	1
	QC525	16-15		11027046	Nut	1
	QC530	16-15		063172	O-ring	1
	QC535	16-15		11031608	O-ring	1

Control

(LR)

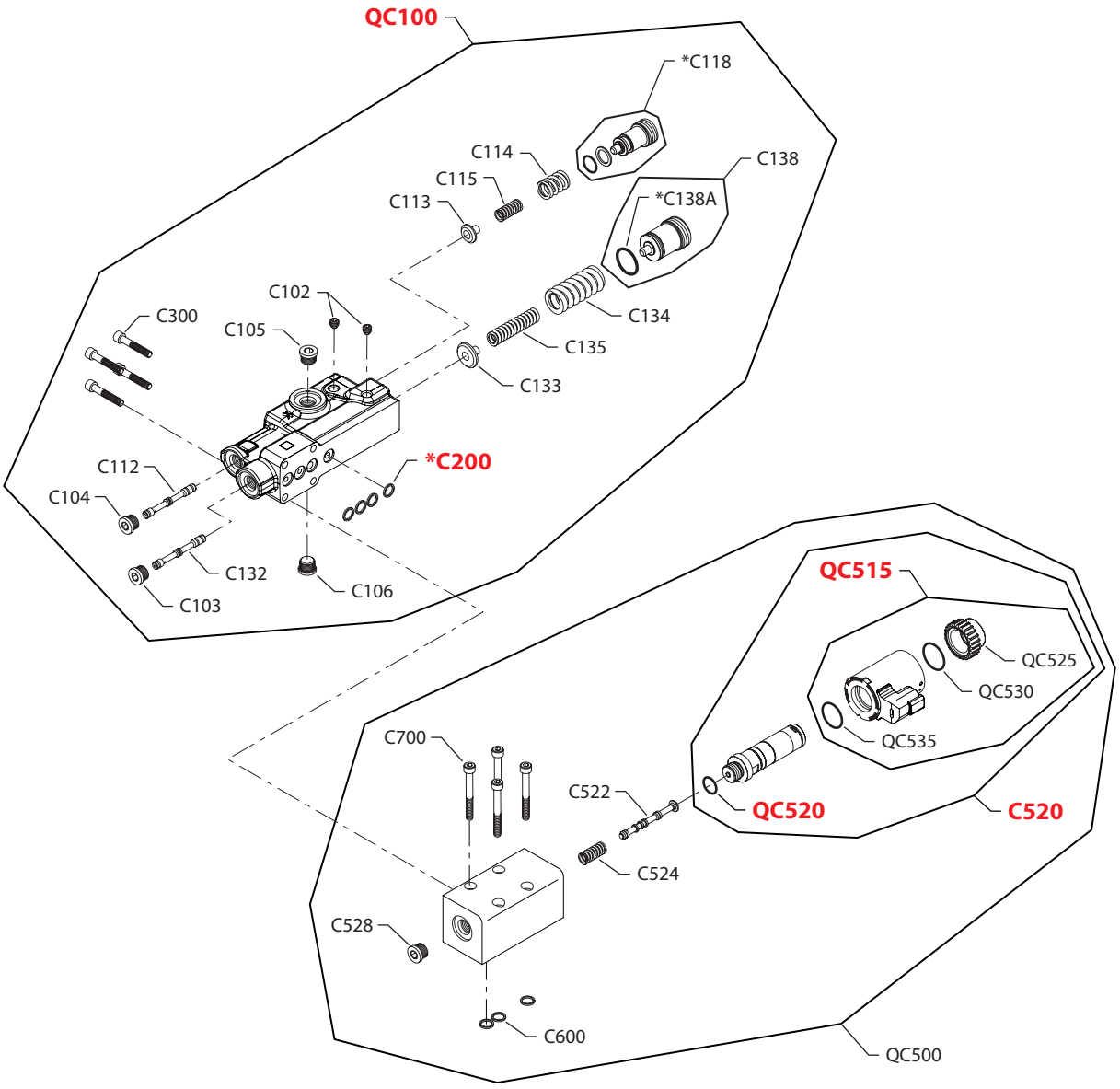

E103 507E

* = included in base motor seal kit Q210

Enlarged **bold** type item numbers are recommended part to stock for servicing.

Control

Electric override control

Order code	Item	Date begin	Date end	Part number	Part name	Qty. per model/kit
LR	C102	16-15		4740064	Set screw	2
	C103	16-15		327007 (9005110-4400)	Plug assembly	1
	C104	16-15		327007 (9005110-4400)	Plug assembly	1
	C105	16-15		327007 (9005110-4400)	Plug assembly	1
	C106	16-15		327007 (9005110-4400)	Plug assembly	1
	C112	16-15		1701124	Spool	1
	C113	16-15		4740246	Spring guide	1
	C114	16-15		4740061	Spring	1
	C115	16-15		4740062	Spring	1
	C118	16-15		11062214	Adjusting plug assembly	1
	C132	16-15		1701124	Spool	1
	C133	16-15		4740247	Spring guide	1
	C134	16-15		4740051	Spring, PC outer	1
	C135	16-15		4740052	Spring, PC inner	1
	C138	16-15		11062379	Adjusting plug assembly	1
	C138A	16-15		5000656	O-ring	1
	C200	16-15		4740154	Seal ring	4
	C300	16-15		5000164 (9007315-0507)	Screw	4
	C520	16-15		11013615	Solenoid valve, 12 volt	1
	C522	16-15		11178824	Spool	1
	C524	16-15		11044985	Spring	1
	C528	16-15		327007 (9005110-4400)	Plug assembly	1
	C600	16-15		4740154	Seal ring	3
	C700	16-15		9007315-0510	Screw	4
	QC100	16-15		11112208	Control Kit, LS	1
	QC500	16-15		11176731	Solenoid override valve kit, 12 volt, right	1
	QC515	16-15		11031763	Coil kit, 12 volt	1
	QC520	16-15		085043 (9004201-3700)	O-ring	1
	QC525	16-15		11027046	Nut	1
	QC530	16-15		063172	O-ring	1
	QC535	16-15		11031608	O-ring	1

Control

(TA)

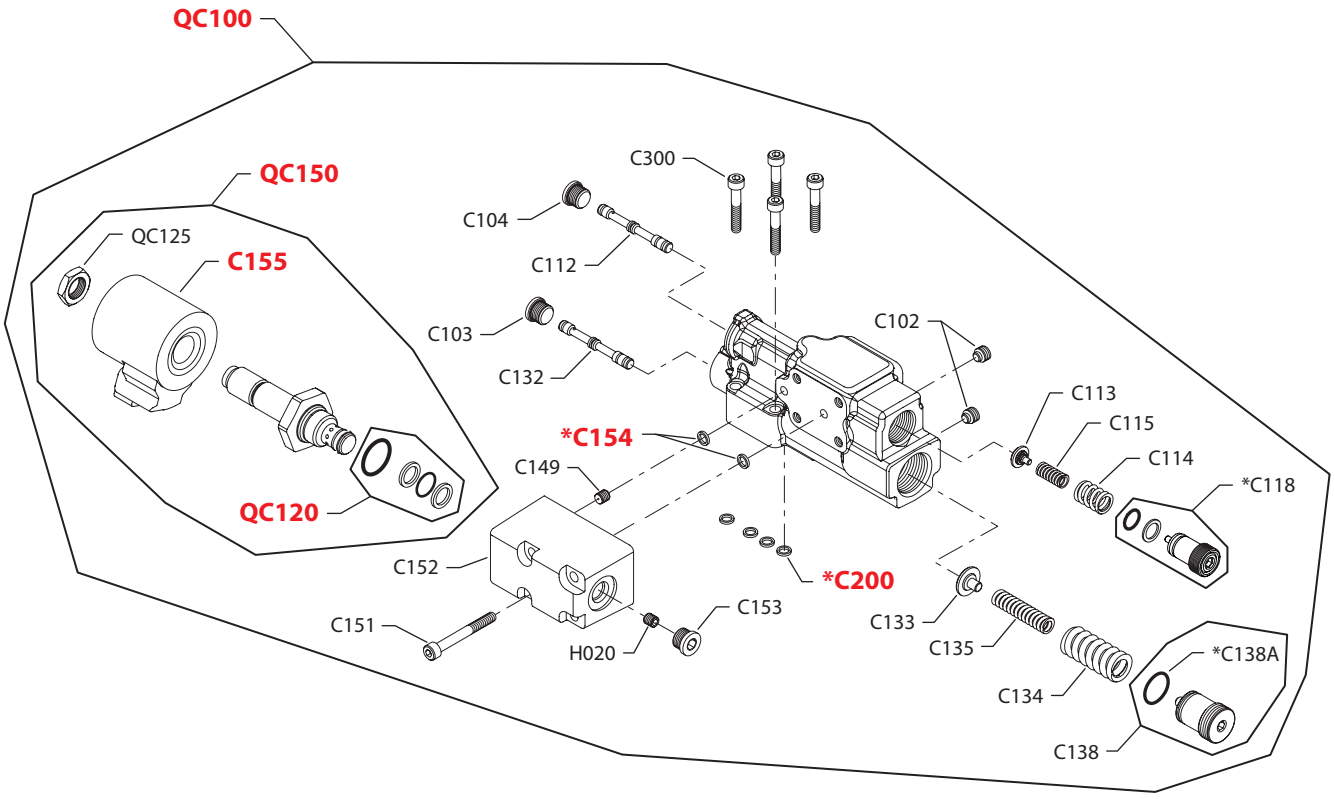

E103 217E

* = included in base motor seal kit Q210

Enlarged **bold** type item numbers are recommended part to stock for servicing.

Control

Electric control

Order code	Item	Date begin	Date end	Part number	Part name	Qty. per model/kit
TA	C102	13-36		4740064	Set screw	2
	C103	13-36		327007 (9005110-4400)	Plug assembly	1
	C104	13-36		327007 (9005110-4400)	Plug assembly	1
	C112	13-36		1701124	Spool	1
	C113	13-36		4740246	Spring guide	1
	C114	13-36		4740061	Spring	1
	C115	13-36		4740062	Spring	1
	C118	13-36		11062214	Adjusting plug assembly	1
	C132	13-36		1701124	Spool	1
	C133	13-36		4740247	Spring guide	1
	C134	13-36		4740051	Spring, PC outer	1
	C135	13-36		4740052	Spring, PC inner	1
	C138	13-36		11062379	Adjusting plug assembly	1
	C138A	13-36		5000656	O-ring	1
	C149	13-36		739144	Orifice plug, 0.8mm	1
	C151	13-36		9007315-0510	Screw	4
	C152	13-36		11150082	Solenoid valve adapter	1
	C153	13-36		327007 (9005110-4400)	Plug assembly	1
	C154	13-36		4740154	Seal ring	2
	C155	13-36		1701291	Coil, 12 volt	1
	C200	13-36		4740154	Seal ring	4
	C300	13-36		5000164 (9007315-0507)	Screw	4
	H020	13-36		11062004	Orifice plug, 0.8mm	1
	H020	13-36		11066593	Orifice plug, 1.0mm	1
	QC100	13-36		11150230	Control Kit, electric 12v, NC	1
	QC120	13-36		11103621	Solenoid valve seal kit	1
	QC125	13-36		11104460	Nut	1
	QC150	13-36		11104467	Solenoid valve kit, 12 volt	1

Control

(TB)

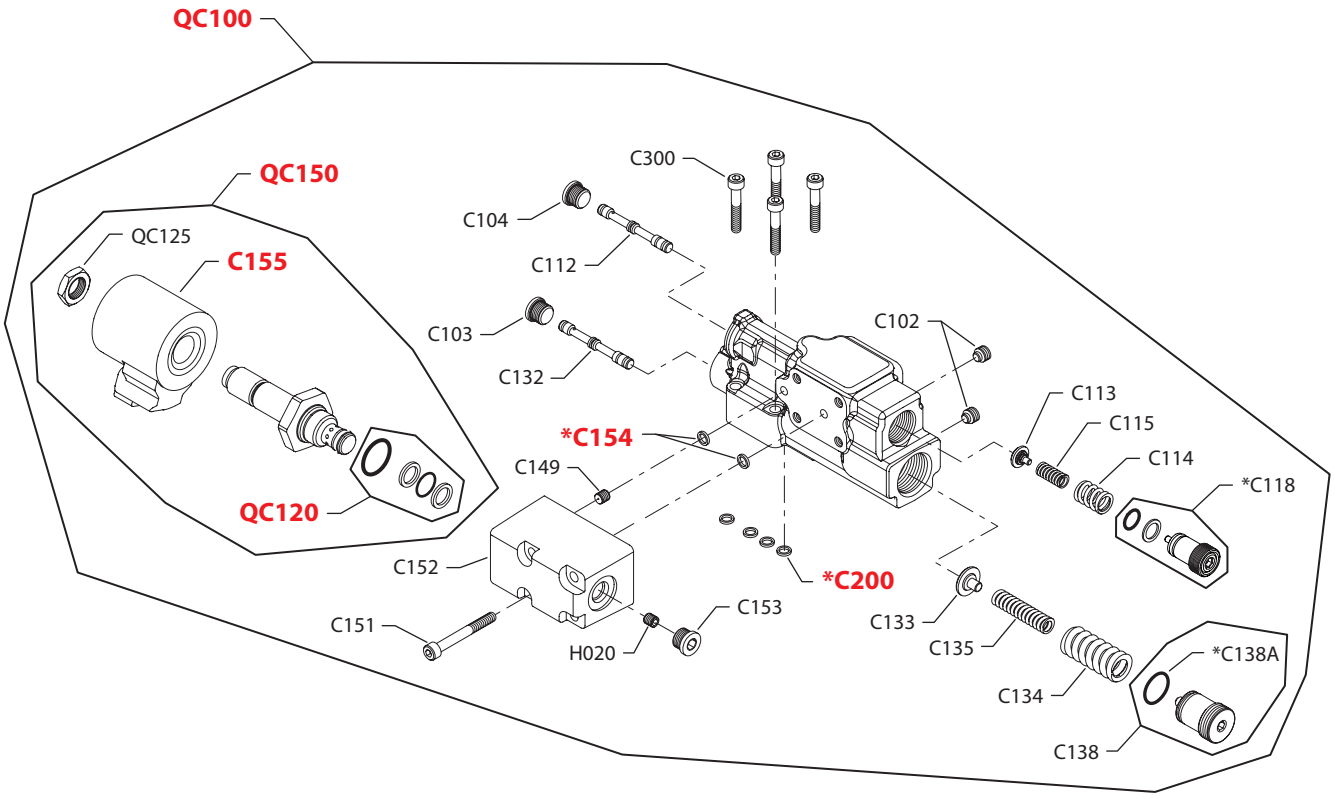

E103 217E

* = included in base motor seal kit Q210

Enlarged **bold** type item numbers are recommended part to stock for servicing.

Control

Electric control

Order code	Item	Date begin	Date end	Part number	Part name	Qty. per model/kit
TB	C102	13-36		4740064	Set screw	2
	C103	13-36		327007 (9005110-4400)	Plug assembly	1
	C104	13-36		327007 (9005110-4400)	Plug assembly	1
	C112	13-36		1701124	Spool	1
	C113	13-36		4740246	Spring guide	1
	C114	13-36		4740061	Spring	1
	C115	13-36		4740062	Spring	1
	C118	13-36		11062214	Adjusting plug assembly	1
	C132	13-36		1701124	Spool	1
	C133	13-36		4740247	Spring guide	1
	C134	13-36		4740051	Spring, PC outer	1
	C135	13-36		4740052	Spring, PC inner	1
	C138	13-36		11062379	Adjusting plug assembly	1
	C138A	13-36		5000656	O-ring	1
	C149	13-36		739144	Orifice plug, 0.8mm	1
	C151	13-36		9007315-0510	Screw	4
	C152	13-36		11150082	Solenoid valve adapter	1
	C153	13-36		327007 (9005110-4400)	Plug assembly	1
	C154	13-36		4740154	Seal ring	2
	C155	13-36		1701563	Coil, 24 volt	1
	C200	13-36		4740154	Seal ring	4
	C300	13-36		5000164 (9007315-0507)	Screw	4
	H020	13-36		11062004	Orifice plug, 0.8mm	1
	H020	13-36		11066593	Orifice plug, 1.0mm	1
	QC100	13-36		11150231	Control Kit, electric 24v, NC	1
	QC120	13-36		11103621	Solenoid valve seal kit	1
	QC125	13-36		11104460	Nut	1
	QC150	13-36		11104468	Solenoid valve kit, 24 volt	1

Control

(TC)

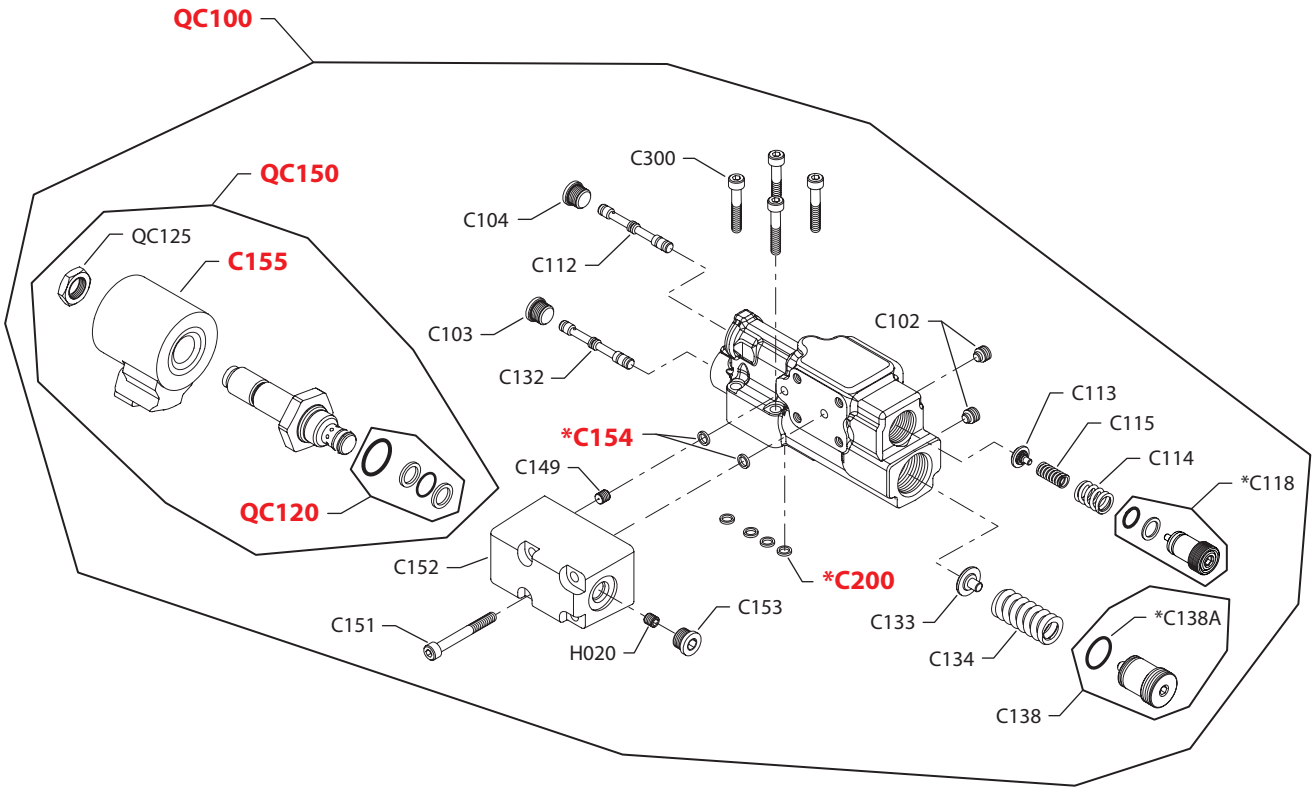

E103 218E

* = included in base motor seal kit Q210

Enlarged **bold** type item numbers are recommended part to stock for servicing.

Control

Electric control

Order code	Item	Date begin	Date end	Part number	Part name	Qty. per model/kit
TC	C102	13-36		4740064	Set screw	2
	C103	13-36		327007 (9005110-4400)	Plug assembly	1
	C104	13-36		327007 (9005110-4400)	Plug assembly	1
	C112	13-36		1701124	Spool	1
	C113	13-36		4740246	Spring guide	1
	C114	13-36		4740061	Spring	1
	C115	13-36		4740062	Spring	1
	C118	13-36		11062214	Adjusting plug assembly	1
	C132	13-36		1701124	Spool	1
	C133	13-36		4740247	Spring guide	1
	C134	13-36		4740324	Spring, PC hevy	1
	C138	13-36		1700597	Adjusting plug assembly	1
	C138A	13-36		5000656	O-ring	1
	C149	13-36		739144	Orifice plug, 0.8mm	1
	C151	13-36		9007315-0510	Screw	4
	C152	13-36		11150082	Solenoid valve adapter (SB-2016-007)	1
	C153	13-36		327007 (9005110-4400)	Plug assembly	1
	C154	13-36		4740154	Seal ring	2
	C155	13-36		1701291	Coil, 12 volt	1
	C200	13-36		4740154	Seal ring	4
	C300	13-36		5000164 (9007315-0507)	Screw	4
	H020	13-36		11062004	Orifice plug, 0.8mm	1
	H020	13-36		11066593	Orifice plug, 1.0mm	1
	QC100	13-36		11150234	Control Kit, electric 12v, NC	1
	QC120	13-36		11103621	Solenoid valve seal kit	1
	QC125	13-36		11104460	Nut	1
	QC150	13-36		11104467	Solenoid valve kit, 12 volt	1

Control

(TD)

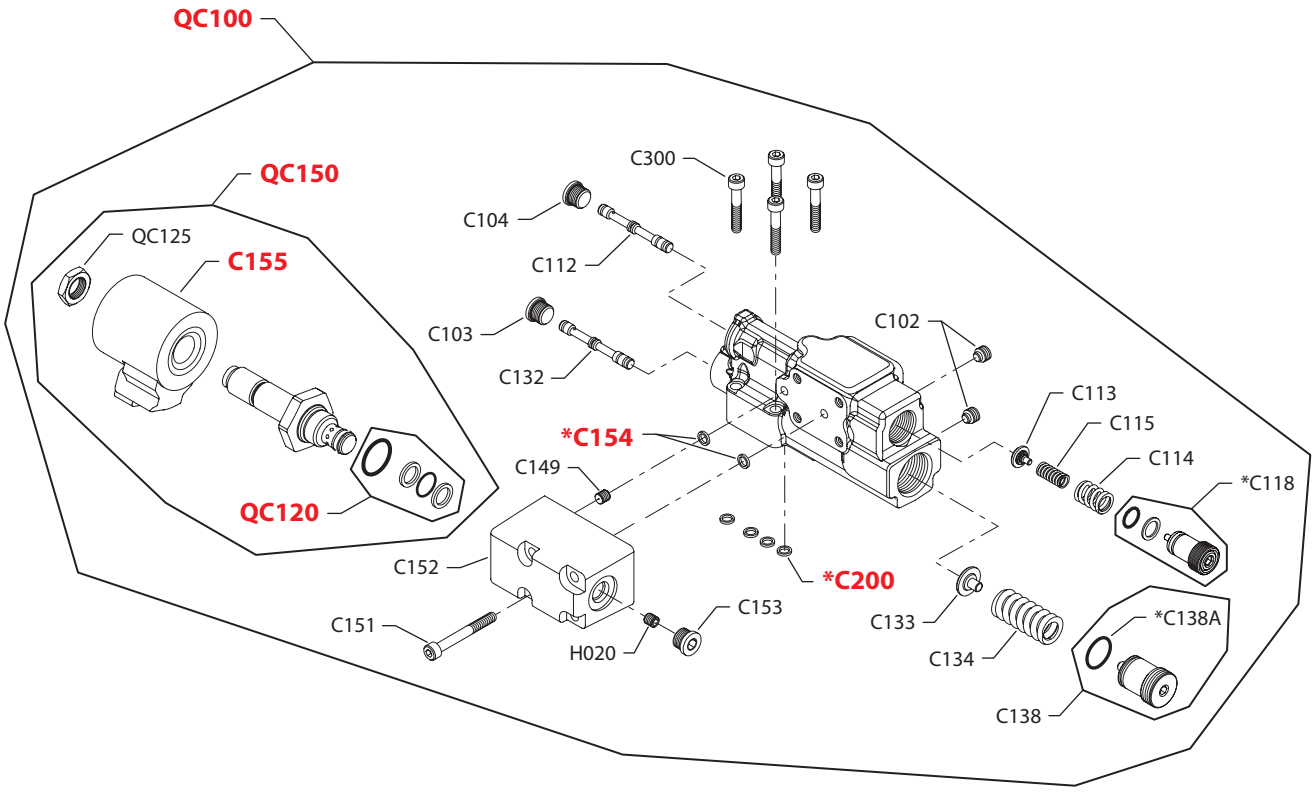

E103 218E

* = included in base motor seal kit Q210

Enlarged **bold** type item numbers are recommended part to stock for servicing.

Control

Electric control

Order code	Item	Date begin	Date end	Part number	Part name	Qty. per model/kit
TD	C102	13-36		4740064	Set screw	2
	C103	13-36		327007 (9005110-4400)	Plug assembly	1
	C104	13-36		327007 (9005110-4400)	Plug assembly	1
	C112	13-36		1701124	Spool	1
	C113	13-36		4740246	Spring guide	1
	C114	13-36		4740061	Spring	1
	C115	13-36		4740062	Spring	1
	C118	13-36		11062214	Adjusting plug assembly	1
	C132	13-36		1701124	Spool	1
	C133	13-36		4740247	Spring guide	1
	C134	13-36		4740324	Spring, PC hevy	1
	C138	13-36		1700597	Adjusting plug assembly	1
	C138A	13-36		5000656	O-ring	1
	C149	13-36		739144	Orifice plug, 0.8mm	1
	C151	13-36		9007315-0510	Screw	4
	C152	13-36		11150082	Solenoid valve adapter (SB-2016-007)	1
	C153	13-36		327007 (9005110-4400)	Plug assembly	1
	C154	13-36		4740154	Seal ring	2
	C155	13-36		1701563	Coil, 24 volt	1
	C200	13-36		4740154	Seal ring	4
	C300	13-36		5000164 (9007315-0507)	Screw	4
	H020	13-36		11062004	Orifice plug, 0.8mm	1
	H020	13-36		11066593	Orifice plug, 1.0mm	1
	QC100	13-36		11150235	Control Kit, electric 24v, NC	1
	QC120	13-36		11103621	Solenoid valve seal kit	1
	QC125	13-36		11104460	Nut	1
	QC150	13-36		11104468	Solenoid valve kit, 24 volt	1

Control

(TE)

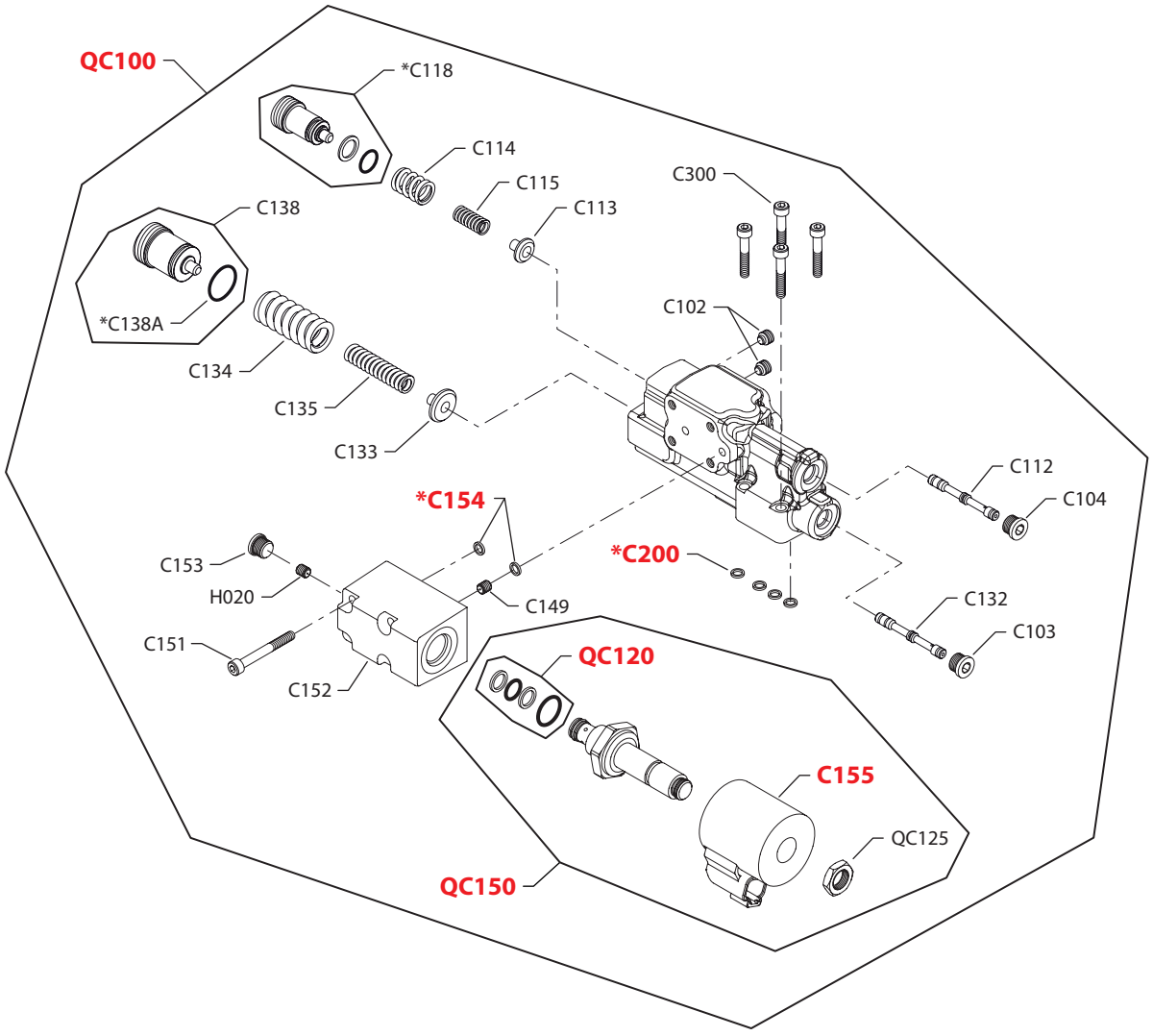

E103 219E

* = included in base motor seal kit Q210

Enlarged **bold** type item numbers are recommended part to stock for servicing.

Control

Electric control

Order code	Item	Date begin	Date end	Part number	Part name	Qty. per model/kit
TE	C102	13-36		4740064	Set screw	2
	C103	13-36		327007 (9005110-4400)	Plug assembly	1
	C104	13-36		327007 (9005110-4400)	Plug assembly	1
	C112	13-36		1701124	Spool	1
	C113	13-36		4740246	Spring guide	1
	C114	13-36		4740061	Spring	1
	C115	13-36		4740062	Spring	1
	C118	13-36		11062214	Adjusting plug assembly	1
	C132	13-36		1701124	Spool	1
	C133	13-36		4740247	Spring guide	1
	C134	13-36		4740051	Spring, PC outer	1
	C135	13-36		4740052	Spring, PC inner	1
	C138	13-36		11062379	Adjusting plug assembly	1
	C138A	13-36		5000656	O-ring	1
	C149	13-36		739144	Orifice plug, 0.8mm	1
	C151	13-36		9007315-0510	Screw	4
	C152	13-36		11150082	Solenoid valve adapter	1
	C153	13-36		327007 (9005110-4400)	Plug assembly	1
	C154	13-36		4740154	Seal ring	2
	C155	13-36		1701291	Coil, 12 volt	1
	C200	13-36		4740154	Seal ring	4
	C300	13-36		5000164 (9007315-0507)	Screw	4
	H020	13-36		11062004	Orifice plug, 0.8mm	1
	H020	13-36		11066593	Orifice plug, 1.0mm	1
	QC100	13-36		11150237	Control Kit, electric 12v, NC	1
	QC120	13-36		11103621	Solenoid valve seal kit	1
	QC125	13-36		11104460	Nut	1
	QC150	13-36		11104467	Solenoid valve kit, 12 volt	1

Control

(TF)

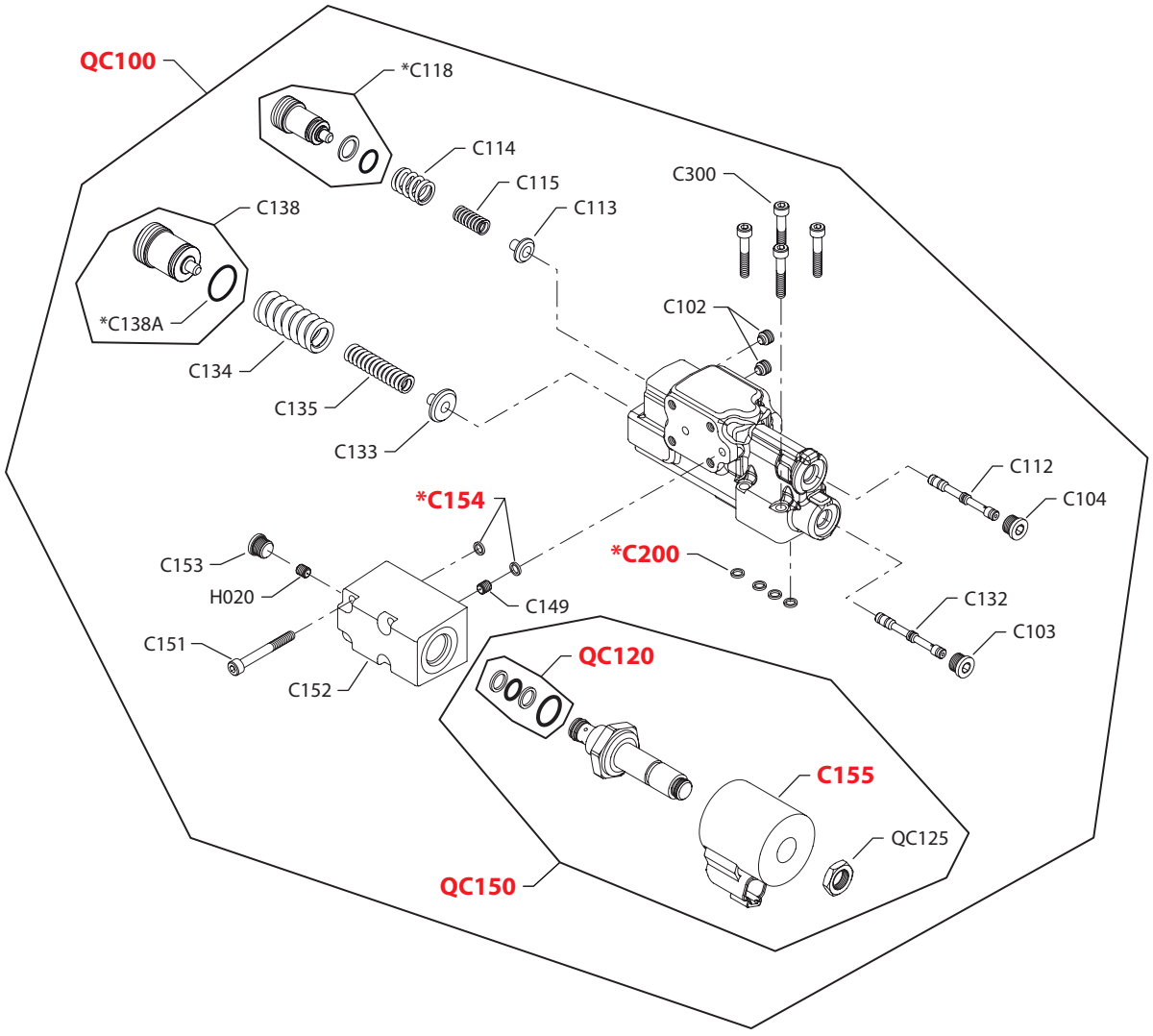

E103 219E

* = included in base motor seal kit Q210

Enlarged **bold** type item numbers are recommended part to stock for servicing.

Control

Electric control

Order code	Item	Date begin	Date end	Part number	Part name	Qty. per model/kit
TF	C102	13-36		4740064	Set screw	2
	C103	13-36		327007 (9005110-4400)	Plug assembly	1
	C104	13-36		327007 (9005110-4400)	Plug assembly	1
	C112	13-36		1701124	Spool	1
	C113	13-36		4740246	Spring guide	1
	C114	13-36		4740061	Spring	1
	C115	13-36		4740062	Spring	1
	C118	13-36		11062214	Adjusting plug assembly	1
	C132	13-36		1701124	Spool	1
	C133	13-36		4740247	Spring guide	1
	C134	13-36		4740051	Spring, PC outer	1
	C135	13-36		4740052	Spring, PC inner	1
	C138	13-36		11062379	Adjusting plug assembly	1
	C138A	13-36		5000656	O-ring	1
	C149	13-36		739144	Orifice plug, 0.8mm	1
	C151	13-36		9007315-0510	Screw	4
	C152	13-36		11150082	Solenoid valve adapter	1
	C153	13-36		327007 (9005110-4400)	Plug assembly	1
	C154	13-36		4740154	Seal ring	2
	C155	13-36		1701563	Coil, 24 volt	1
	C200	13-36		4740154	Seal ring	4
	C300	13-36		5000164 (9007315-0507)	Screw	4
	H020	13-36		11062004	Orifice plug, 0.8mm	1
	H020	13-36		11066593	Orifice plug, 1.0mm	1
	QC100	13-36		11150238	Control Kit, electric 24v, NC	1
	QC120	13-36		11103621	Solenoid valve seal kit	1
	QC125	13-36		11104460	Nut	1
	QC150	13-36		11104468	Solenoid valve kit, 24 volt	1

Control

(TG)

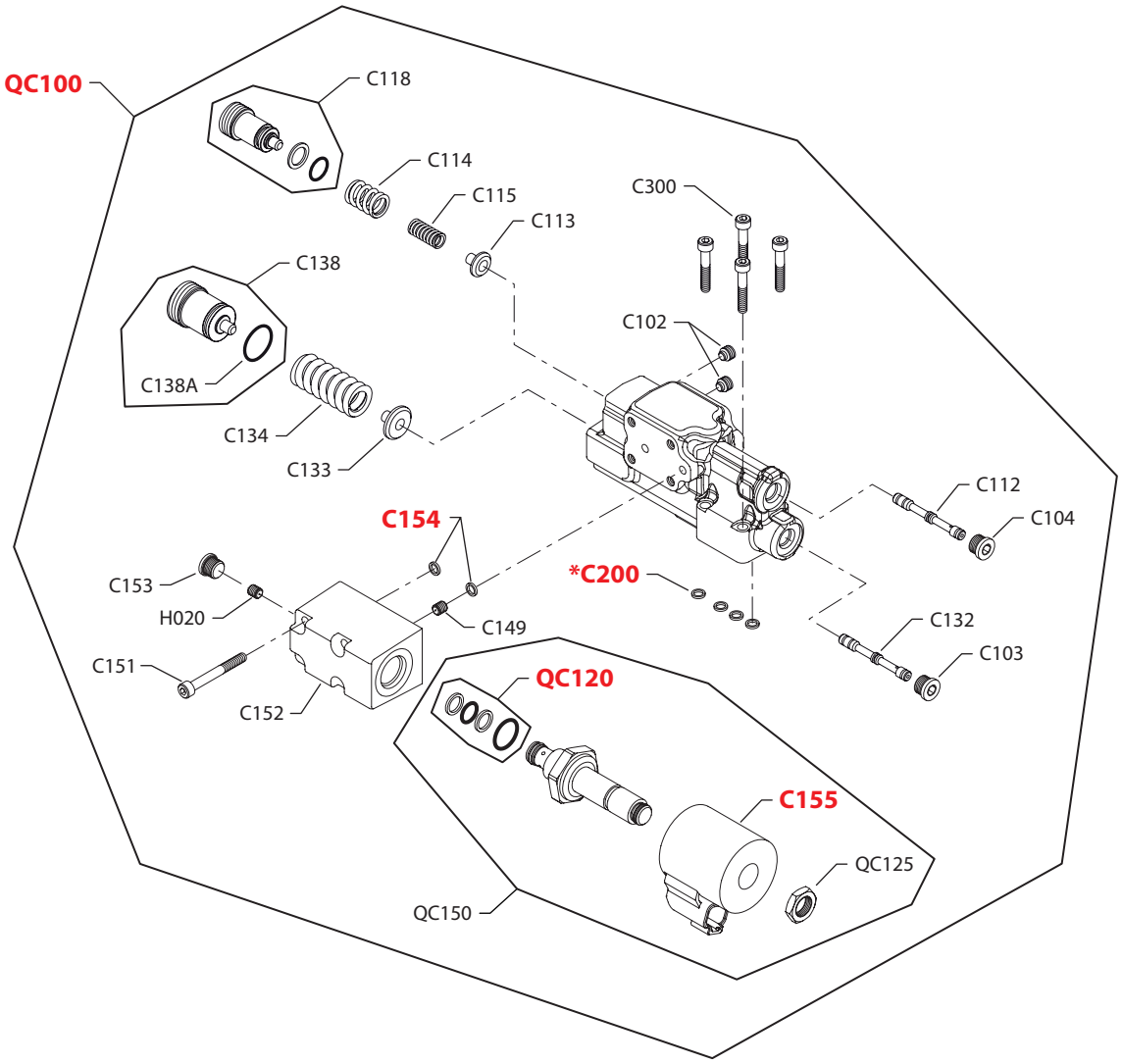

E103 243E

* = included in base motor seal kit Q210

Enlarged **bold** type item numbers are recommended part to stock for servicing.

Control

Electric control

Order code	Item	Date begin	Date end	Part number	Part name	Qty. per model/kit
TG	C102	13-36		4740064	Set screw	2
	C103	13-36		327007 (9005110-4400)	Plug assembly	1
	C104	13-36		327007 (9005110-4400)	Plug assembly	1
	C112	13-36		1701124	Spool	1
	C113	13-36		4740246	Spring guide	1
	C114	13-36		4740061	Spring	1
	C115	13-36		4740062	Spring	1
	C118	13-36		11062214	Adjusting plug assembly	1
	C132	13-36		1701124	Spool	1
	C133	13-36		4740247	Spring guide	1
	C134	13-36		4740324	Spring, PC hevy	1
	C138	13-36		1700597	Adjusting plug assembly	1
	C138A	13-36		5000656	O-ring	1
	C149	13-36		739144	Orifice plug, 0.8mm	1
	C151	13-36		9007315-0510	Screw	4
	C152	13-36		11150082	Solenoid valve adapter (SB-2016-007)	1
	C153	13-36		327007 (9005110-4400)	Plug assembly	1
	C154	13-36		4740154	Seal ring	2
	C155	13-36		1701291	Coil, 12 volt	1
	C200	13-36		4740154	Seal ring	4
	C300	13-36		5000164 (9007315-0507)	Screw	4
	H020	13-36		11062004	Orifice plug, 0.8mm	1
	H020	13-36		11066593	Orifice plug, 1.0mm	1
	QC100	13-36		11150239	Control Kit, electric 12v, NC	1
	QC120	13-36		11103621	Solenoid valve seal kit	1
	QC125	13-36		11104460	Nut	1
	QC150	13-36		11104467	Solenoid valve kit, 12 volt	1

Control

(TH)

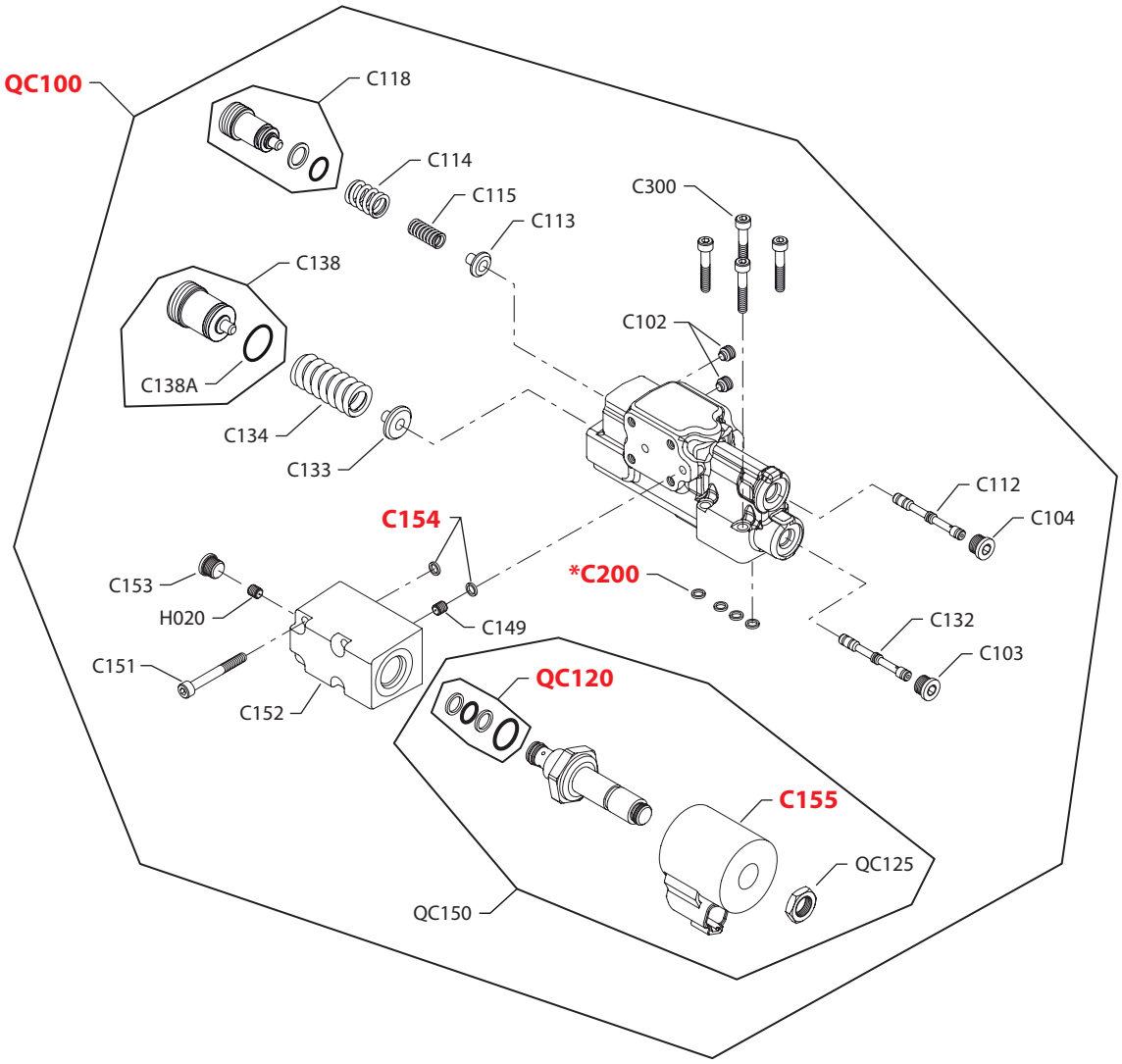

E103 243E

* = included in base motor seal kit Q210

Enlarged **bold** type item numbers are recommended part to stock for servicing.

Control

Electric control

Order code	Item	Date begin	Date end	Part number	Part name	Qty. per model/kit
TH	C102	13-36		4740064	Set screw	2
	C103	13-36		327007 (9005110-4400)	Plug assembly	1
	C104	13-36		327007 (9005110-4400)	Plug assembly	1
	C112	13-36		1701124	Spool	1
	C113	13-36		4740246	Spring guide	1
	C114	13-36		4740061	Spring	1
	C115	13-36		4740062	Spring	1
	C118	13-36		11062214	Adjusting plug assembly	1
	C132	13-36		1701124	Spool	1
	C133	13-36		4740247	Spring guide	1
	C134	13-36		4740324	Spring, PC hevy	1
	C138	13-36		1700597	Adjusting plug assembly	1
	C138A	13-36		5000656	O-ring	1
	C149	13-36		739144	Orifice plug, 0.8mm	1
	C151	13-36		9007315-0510	Screw	4
	C152	13-36		11150082	Solenoid valve adapter	1
	C153	13-36		327007 (9005110-4400)	Plug assembly	1
	C154	13-36		4740154	Seal ring	2
	C155	13-36		1701563	Coil, 24 volt	1
	C200	13-36		4740154	Seal ring	4
	C300	13-36		5000164 (9007315-0507)	Screw	4
	H020	13-36		11062004	Orifice plug, 0.8mm	1
	H020	13-36		11066593	Orifice plug, 1.0mm	1
	QC100	13-36		11150240	Control Kit, electric 24v, NC	1
	QC120	13-36		11103621	Solenoid valve seal kit	1
	QC125	13-36		11104460	Nut	1
	QC150	13-36		11104468	Solenoid valve kit, 24 volt	1

Control

(SA & SB)

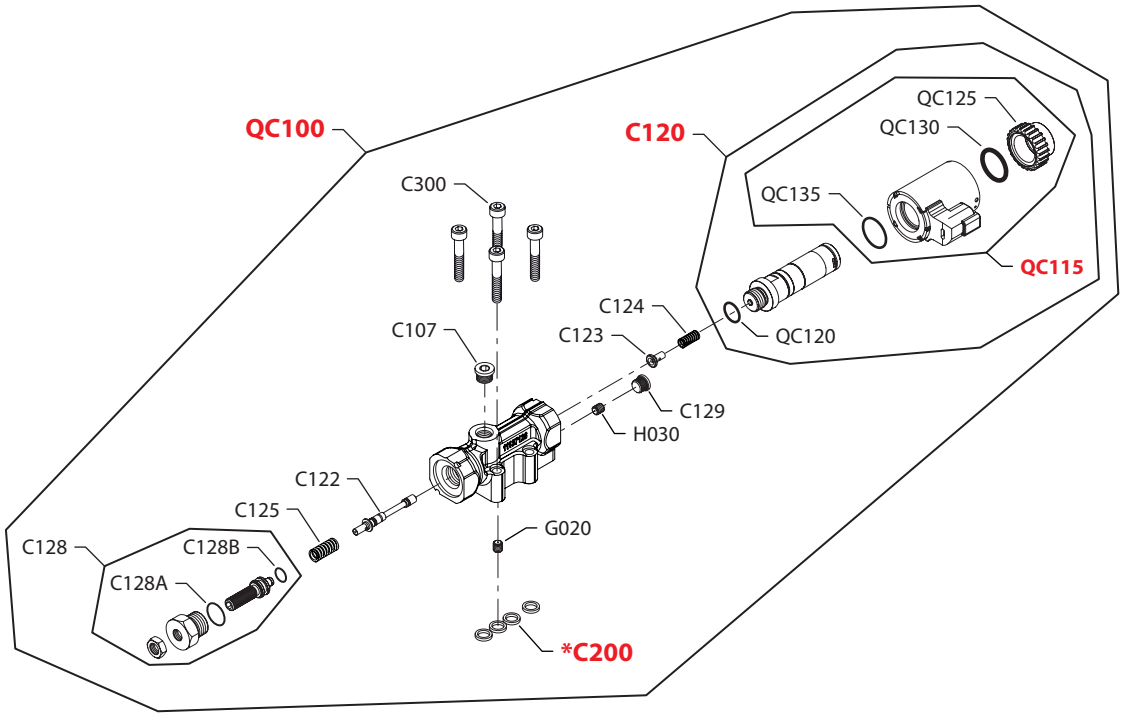

E103 508E

* = included in base motor seal kit Q210

Enlarged **bold** type item numbers are recommended part to stock for servicing.

Control

Fan drive control

Order code	Item	Date begin	Date end	Part number	Part name	Qty. per model/kit
SA	C107	15-48		327007 (9005110-4400)	Plug assembly	1
	C120	15-48		11013613	Solenoid valve, 12 volt	1
	C122	15-48		11168804	Spool	1
	C123	15-48		11168807	Spring guide	1
	C124	15-48		11167423	Spring	1
	C125	15-48		11167424	Spring	1
	C128	15-48		11145569	Pressure adjuster assembly	1
	C128A	15-48		085043 (9004201-3700)	O-ring	1
	C128B	15-48		732479	O-ring	1
	C129	15-48		11040532	Plug assembly	1
	C200	15-48		4740154	Seal ring	4
	C300	15-48		5000164 (9007315-0507)	Screw	4
	G020	15-48		739144	Orifice plug, 0.8mm	1
	G020	15-48		519659	Orifice plug, 1.0mm	1
	G020	15-48		519659	Orifice plug, 1.0mm	1
	H030	15-48		639146	Orifice plug, 1.2mm	1
	QC100	15-48		11168932	Control Kit, FDC, 12 volt, left, LP, NC	1
	QC115	15-48		11031751	Coil kit, 12 volt	1
	QC120	15-48		085043 (9004201-3700)	O-ring	1
	QC125	15-48		11027046	Nut	1
	QC130	15-48		063172	O-ring	1
	QC135	15-48		11031608	O-ring	1
SB	C107	15-48		327007 (9005110-4400)	Plug assembly	1
	C120	15-48		11013614	Solenoid valve, 24 volt	1
	C122	15-48		11168804	Spool	1
	C123	15-48		11168807	Spring guide	1
	C124	15-48		11167423	Spring	1
	C125	15-48		11167424	Spring	1
	C128	15-48		11145569	Pressure adjuster assembly	1
	C128A	15-48		085043 (9004201-3700)	O-ring	1
	C128B	15-48		732479	O-ring	1
	C129	15-48		11040532	Plug assembly	1
	C200	15-48		4740154	Seal ring	4
	C300	15-48		5000164 (9007315-0507)	Screw	4
	G020	15-48		739144	Orifice plug, 0.8mm	1
	G020	15-48		519659	Orifice plug, 1.0mm	1
	G020	15-48		519659	Orifice plug, 1.0mm	1
	H030	15-48		639146	Orifice plug, 1.2mm	1
	QC100	15-48		11168933	Control Kit, FDC, 24 volt, left, LP, NC	1
	QC115	15-48		11031762	Coil kit, 24 volt	1
	QC120	15-48		085043 (9004201-3700)	O-ring	1
	QC125	15-48		11027046	Nut	1
	QC130	15-48		063172	O-ring	1
	QC135	15-48		11031608	O-ring	1

Control

(SC & SD)

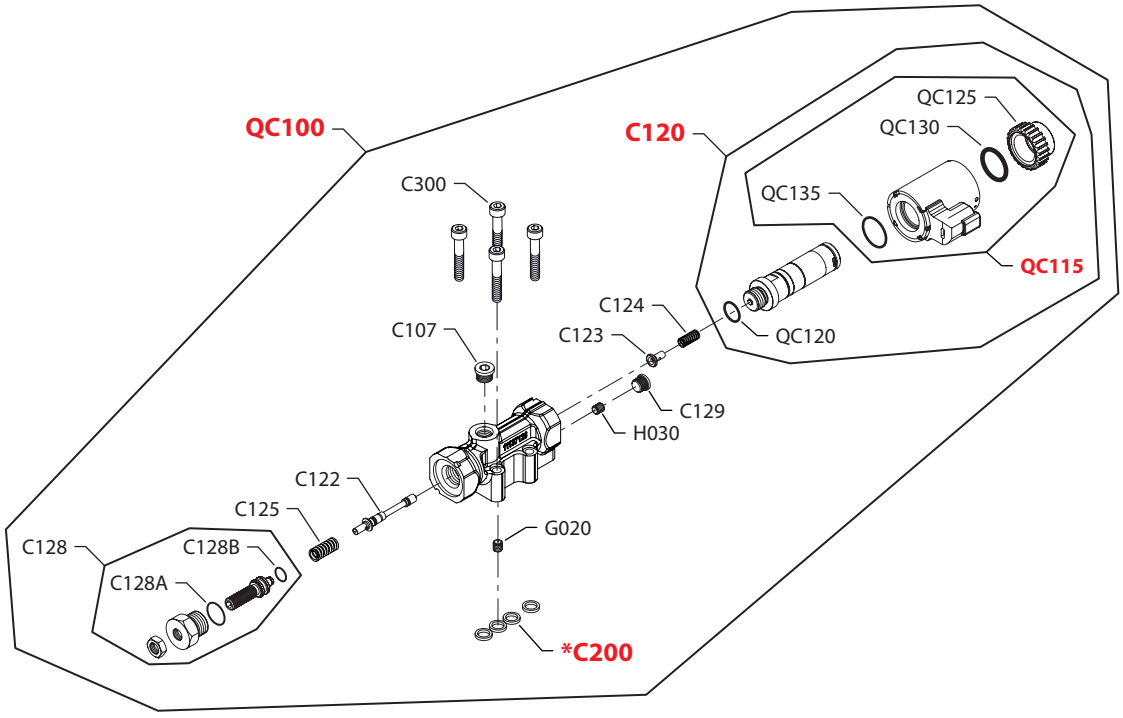

E103 508E

* = included in base motor seal kit Q210

Enlarged **bold** type item numbers are recommended part to stock for servicing.

Control

Fan drive control

Order code	Item	Date begin	Date end	Part number	Part name	Qty. per model/kit
SC	C107	15-48		327007 (9005110-4400)	Plug assembly	1
	C120	15-48		11013613	Solenoid valve, 12 volt	1
	C122	15-48		11168804	Spool	1
	C123	15-48		11168807	Spring guide	1
	C124	15-48		11167423	Spring	1
	C125	15-48		11167425	Spring	1
	C128	15-48		11145569	Pressure adjuster assembly	1
	C128A	15-48		085043 (9004201-3700)	O-ring	1
	C128B	15-48		732479	O-ring	1
	C129	15-48		11040532	Plug assembly	1
	C200	15-48		4740154	Seal ring	4
	C300	15-48		5000164 (9007315-0507)	Screw	4
	G020	15-48		739144	Orifice plug, 0.8mm	1
	G020	15-48		519659	Orifice plug, 1.0mm	1
	H030	15-48		639146	Orifice plug, 1.2mm	1
	QC100	15-48		11168934	Control Kit, FDC, 12 volt, left, HP, NC	1
	QC115	15-48		11031751	Coil kit, 12 volt	1
	QC120	15-48		085043 (9004201-3700)	O-ring	1
	QC125	15-48		11027046	Nut	1
	QC130	15-48		063172	O-ring	1
	QC135	15-48		11031608	O-ring	1
SD	C107	15-48		327007 (9005110-4400)	Plug assembly	1
	C120	15-48		11013614	Solenoid valve, 24 volt	1
	C122	15-48		11168804	Spool	1
	C123	15-48		11168807	Spring guide	1
	C124	15-48		11167423	Spring	1
	C125	15-48		11167424	Spring	1
	C128	15-48		11145569	Pressure adjuster assembly	1
	C128A	15-48		085043 (9004201-3700)	O-ring	1
	C128B	15-48		732479	O-ring	1
	C129	15-48		11040532	Plug assembly	1
	C200	15-48		4740154	Seal ring	4
	C300	15-48		5000164 (9007315-0507)	Screw	4
	G020	15-48		739144	Orifice plug, 0.8mm	1
	G020	15-48		519659	Orifice plug, 1.0mm	1
	H030	15-48		639146	Orifice plug, 1.2mm	1
	QC100	15-48		11168935	Control Kit, FDC, 24 volt, left, HP, NC	1
	QC115	15-48		11031762	Coil kit, 24 volt	1
	QC120	15-48		085043 (9004201-3700)	O-ring	1
	QC125	15-48		11027046	Nut	1
	QC130	15-48		063172	O-ring	1
	QC135	15-48		11031608	O-ring	1

Control

(SE & SF)

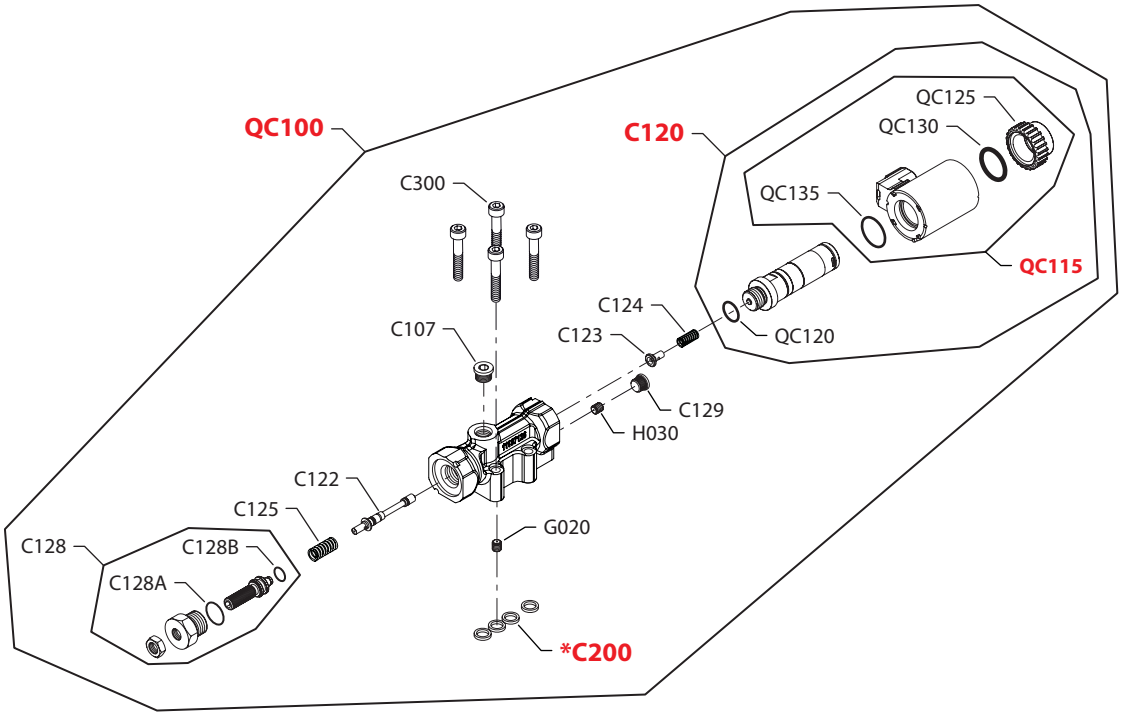

E103 509E

* = included in base motor seal kit Q210

Enlarged **bold** type item numbers are recommended part to stock for servicing.

Control

Fan drive control

Order code	Item	Date begin	Date end	Part number	Part name	Qty. per model/kit
SE	C107	15-48		327007 (9005110-4400)	Plug assembly	1
	C120	15-48		11013613	Solenoid valve, 12 volt	1
	C122	15-48		11168804	Spool	1
	C123	15-48		11168807	Spring guide	1
	C124	15-48		11167423	Spring	1
	C125	15-48		11167424	Spring	1
	C128	15-48		11145569	Pressure adjuster assembly	1
	C128A	15-48		085043 (9004201-3700)	O-ring	1
	C128B	15-48		732479	O-ring	1
	C129	15-48		11040532	Plug assembly	1
	C200	15-48		4740154	Seal ring	4
	C300	15-48		5000164 (9007315-0507)	Screw	4
	G020	15-48		739144	Orifice plug, 0.8mm	1
	G020	15-48		519659	Orifice plug, 1.0mm	1
	H030	15-48		639146	Orifice plug, 1.2mm	1
	QC100	15-48		11168936	Control Kit, FDC, 12 volt, right, LP, NC	1
	QC115	15-48		11031751	Coil kit, 12 volt	1
	QC120	15-48		085043 (9004201-3700)	O-ring	1
	QC125	15-48		11027046	Nut	1
	QC130	15-48		063172	O-ring	1
	QC135	15-48		11031608	O-ring	1
SF	C107	15-48		327007 (9005110-4400)	Plug assembly	1
	C120	15-48		11013614	Solenoid valve, 24 volt	1
	C122	15-48		11168804	Spool	1
	C123	15-48		11168807	Spring guide	1
	C124	15-48		11167423	Spring	1
	C125	15-48		11167424	Spring	1
	C128	15-48		11145569	Pressure adjuster assembly	1
	C128A	15-48		085043 (9004201-3700)	O-ring	1
	C128B	15-48		732479	O-ring	1
	C129	15-48		11040532	Plug assembly	1
	C200	15-48		4740154	Seal ring	4
	C300	15-48		5000164 (9007315-0507)	Screw	4
	G020	15-48		739144	Orifice plug, 0.8mm	1
	G020	15-48		519659	Orifice plug, 1.0mm	1
	H030	15-48		639146	Orifice plug, 1.2mm	1
	QC100	15-48		11168937	Control Kit, FDC, 24 volt, right, LP, NC	1
	QC115	15-48		11031762	Coil kit, 24 volt	1
	QC120	15-48		085043 (9004201-3700)	O-ring	1
	QC125	15-48		11027046	Nut	1
	QC130	15-48		063172	O-ring	1
	QC135	15-48		11031608	O-ring	1

Control

(SG & SH)

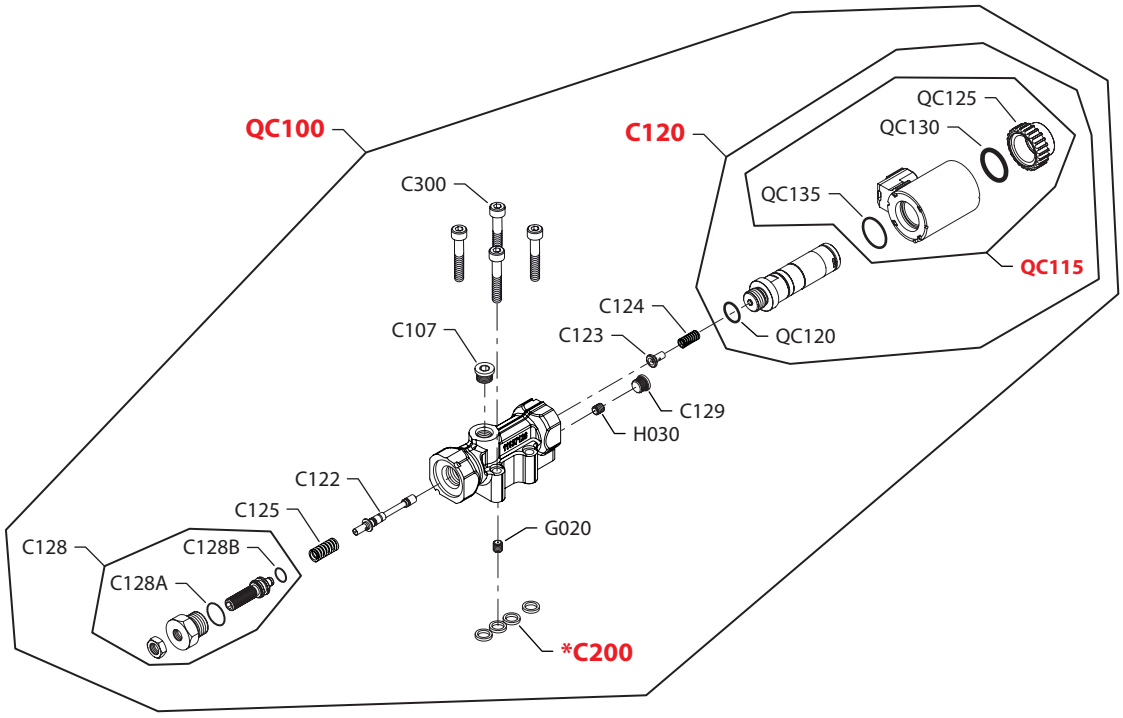

E103 509E

* = included in base motor seal kit Q210

Enlarged **bold** type item numbers are recommended part to stock for servicing.

Control

Fan drive control

Order code	Item	Date begin	Date end	Part number	Part name	Qty. per model/kit
SG	C107	15-48		327007 (9005110-4400)	Plug assembly	1
	C120	15-48		11013613	Solenoid valve, 12 volt	1
	C122	15-48		11168804	Spool	1
	C123	15-48		11168807	Spring guide	1
	C124	15-48		11167423	Spring	1
	C125	15-48		11167425	Spring	1
	C128	15-48		11145569	Pressure adjuster assembly	1
	C128A	15-48		085043 (9004201-3700)	O-ring	1
	C128B	15-48		732479	O-ring	1
	C129	15-48		11040532	Plug assembly	1
	C200	15-48		4740154	Seal ring	4
	C300	15-48		5000164 (9007315-0507)	Screw	4
	G020	15-48		739144	Orifice plug, 0.8mm	1
	G020	15-48		519659	Orifice plug, 1.0mm	1
	H030	15-48		639146	Orifice plug, 1.2mm	1
	QC100	15-48		11168938	Control Kit, FDC, 12 volt, right, HP, NC	1
	QC115	15-48		11031751	Coil kit, 12 volt	1
	QC120	15-48		085043 (9004201-3700)	O-ring	1
	QC125	15-48		11027046	Nut	1
	QC130	15-48		063172	O-ring	1
	QC135	15-48		11031608	O-ring	1
SH	C107	15-48		327007 (9005110-4400)	Plug assembly	1
	C120	15-48		11013614	Solenoid valve, 24 volt	1
	C122	15-48		11168804	Spool	1
	C123	15-48		11168807	Spring guide	1
	C124	15-48		11167423	Spring	1
	C125	15-48		11167424	Spring	1
	C128	15-48		11145569	Pressure adjuster assembly	1
	C128A	15-48		085043 (9004201-3700)	O-ring	1
	C128B	15-48		732479	O-ring	1
	C129	15-48		11040532	Plug assembly	1
	C200	15-48		4740154	Seal ring	4
	C300	15-48		5000164 (9007315-0507)	Screw	4
	G020	15-48		739144	Orifice plug, 0.8mm	1
	G020	15-48		519659	Orifice plug, 1.0mm	1
	H030	15-48		639146	Orifice plug, 1.2mm	1
	QC100	15-48		11168940	Control Kit, FDC, 24 volt, right, HP, NC	1
	QC115	15-48		11031762	Coil kit, 24 volt	1
	QC120	15-48		085043 (9004201-3700)	O-ring	1
	QC125	15-48		11027046	Nut	1
	QC130	15-48		063172	O-ring	1
	QC135	15-48		11031608	O-ring	1

Control orifice

Proir to 12-40 (10/1/2012)

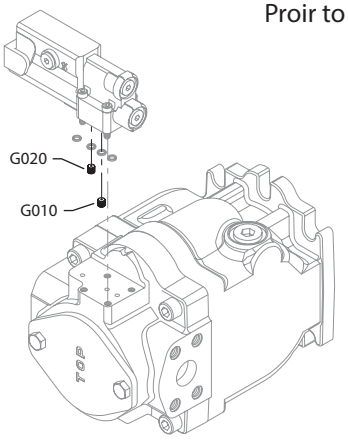

(E, F & G)

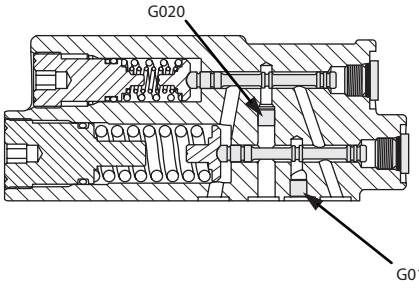

(A, B & C)

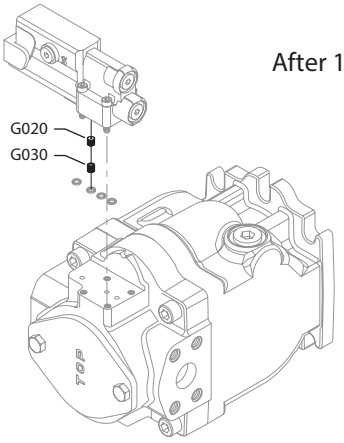

(A, B, C, E, F & G)

After 12-39 (10/1/2012)

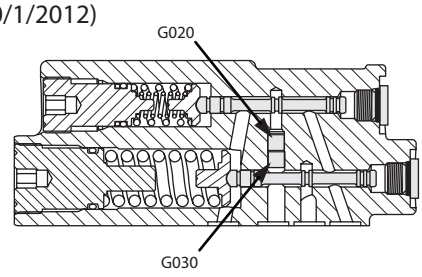

(R & S)

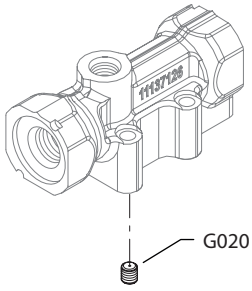

(C & D)

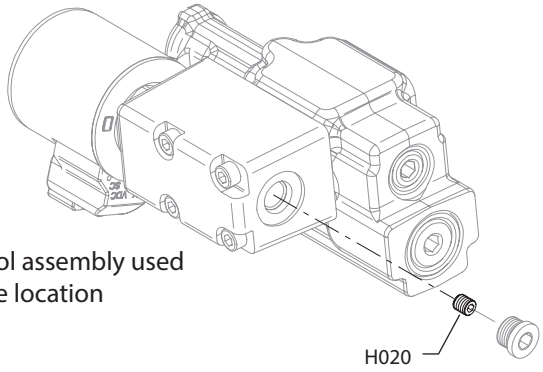

Generic control assembly used to show orifice location

(E)

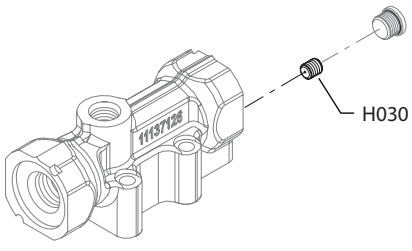

E101 625E

Control orifice

Choke orifice (servo control orifice)

Order code	Item	Date begin	Date end	Part number	Part name	Qty. per model/kit
A	G010	03-23	12-39	739144	Orifice plug, 0.8 mm (SB-2012-011)	1
	G020	12-40		739144	Orifice plug. 0.8 mm	1
	G030	12-40		518215	Orifice plug, 2.2 mm	1
B	G010	03-23	12-39	519659	Orifice plug, 1.0 mm (SB-2012-011)	1
	G020	12-40		519659	Orifice plug, 1.0 mm	1
	G030	12-40		518215	Orifice plug, 2.2 mm	1
C	G010	03-23	12-39	763680	Orifice plug, 0.6 mm (SB-2012-011)	1
	G020	12-40		763680	Orifice plug, 0.6 mm	1
	G030	12-40		518215	Orifice plug, 2.2 mm	1
E	G020	07-03		739144	Orifice plug, 0.8 mm (SB-2012-011)	1
	G030	12-40		518215	Orifice plug, 2.2 mm	1
F	G020	07-03		519659	Orifice plug, 1.0 mm (SB-2012-011)	1
	G030	12-40		518215	Orifice plug, 2.2 mm	1
G	G020	07-03		763680	Orifice plug, 0.6 mm (SB-2012-011)	1
	G030	12-40		518215	Orifice plug, 2.2 mm	1
N				None		
R	G020	15-47		739144	Orifice plug, 0.8 mm	1
S	G020	15-47		519659	Orifice plug, 1.0 mm	1

Gain orifice

C	H020	14-35		11062004	Orifice plug, 0.8mm	1
D	H020	14-35		11066593	Orifice plug, 1.0mm	1
E	H020	15-47		639146	Orifice plug, 1.2mm	1
N				None		

Shaft, auxiliary flange and end cap

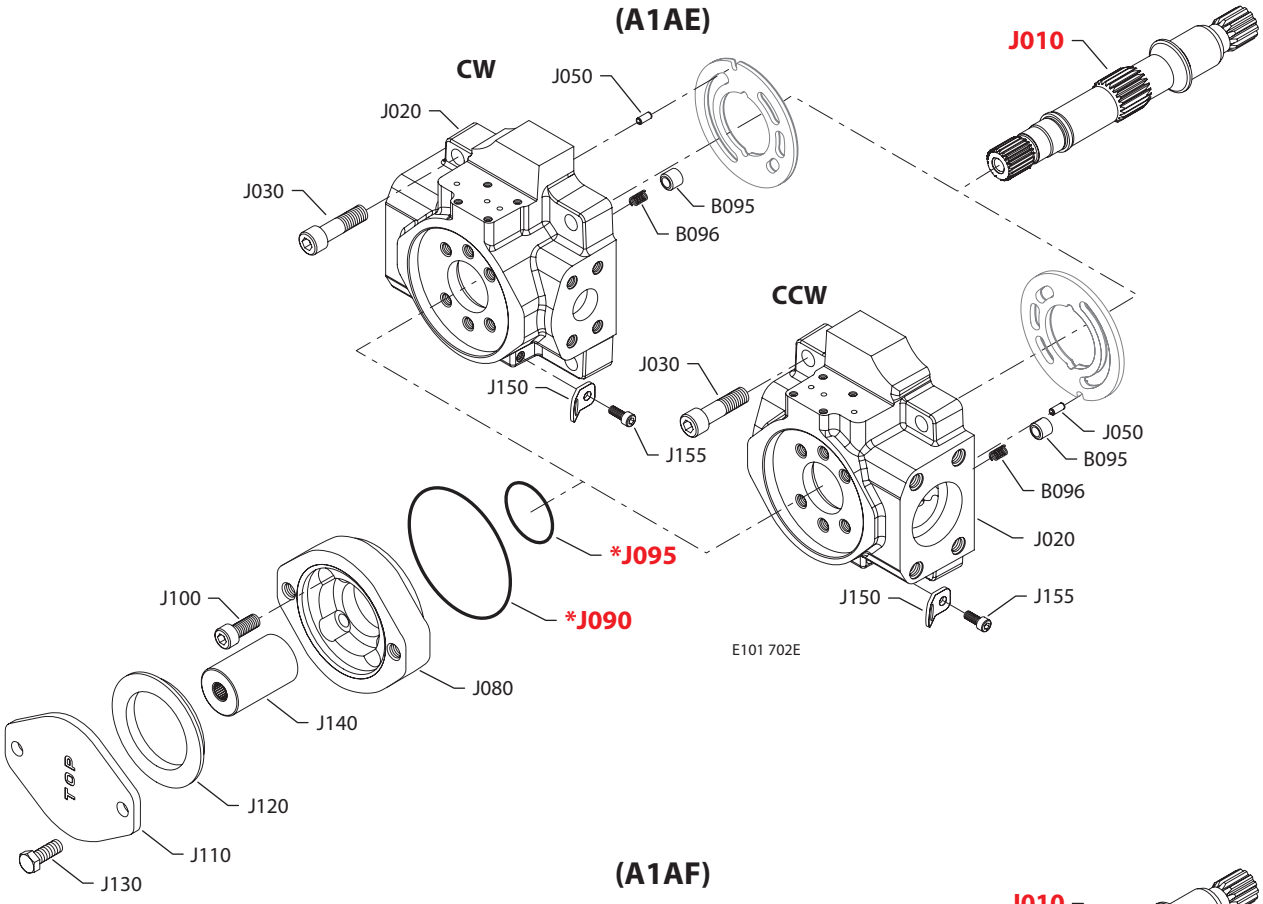

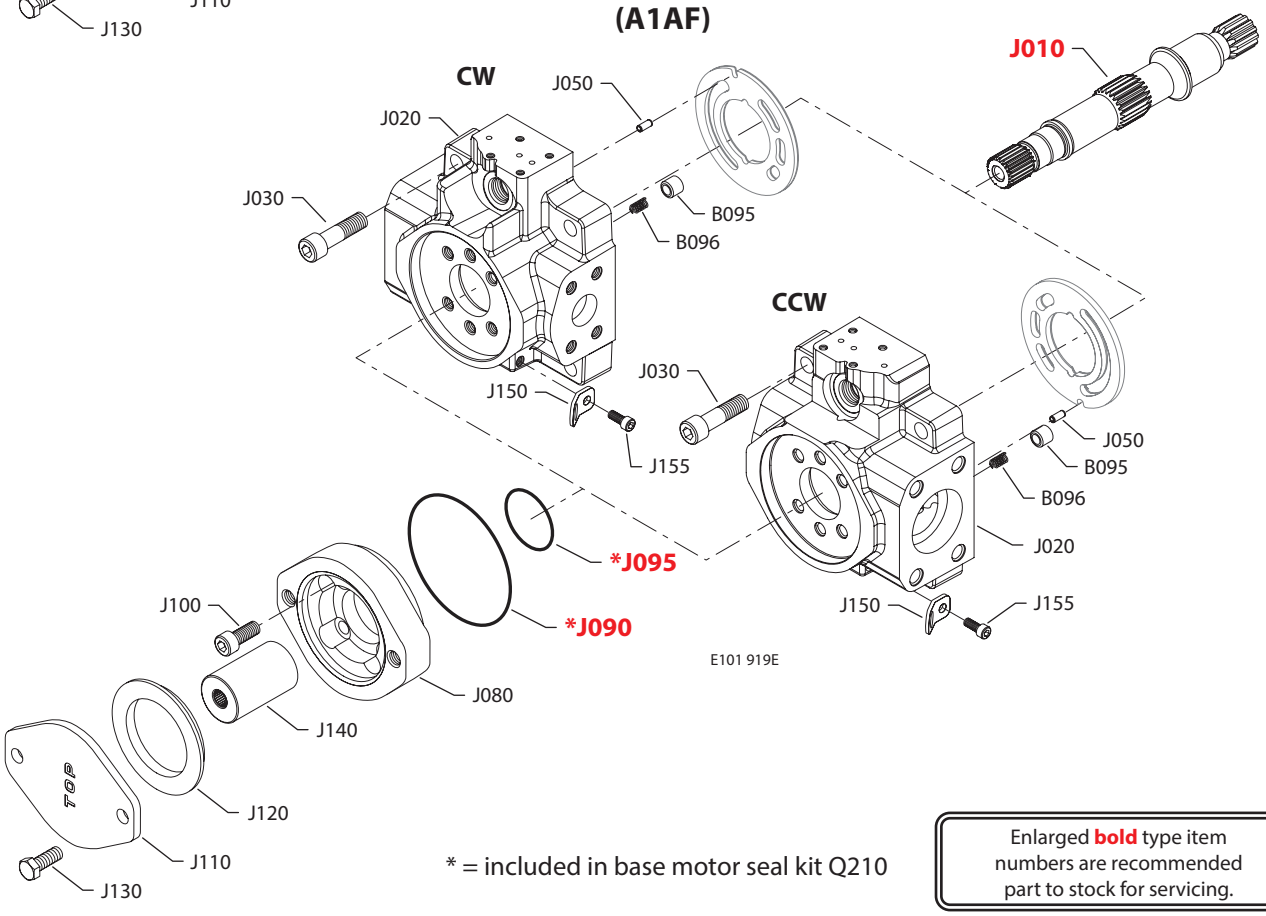

* = included in base motor seal kit Q210

Enlarged **bold** type item numbers are recommended part to stock for servicing.

Shaft, auxiliary flange and end cap

Shaft/auxiliary flange/end cap

Order code	Item	Date begin	Date end	Part number	Part name	Qty. per model/kit
A1AE	B095	13-28		1700256	Check valve poppet	1
	B096	13-28		1700257	Check valve spring	1
	J010	13-28		11127546	Shaft, 14 tooth w/auxiliary drive, extended	1
	J020	13-28		11092368	End cap, CW, radial ports, gen. 2, JRR	1
	J020	13-28		11086934	End cap, CCW, radial ports, gen. 2, JRL	1
	J030	13-28		5000181 (9007314-1210)	Screw	4
	J050	13-28		9004700-1907	Pin	1
	J080	13-28		4570289	Flange adapter, A pad	1
	J090	13-28		5000099 (9004100-1550)	O-ring	1
	J095	13-28		545434 (9004100-0420)	O-ring	1
	J100	13-28		5000489	Screw	4
	J110	13-28		4460586	Cover plate	1
	J120	13-28		4800482	A pad seal	1
	J130	13-28		9007200-3712	Screw	2
	J140	13-28		1701185	Coupling, 9 tooth	1
	J150	13-28		4800754	Lifting bracket	1
	J155	13-28		9007315-0604	Screw	1
A1AF	B095	13-28		1700256	Check valve poppet	1
	B096	13-28		1700257	Check valve spring	1
	J010	13-28		11127546	Shaft, 14 tooth w/auxiliary drive, extended	1
	J020	13-28		11095327	End cap, CW, radial ports, DL, gen. 2, JRR	1
	J020	13-28		11086919	End cap, CCW, radial ports, DL, gen. 2, JRL	1
	J030	13-28		5000181 (9007314-1210)	Screw	4
	J050	13-28		9004700-1907	Pin	1
	J080	13-28		4570289	Flange adapter, A pad	1
	J090	13-28		5000099 (9004100-1550)	O-ring	1
	J095	13-28		545434 (9004100-0420)	O-ring	1
	J100	13-28		5000489	Screw	4
	J110	13-28		4460586	Cover plate	1
	J120	13-28		4800482	A pad seal	1
	J130	13-28		9007200-3712	Screw	2
	J140	13-28		1701185	Coupling, 9 tooth	1
	J150	13-28		4800754	Lifting bracket	1
	J155	13-28		9007315-0604	Screw	1

Shaft, auxiliary flange and end cap

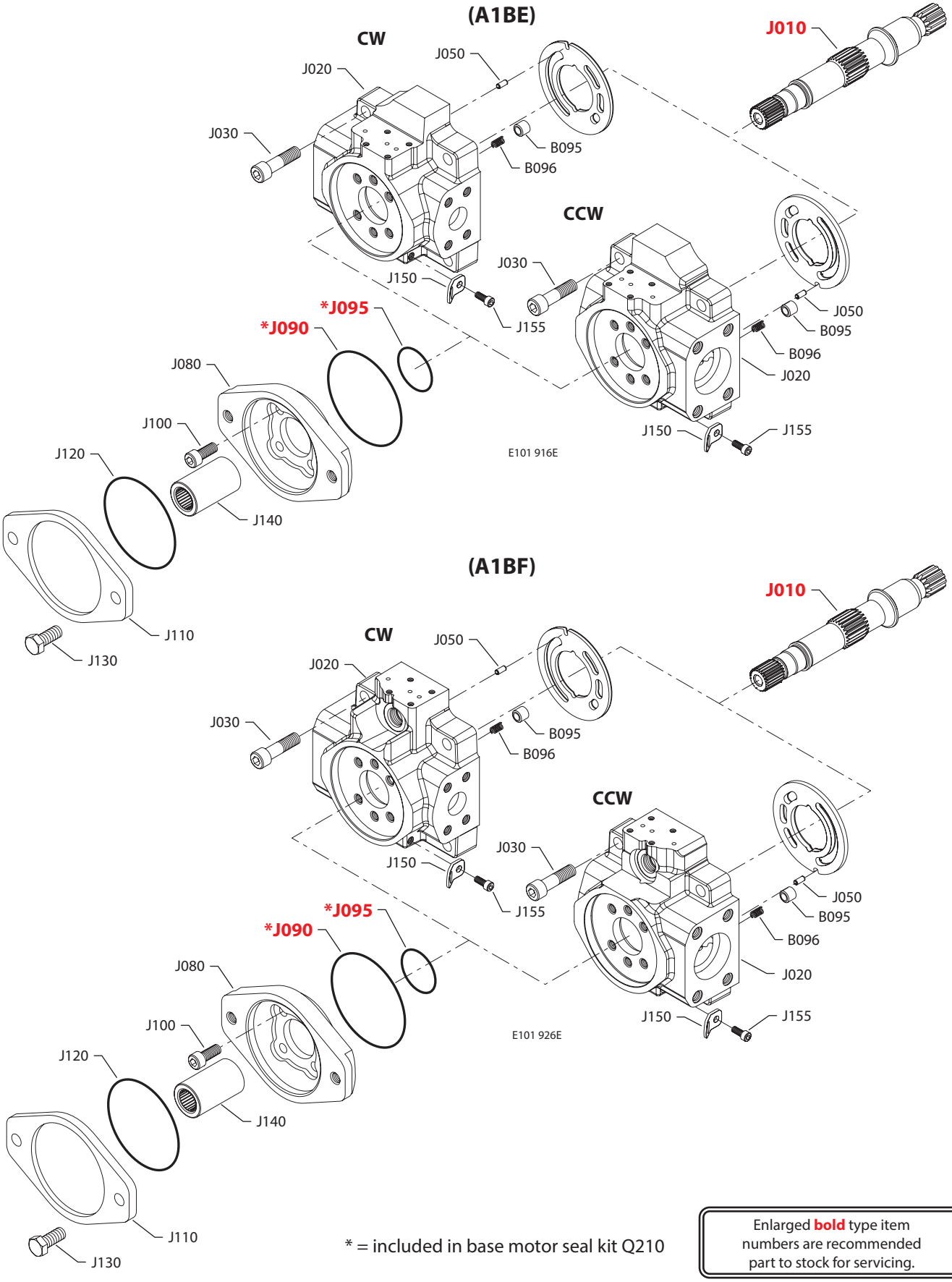

* = included in base motor seal kit Q210

Enlarged **bold** type item numbers are recommended part to stock for servicing.

Shaft, auxiliary flange and end cap

Shaft/auxiliary flange/end cap

Order code	Item	Date begin	Date end	Part number	Part name	Qty. per model/kit
A1BE	B095	13-28		1700256	Check valve poppet	1
	B096	13-28		1700257	Check valve spring	1
	J010	13-28		11127546	Shaft, 14 tooth w/auxiliary drive, extended	1
	J020	13-28		11092368	End cap, CW, radial ports, gen. 2, JRR	1
	J020	13-28		11086934	End cap, CCW, radial ports, gen. 2, JRL	1
	J030	13-28		5000181 (9007314-1210)	Screw	4
	J050	13-28		9004700-1907	Pin	1
	J080	13-28		4570210	Flange adapter, B pad	1
	J090	13-28		5000099 (9004100-1550)	O-ring	1
	J095	13-28		545434 (9004100-0420)	O-ring	1
	J100	13-28		5000489	Screw	4
	J110	13-28		4460370	Cover plate	1
	J120	13-28		9004104-0440	O-ring	1
	J130	13-28		9007200-5021	Screw	2
	J140	13-28		1701187	Coupling, 13 tooth	1
	J150	13-28		4800754	Lifting bracket	1
	J155	13-28		9007315-0604	Screw	1
A1BF	B095	13-28		1700256	Check valve poppet	1
	B096	13-28		1700257	Check valve spring	1
	J010	13-28		11127546	Shaft, 14 tooth w/auxiliary drive, extended	1
	J020	13-28		11095327	End cap, CW, radial ports, DL, gen. 2, JRR	1
	J020	13-28		11086919	End cap, CCW, radial ports, DL, gen. 2, JRL	1
	J030	13-28		5000181 (9007314-1210)	Screw	4
	J050	13-28		9004700-1907	Pin	1
	J080	13-28		4570210	Flange adapter, B pad	1
	J090	13-28		5000099 (9004100-1550)	O-ring	1
	J095	13-28		545434 (9004100-0420)	O-ring	1
	J100	13-28		5000489	Screw	4
	J110	13-28		4460370	Cover plate	1
	J120	13-28		9004104-0440	O-ring	1
	J130	13-28		9007200-5021	Screw	2
	J140	13-28		1701187	Coupling, 13 tooth	1
	J150	13-28		4800754	Lifting bracket	1
	J155	13-28		9007315-0604	Screw	1

Shaft, auxiliary flange and end cap

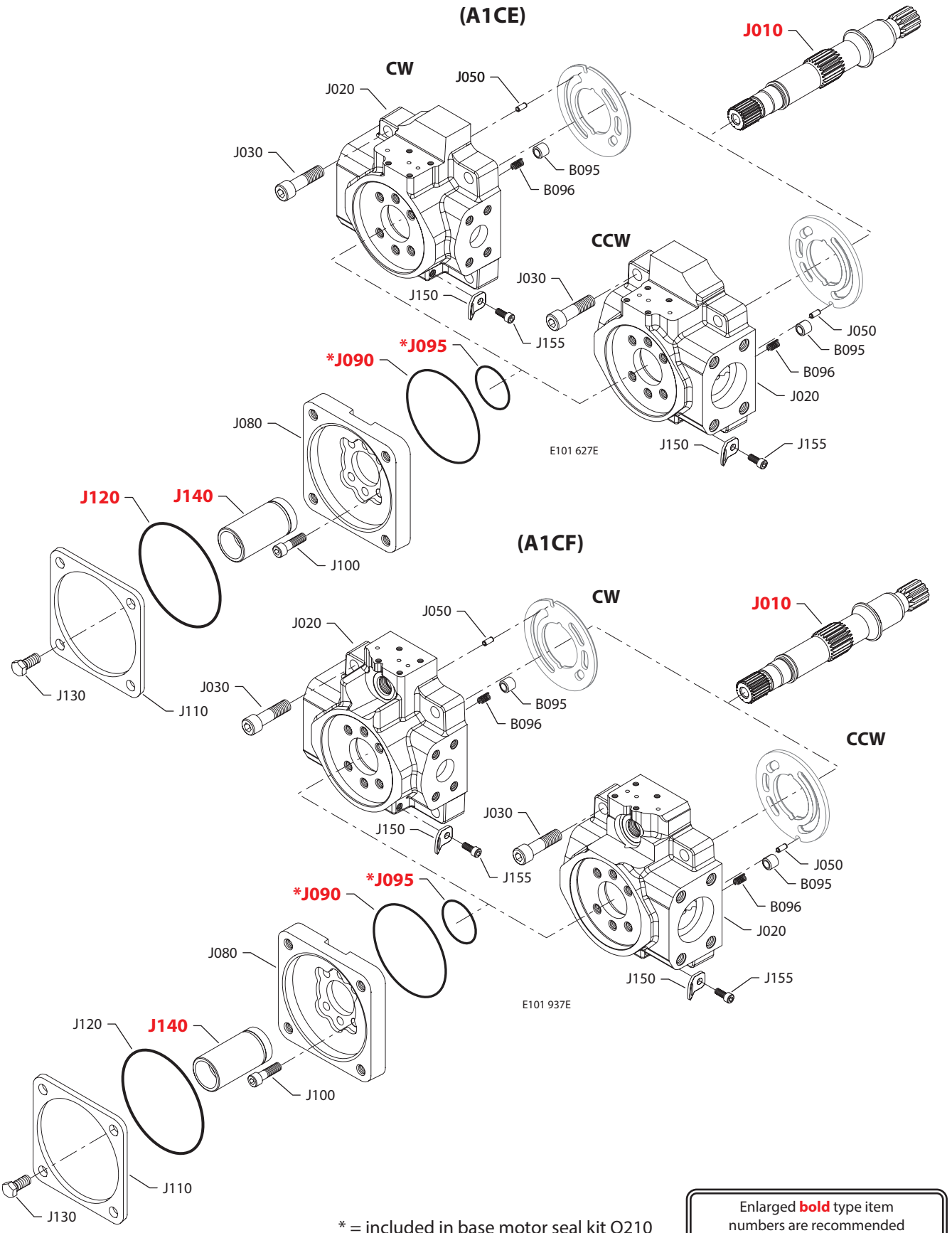

* = included in base motor seal kit Q210

Enlarged **bold** type item numbers are recommended part to stock for servicing.

Shaft, auxiliary flange and end cap

Shaft/auxiliary flange/end cap

Order code	Item	Date begin	Date end	Part number	Part name	Qty. per model/kit
A1CE	B095	13-28		1700256	Check valve poppet	1
	B096	13-28		1700257	Check valve spring	1
	J010	13-28		11127546	Shaft, 14 tooth w/auxiliary drive, extended	1
	J020	13-28		11092368	End cap, CW, radial ports, gen. 2, JRR	1
	J020	13-28		11086934	End cap, CCW, radial ports, gen. 2, JRL	1
	J030	13-28		5000181 (9007314-1210)	Screw	4
	J050	13-28		9004700-1907	Pin	1
	J080	13-28		11039356	Flange adapter, C pad	1
	J090	13-28		5000099 (9004100-1550)	O-ring	1
	J095	13-28		545434 (9004100-0420)	O-ring	1
	J100	13-28		5000489	Screw	6
	J110	13-28		8800406	Cover plate	1
	J120	13-28		9004100-0480	O-ring	1
	J130	13-28		9007200-5021	Screw	4
	J140	13-28		4570133	Coupling, 14 tooth	1
	J150	13-28		4800754	Lifting bracket	1
	J155	13-28		9007315-0604	Screw	1
A1CF	B095	13-28		1700256	Check valve poppet	1
	B096	13-28		1700257	Check valve spring	1
	J010	13-28		11127546	Shaft, 14 tooth w/auxiliary drive, extended	1
	J020	13-28		11095327	End cap, CW, radial ports, DL, gen. 2, JRR	1
	J020	13-28		11086919	End cap, CCW, radial ports, DL, gen. 2, JRL	1
	J030	13-28		5000181 (9007314-1210)	Screw	4
	J050	13-28		9004700-1907	Pin	1
	J080	13-28		11039356	Flange adapter, C pad	1
	J090	13-28		5000099 (9004100-1550)	O-ring	1
	J095	13-28		545434 (9004100-0420)	O-ring	1
	J100	13-28		5000489	Screw	4
	J110	13-28		8800406	Cover plate	1
	J120	13-28		9004104-0480	O-ring	1
	J130	13-28		9007200-5021	Screw	2
	J140	13-28		4570133	Coupling, 14 tooth	1
	J150	13-28		4800754	Lifting bracket	1
	J155	13-28		9007315-0604	Screw	1

Shaft, auxiliary flange and end cap

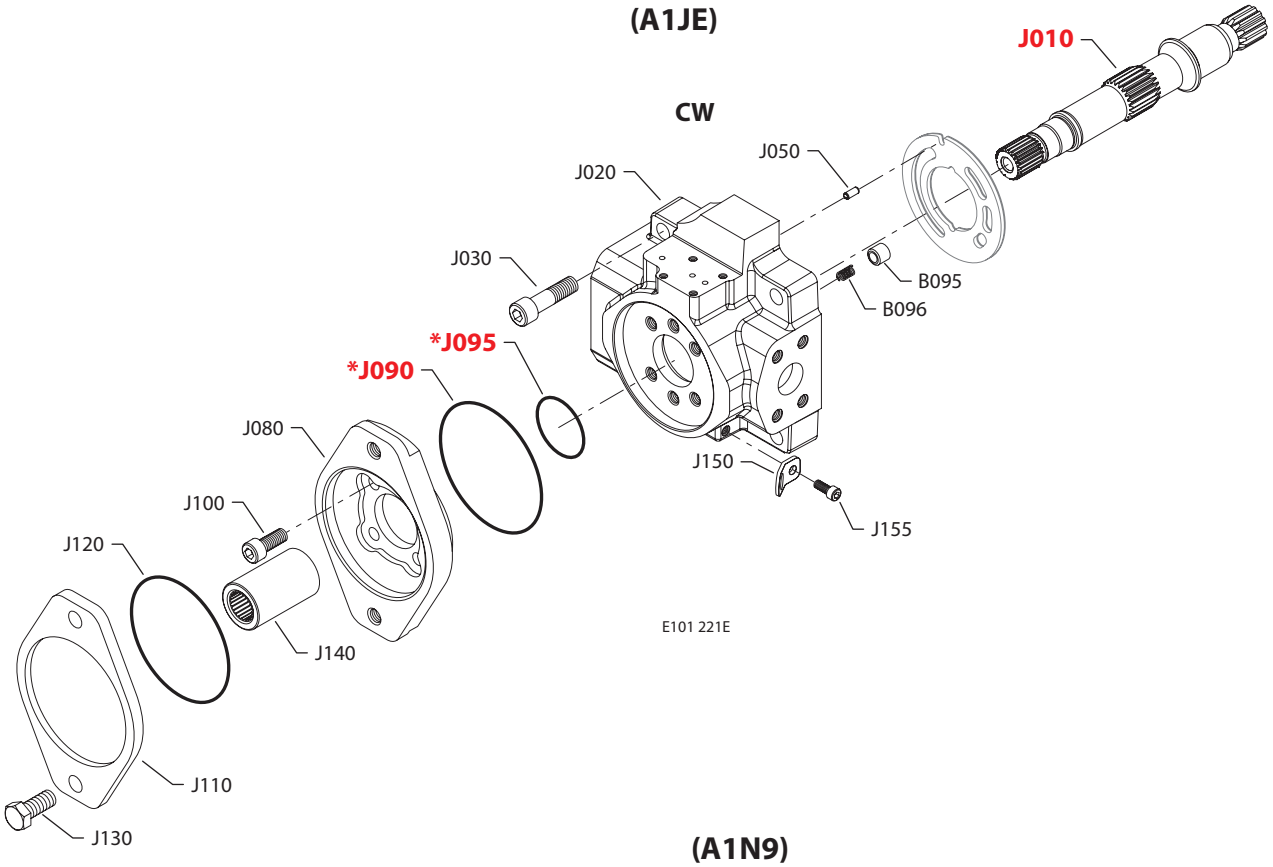

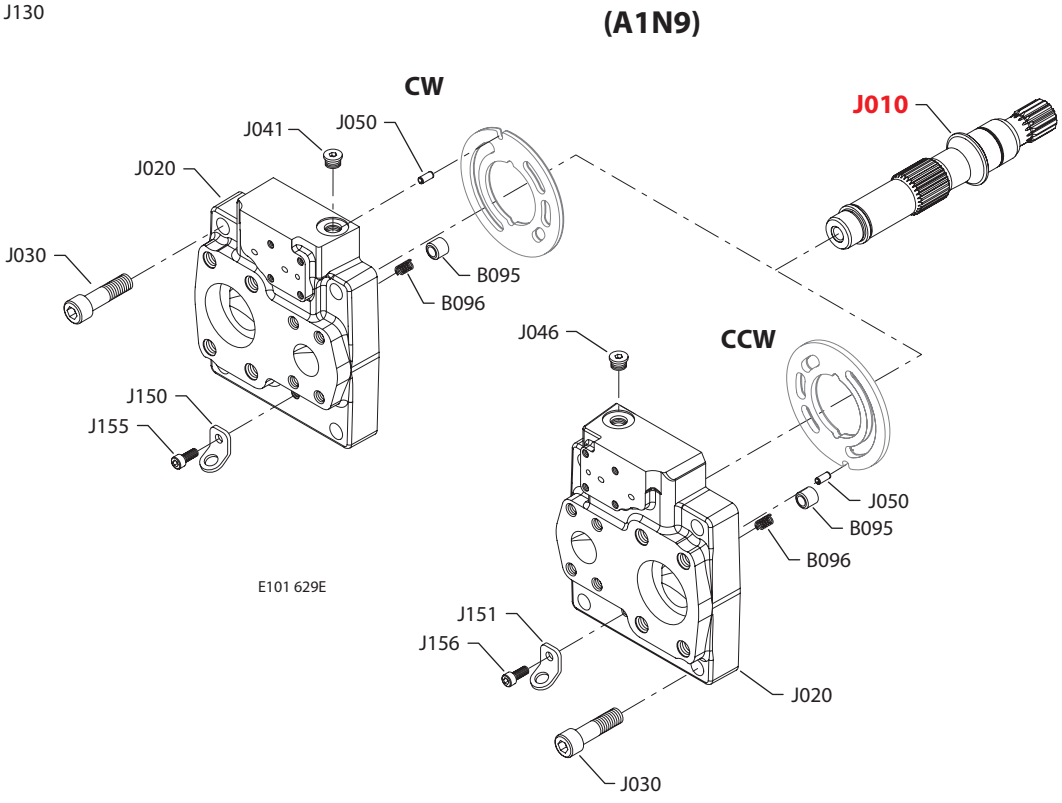

* = included in base motor seal kit Q210

Enlarged **bold** type item numbers are recommended part to stock for servicing.

Shaft, auxiliary flange and end cap

Shaft/auxiliary flange/end cap

Order code	Item	Date begin	Date end	Part number	Part name	Qty. per model/kit
A1JE	B095	13-28		1700256	Check valve poppet	1
	B096	13-28		1700257	Check valve spring	1
	J010	13-28		11127546	Shaft, 14 tooth w/auxiliary drive, extended	1
	J020	13-28		11092368	End cap, CW, radial ports, gen. 2, JRR	1
	J030	13-28		5000181 (9007314-1210)	Screw	4
	J050	13-28		9004700-1907	Pin	1
	J080	13-28		4570210	Flange adapter, B pad	1
	J090	13-28		5000099 (9004100-1550)	O-ring	1
	J095	13-28		545434 (9004100-0420)	O-ring	1
	J100	13-28		5000489	Screw	6
	J110	13-28		4460370	Cover plate	1
	J120	13-28		9004104-0440	O-ring	1
	J130	13-28		9007200-5021	Screw	4
	J140	13-28		1701187	Coupling, 14 tooth	1
	J150	13-28		4800754	Lifting bracket	1
	J155	13-28		9007315-0604	Screw	1
A1N9	B095	13-28		1700256	Check valve poppet	1
	B096	13-28		1700257	Check valve spring	1
	J010	13-28		11127544	Shaft, 14 tooth, without auxiliary drive, extended	1
	J020	13-28		11095294	End cap, CW, axial ports, gen. 2, JRR	1
	J020	13-28		11095297	End cap, CCW, axial ports, gen. 2, JRL	1
	J030	13-28		5000181 (9007314-1210)	Screw	4
	J041	13-28		140644 (9005110-5600)	Plug assembly, JRR	1
	J046	13-28		140644 (9005110-5600)	Plug assembly, JRL	1
	J050	13-28		9004700-1907	Pin	1
	J150	13-28		4800754	Lifting bracket, JRR	1
	J151	13-28		4800754	Lifting bracket, JRL	1
	J155	13-28		9007315-0604	Screw, JRR	1
	J156	13-28		9007315-0604	Screw, JRL	1

Shaft, auxiliary flange and end cap

(A1NE)

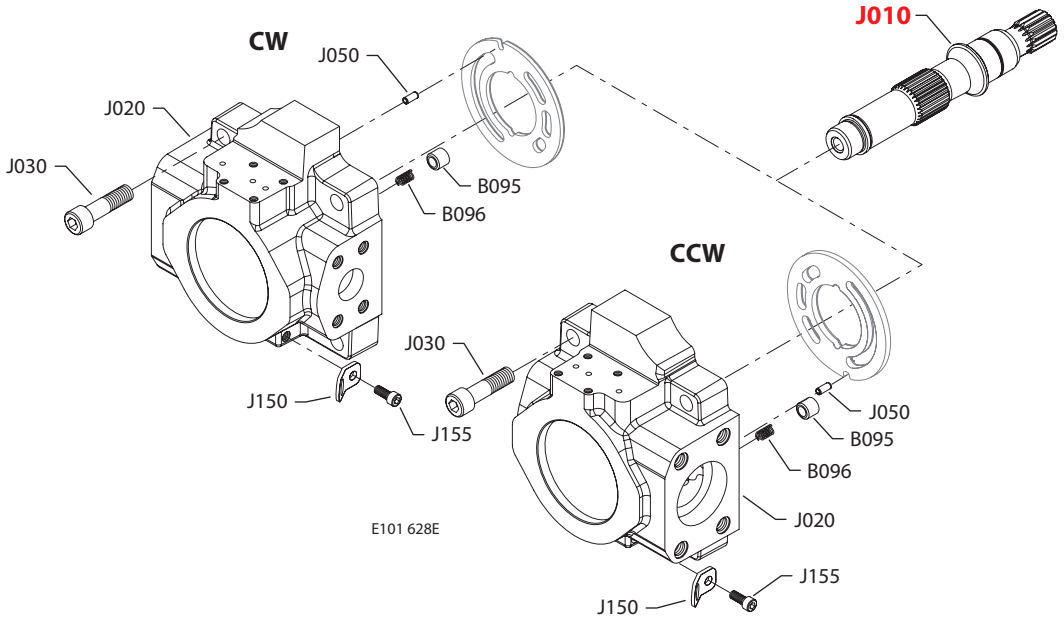

(A1NV)

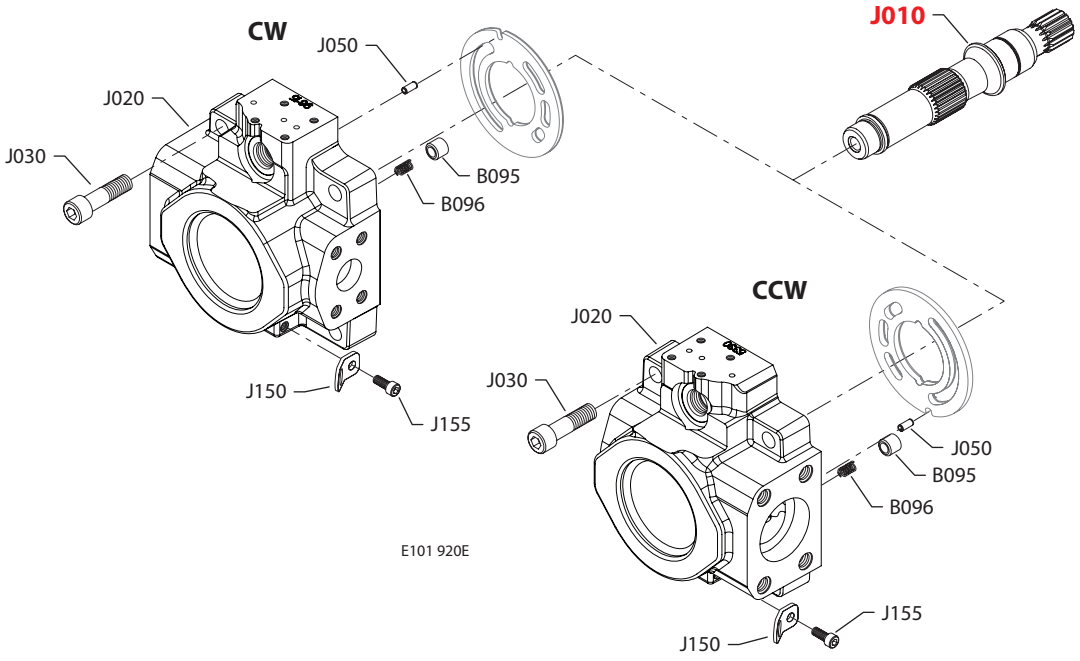

* = included in base motor seal kit Q210

Enlarged **bold** type item numbers are recommended part to stock for servicing.

Shaft, auxiliary flange and end cap

Shaft/auxiliary flange/end cap

Order code	Item	Date begin	Date end	Part number	Part name	Qty. per model/kit
A1NE	B095	13-28		1700256	Check valve poppet	1
	B096	13-28		1700257	Check valve spring	1
	J010	13-28		11127544	Shaft, 14 tooth, without auxiliary drive, extended	1
	J020	13-28		11095323	End cap, CW, radial ports, gen. 2, JRR	1
	J020	13-28		11082641	End cap, CCW, radial ports, gen. 2, JRL	1
	J030	13-28		5000181 (9007314-1210)	Screw	4
	J050	13-28		9004700-1907	Pin	1
	J150	13-28		4800754	Lifting bracket	1
	J155	13-28		9007315-0604	Screw	1
A1NV	B095	13-28		1700256	Check valve poppet	1
	B096	13-28		1700257	Check valve spring	1
	J010	13-28		11127544	Shaft, 14 tooth, without auxiliary drive, extended	1
	J020	13-28		11099615	End cap, CW, axial ports, gen. 2, JRR	1
	J020	13-28		11095330	End cap, CCW, axial ports, gen. 2, JRL	1
	J030	13-28		5000181 (9007314-1210)	Screw	4
	J050	13-28		9004700-1907	Pin	1
	J150	13-28		4800754	Lifting bracket	1
	J155	13-28		9007315-0604	Screw	1

Shaft, auxiliary flange and end cap

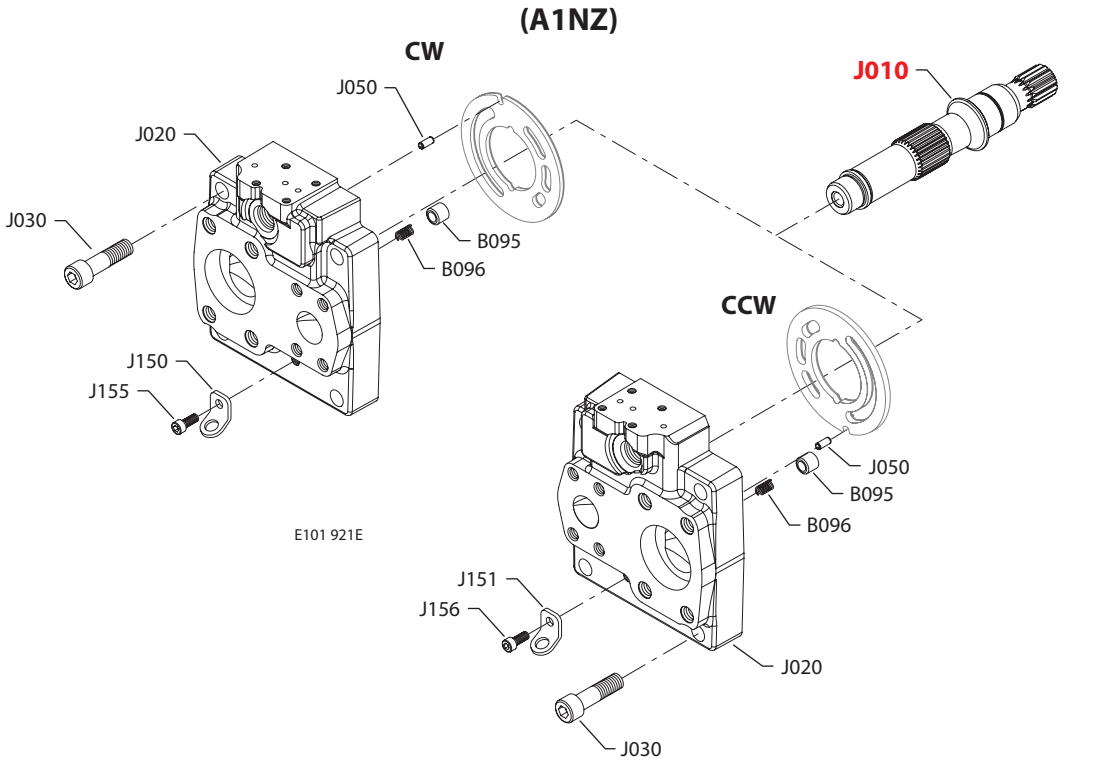

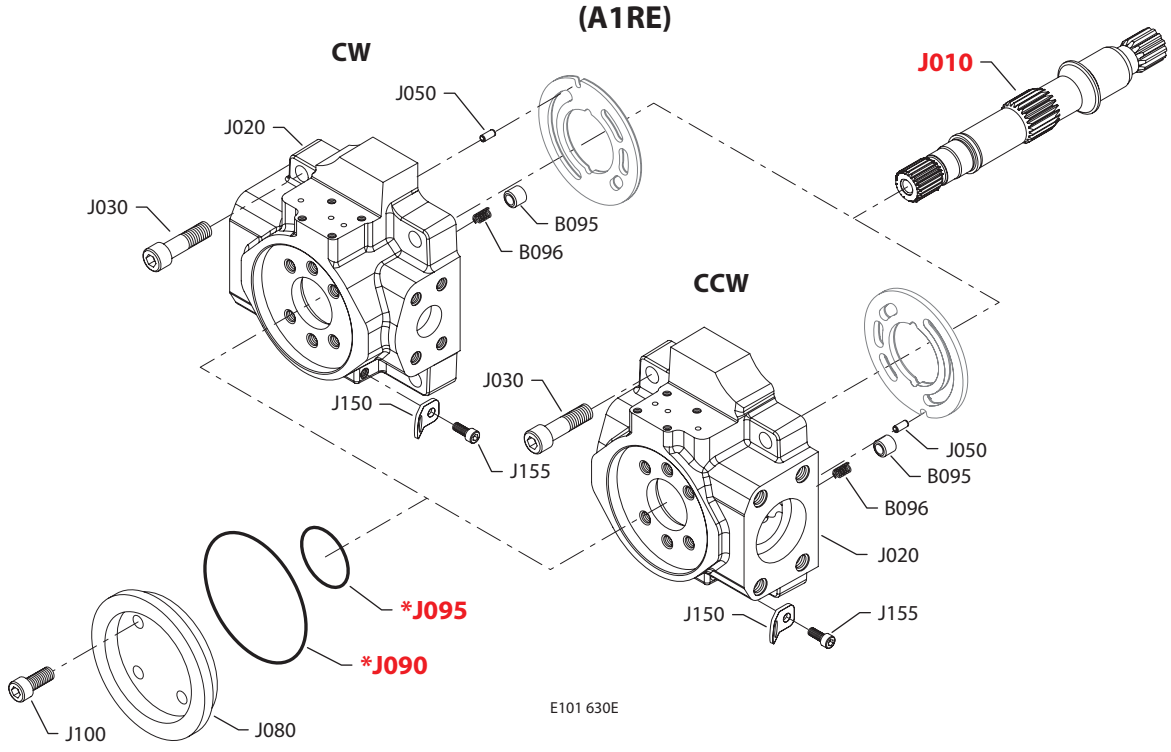

* = included in base motor seal kit Q210

Enlarged **bold** type item numbers are recommended part to stock for servicing.

Shaft, auxiliary flange and end cap

Shaft/auxiliary flange/end cap

Order code	Item	Date begin	Date end	Part number	Part name	Qty. per model/kit
A1NZ	B095	13-28		1700256	Check valve poppet	1
	B096	13-28		1700257	Check valve spring	1
	J010	13-28		11127544	Shaft, 14 tooth, without auxiliary drive, extended	1
	J020	13-28		11095296	End cap, CW, radial ports, DL, gen. 2, JRR	1
	J020	13-28		11095299	End cap, CCW, radial ports, DL, gen. 2, JRL	1
	J030	13-28		5000181 (9007314-1210)	Screw	4
	J050	13-28		9004700-1907	Pin	1
	J150	13-28		4800754	Lifting bracket, JRR	1
	J151	13-28		4800754	Lifting bracket, JRL	1
	J155	13-28		9007315-0604	Screw, JRR	1
	J156	13-28		9007315-0604	Screw, JRL	1
A1RE	B095	13-28		1700256	Check valve poppet	1
	B096	13-28		1700257	Check valve spring	1
	J010	13-28		11127546	Shaft, 14 tooth w/auxiliary drive, extended	1
	J020	13-28		11092368	End cap, CW, radial ports, gen. 2, JRR	1
	J020	13-28		11086934	End cap, CCW, radial ports, gen. 2, JRRL	1
	J030	13-28		5000181 (9007314-1210)	Screw	4
	J050	13-28		9004700-1907	Pin	1
	J080	13-28		4570179	Running cover	1
	J090	13-28		5000099 (9004100-1550)	O-ring	1
	J095	13-28		545434 (9004104-0310)	O-ring	1
	J100	13-28		5000489	Screw	4
	J150	13-28		4800754	Lifting bracket	1
	J155	13-28		9007315-0604	Screw	1

Shaft, auxiliary flange and end cap

(A1RF)

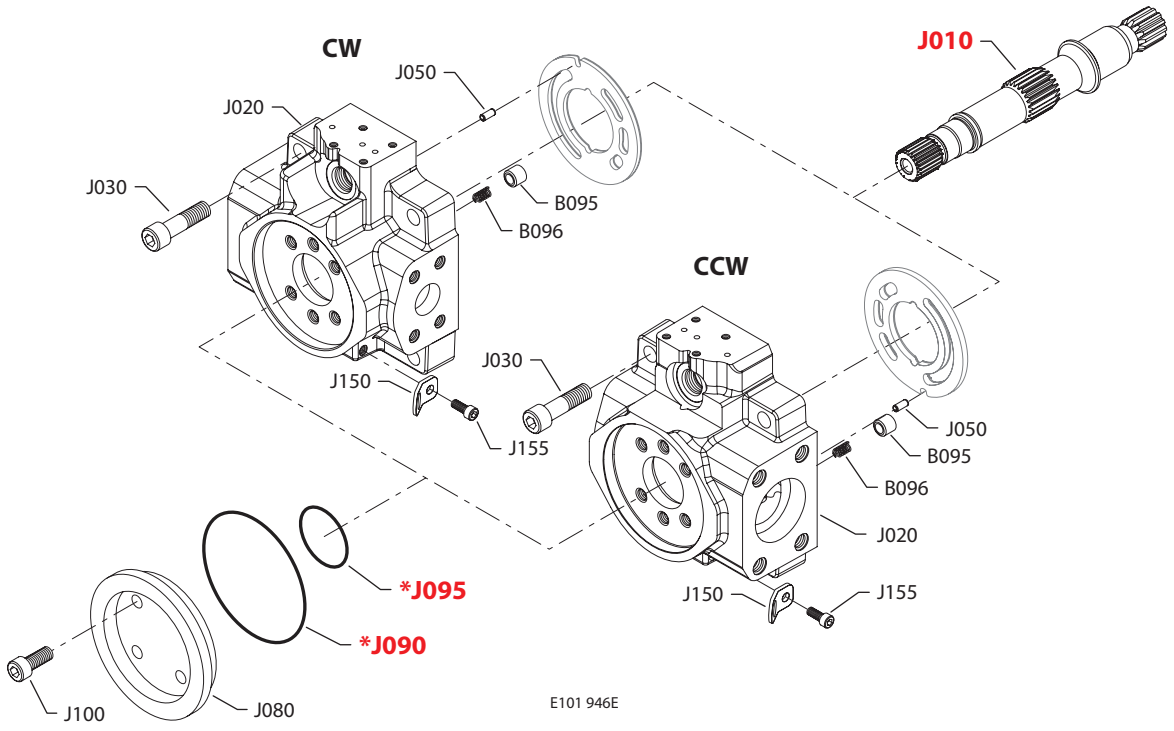

E101 946E

(A1TE)

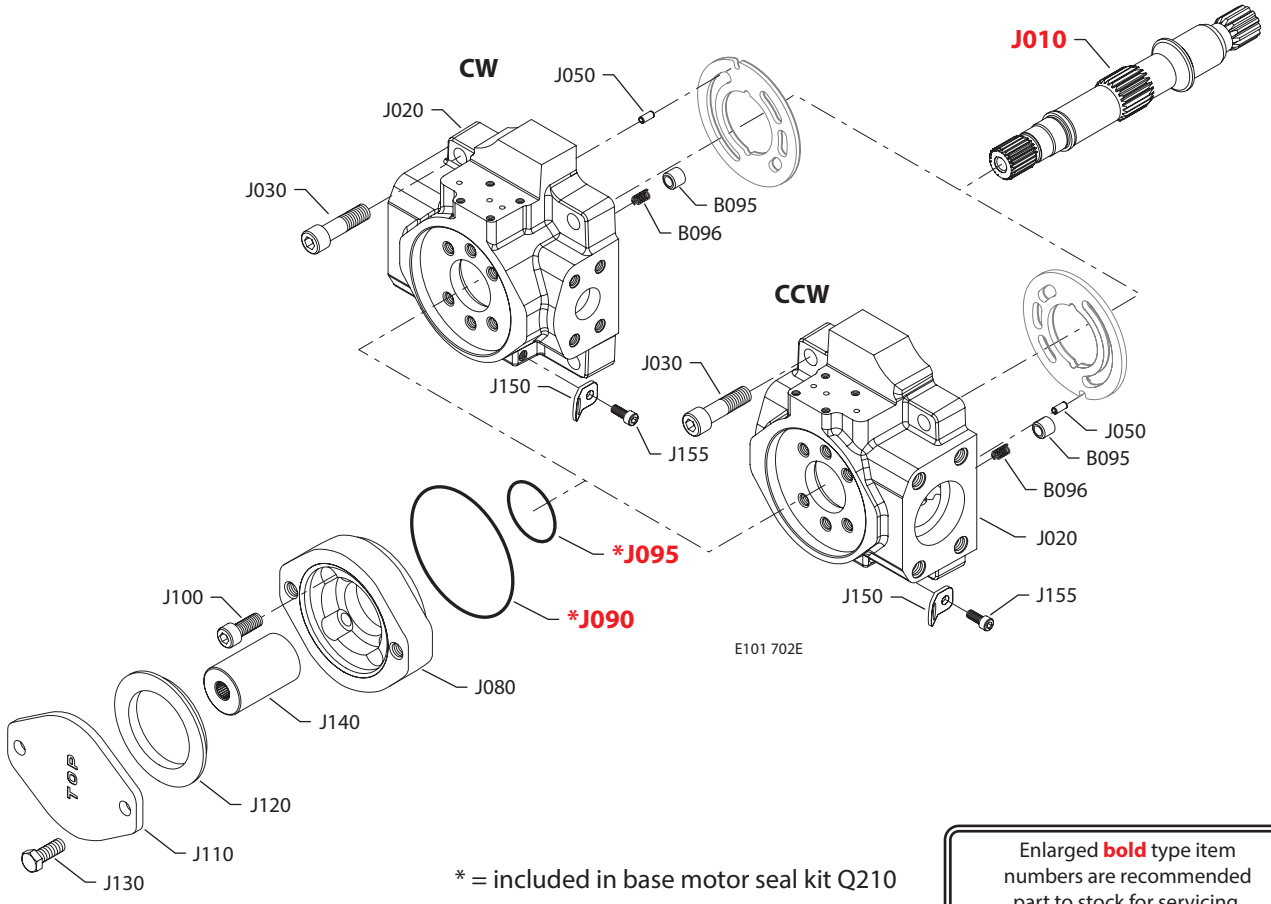

E101 702E

* = included in base motor seal kit Q210

Enlarged **bold** type item numbers are recommended part to stock for servicing.

Shaft, auxiliary flange and end cap

Shaft/auxiliary flange/end cap

Order code	Item	Date begin	Date end	Part number	Part name	Qty. per model/kit
A1RF	B095	13-28		1700256	Check valve poppet	1
	B096	13-28		1700257	Check valve spring	1
	J010	11-47		11127546	Shaft, 14 tooth w/auxiliary drive, extended	1
	J020	11-47		11095327	End cap, CW, radial ports, DL, gen. 2, JRR	1
	J020	11-47		11086919	End cap, CCW, radial ports, DL, gen. 2, JRL	1
	J030	11-47		5000181 (9007314-1210)	Screw	4
	J050	11-47		9004700-1907	Pin	1
	J080	11-47		4570179	Running cover	1
	J090	11-47		5000099 (9004100-1550)	O-ring	1
	J095	11-47		545434 (9004104-0310)	O-ring	1
	J100	11-47		5000489	Screw	4
	J150	11-47		4800754	Lifting bracket	1
	J155	11-47		9007315-0604	Screw	1
A1TE	B095	13-28		1700256	Check valve poppet	1
	B096	13-28		1700257	Check valve spring	1
	J010	13-28		11127546	Shaft, 14 tooth w/auxiliary drive, extended	1
	J020	13-28		11092368	End cap, CW, radial ports, gen. 2, JRR	1
	J020	13-28		11086934	End cap, CCW, radial ports, gen. 2, JRL	1
	J030	13-28		5000181 (9007314-1210)	Screw	4
	J050	13-28		9004700-1907	Pin	1
	J080	13-28		4570289	Flange adapter, A pad	1
	J090	13-28		5000099 (9004100-1550)	O-ring	1
	J095	13-28		545434 (9004100-0420)	O-ring	1
	J100	13-28		5000489	Screw	4
	J110	13-28		4460586	Cover plate	1
	J120	13-28		4800482	A pad seal	1
	J130	13-28		9007200-3712	Screw	2
	J140	13-28		1701186	Coupling, 11 tooth	1
	J150	13-28		4800754	Lifting bracket	1
	J155	13-28		9007315-0604	Screw	1

Shaft, auxiliary flange and end cap

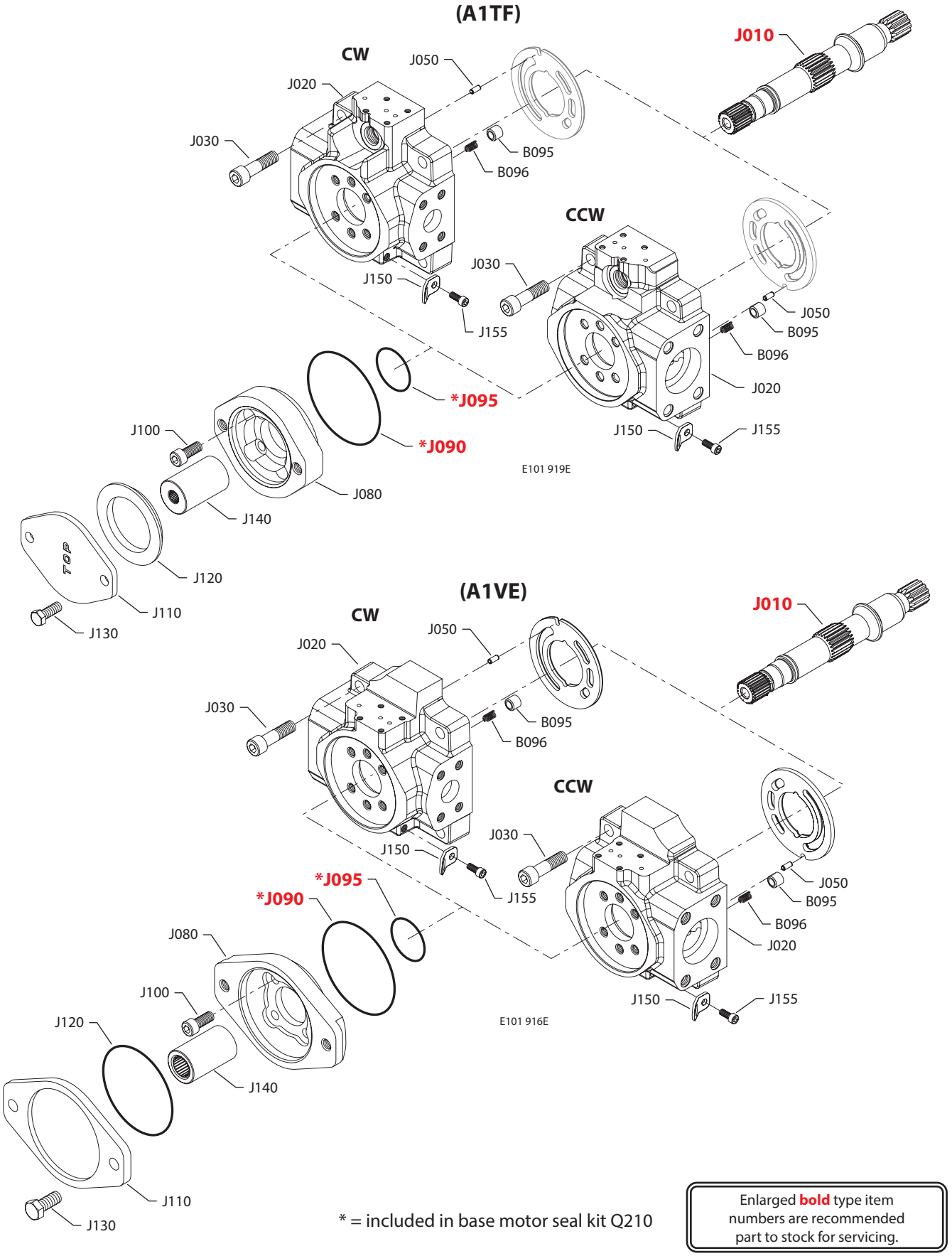

* = included in base motor seal kit Q210

Enlarged **bold** type item numbers are recommended part to stock for servicing.

Shaft, auxiliary flange and end cap

Shaft/auxiliary flange/end cap

Order code	Item	Date begin	Date end	Part number	Part name	Qty. per model/kit
A1TF	B095	13-28		1700256	Check valve poppet	1
	B096	13-28		1700257	Check valve spring	1
	J010	13-28		11127546	Shaft, 14 tooth w/auxiliary drive, extended	1
	J020	13-28		11095327	End cap, CW, radial ports, DL, gen. 2, JRR	1
	J020	13-28		11086919	End cap, CCW, radial ports, DL, gen. 2, JRL	1
	J030	13-28		5000181 (9007314-1210)	Screw	4
	J050	13-28		9004700-1907	Pin	1
	J080	13-28		4570289	Flange adapter, A pad	1
	J090	13-28		5000099 (9004100-1550)	O-ring	1
	J095	13-28		545434 (9004100-0420)	O-ring	1
	J100	13-28		5000489	Screw	4
	J110	13-28		4460586	Cover plate	1
	J120	13-28		4800482	A pad seal	1
	J130	13-28		9007200-3712	Screw	2
	J140	13-28		1701186	Coupling, 11 tooth	1
	J150	13-28		4800754	Lifting bracket	1
	J155	13-28		9007315-0604	Screw	1
A1VE	B095	13-28		1700256	Check valve poppet	1
	B096	13-28		1700257	Check valve spring	1
	J010	13-28		11127546	Shaft, 14 tooth w/auxiliary drive, extended	1
	J020	13-28		11092368	End cap, CW, radial ports, gen. 2, JRR	1
	J020	13-28		11086934	End cap, CCW, radial ports, gen. 2, JRL	1
	J030	13-28		5000181 (9007314-1210)	Screw	4
	J050	13-28		9004700-1907	Pin	1
	J080	13-28		4570210	Flange adapter, B pad	1
	J090	13-28		5000099 (9004100-1550)	O-ring	1
	J095	13-28		545434 (9004100-0420)	O-ring	1
	J100	13-28		5000489	Screw	4
	J110	13-28		4460370	Cover plate	1
	J120	13-28		9004104-0440	O-ring	1
	J130	13-28		9007200-5021	Screw	2
	J140	13-28		1701188	Coupling, 15 tooth	1
	J150	13-28		4800754	Lifting bracket	1
	J155	13-28		9007315-0604	Screw	1

Shaft, auxiliary flange and end cap

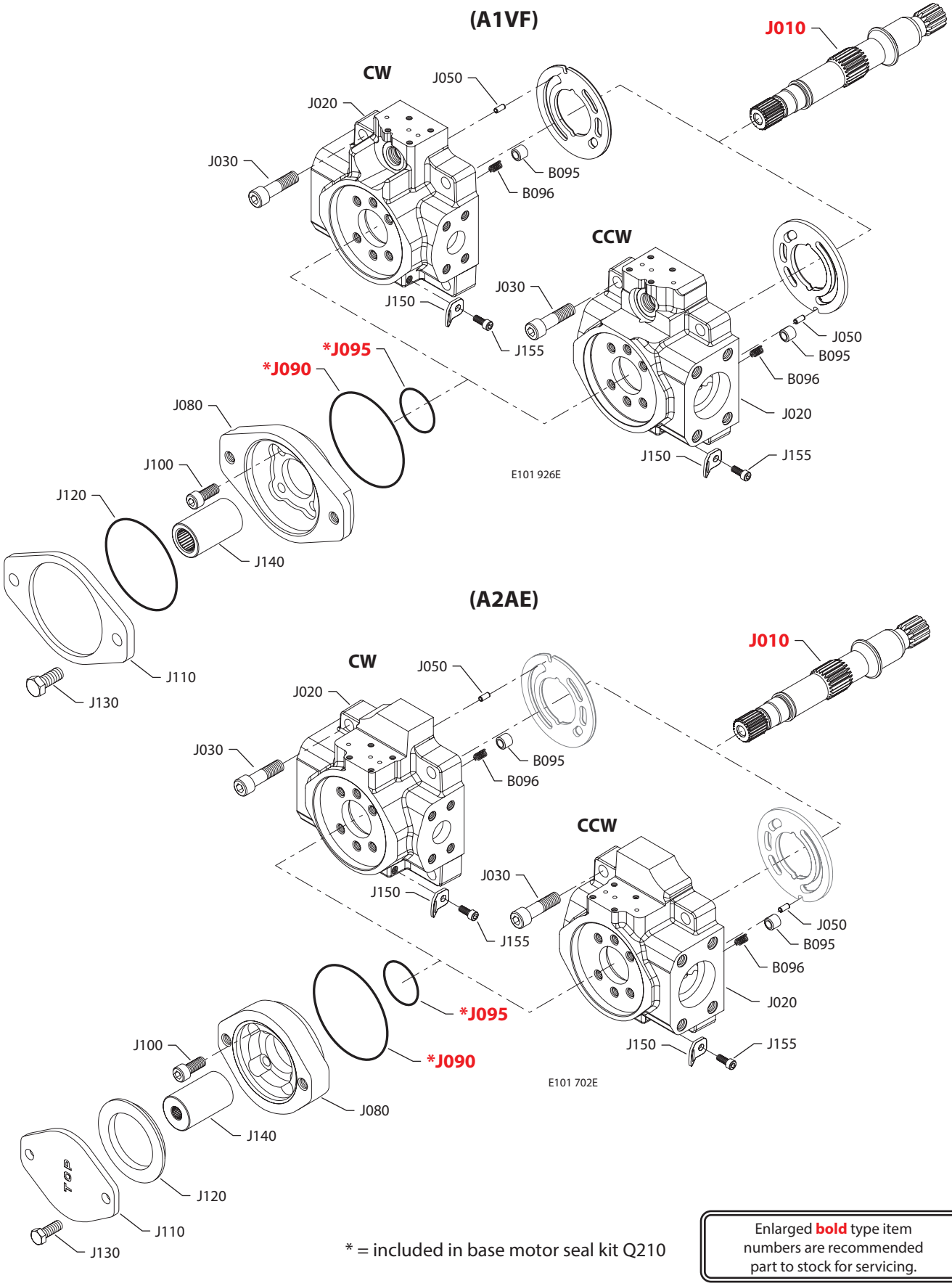

* = included in base motor seal kit Q210

Enlarged **bold** type item numbers are recommended part to stock for servicing.

Shaft, auxiliary flange and end cap

Shaft/auxiliary flange/end cap

Order code	Item	Date begin	Date end	Part number	Part name	Qty. per model/kit
A1VF	B095	13-28		1700256	Check valve poppet	1
	B096	13-28		1700257	Check valve spring	1
	J010	13-28		11127546	Shaft, 14 tooth w/auxiliary drive, extended	1
	J020	13-28		11095327	End cap, CW, radial ports, DL, gen. 2, JRR	1
	J020	13-28		11086919	End cap, CCW, radial ports, DL, gen. 2, JRL	1
	J030	13-28		5000181 (9007314-1210)	Screw	4
	J050	13-28		9004700-1907	Pin	1
	J080	13-28		4570210	Flange adapter, B pad	1
	J090	13-28		5000099 (9004100-1550)	O-ring	1
	J095	13-28		545434 (9004100-0420)	O-ring	1
	J100	13-28		5000489	Screw	4
	J110	13-28		4460370	Cover plate	1
	J120	13-28		9004104-0440	O-ring	1
	J130	13-28		9007200-5021	Screw	2
	J140	13-28		1701188	Coupling, 15 tooth	1
	J150	13-28		4800754	Lifting bracket	1
	J155	13-28		9007315-0604	Screw	1
A2AE	B095	13-28		1700256	Check valve poppet	1
	B096	13-28		1700257	Check valve spring	1
	J010	13-28		11127548	Shaft, 13 tooth w/auxiliary drive, extended	1
	J020	13-28		11092368	End cap, CW, radial ports, gen. 2, JRR	1
	J020	13-28		11086934	End cap, CCW, radial ports, gen. 2, JRL	1
	J030	13-28		5000181 (9007314-1210)	Screw	4
	J050	13-28		9004700-1907	Pin	1
	J080	13-28		4570289	Flange adapter, A pad	1
	J090	13-28		5000099 (9004100-1550)	O-ring	1
	J095	13-28		545434 (9004100-0420)	O-ring	1
	J100	13-28		5000489	Screw	4
	J110	13-28		4460586	Cover plate	1
	J120	13-28		4800482	A pad seal	1
	J130	13-28		9007200-3712	Screw	2
	J140	13-28		1701185	Coupling, 9 tooth	1
	J150	13-28		4800754	Lifting bracket	1
	J155	13-28		9007315-0604	Screw	1

Shaft, auxiliary flange and end cap

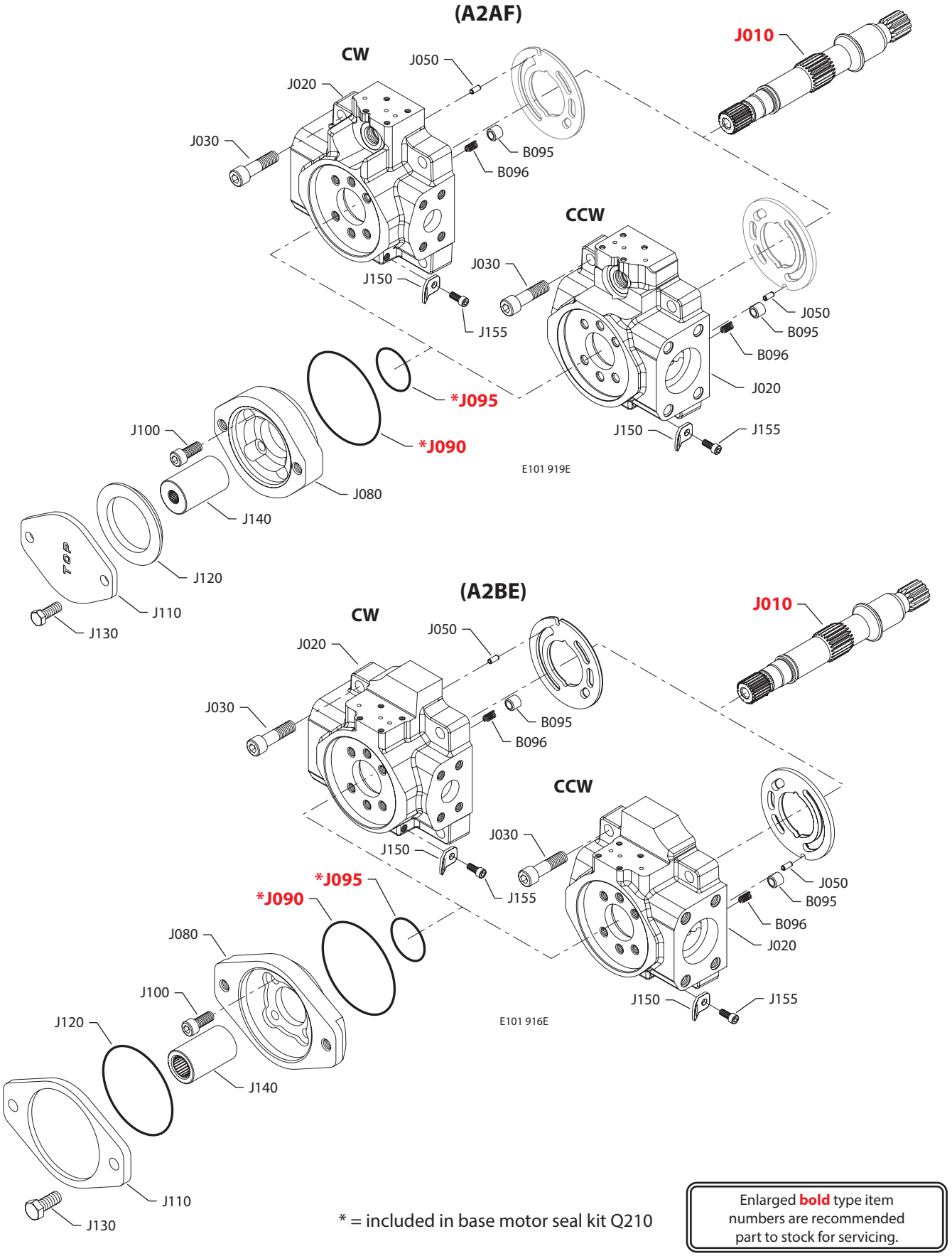

* = included in base motor seal kit Q210

Enlarged **bold** type item numbers are recommended part to stock for servicing.

Shaft, auxiliary flange and end cap

Shaft/auxiliary flange/end cap

Order code	Item	Date begin	Date end	Part number	Part name	Qty. per model/kit
A2AF	B095	13-28		1700256	Check valve poppet	1
	B096	13-28		1700257	Check valve spring	1
	J010	13-28		11127548	Shaft, 13 tooth w/auxiliary drive, extended	1
	J020	13-28		11095327	End cap, CW, radial ports, DL, gen. 2, JRR	1
	J020	13-28		11086919	End cap, CCW, radial ports, DL, gen. 2, JRL	1
	J030	13-28		5000181 (9007314-1210)	Screw	4
	J050	13-28		9004700-1907	Pin	1
	J080	13-28		4570289	Flange adapter, A pad	1
	J090	13-28		5000099 (9004100-1550)	O-ring	1
	J095	13-28		545434 (9004100-0420)	O-ring	1
	J100	13-28		5000489	Screw	4
	J110	13-28		4460586	Cover plate	1
	J120	13-28		4800482	A pad seal	1
	J130	13-28		9007200-3712	Screw	2
	J140	13-28		1701185	Coupling, 9 tooth	1
	J150	13-28		4800754	Lifting bracket	1
	J155	13-28		9007315-0604	Screw	1
A2BE	B095	13-28		1700256	Check valve poppet	1
	B096	13-28		1700257	Check valve spring	1
	J010	13-28		11127548	Shaft, 13 tooth w/auxiliary drive, extended	1
	J020	13-28		11092368	End cap, CW, radial ports, gen. 2, JRR	1
	J020	13-28		11086934	End cap, CCW, radial ports, gen. 2, JRL	1
	J030	13-28		5000181 (9007314-1210)	Screw	4
	J050	13-28		9004700-1907	Pin	1
	J080	13-28		4570210	Flange adapter, B pad	1
	J090	13-28		5000099 (9004100-1550)	O-ring	1
	J095	13-28		545434 (9004100-0420)	O-ring	1
	J100	13-28		5000489	Screw	4
	J110	13-28		4460370	Cover plate	1
	J120	13-28		9004104-0440	O-ring	1
	J130	13-28		9007200-5021	Screw	2
	J140	13-28		1701187	Coupling, 13 tooth	1
	J150	13-28		4800754	Lifting bracket	1
	J155	13-28		9007315-0604	Screw	1

Shaft, auxiliary flange and end cap

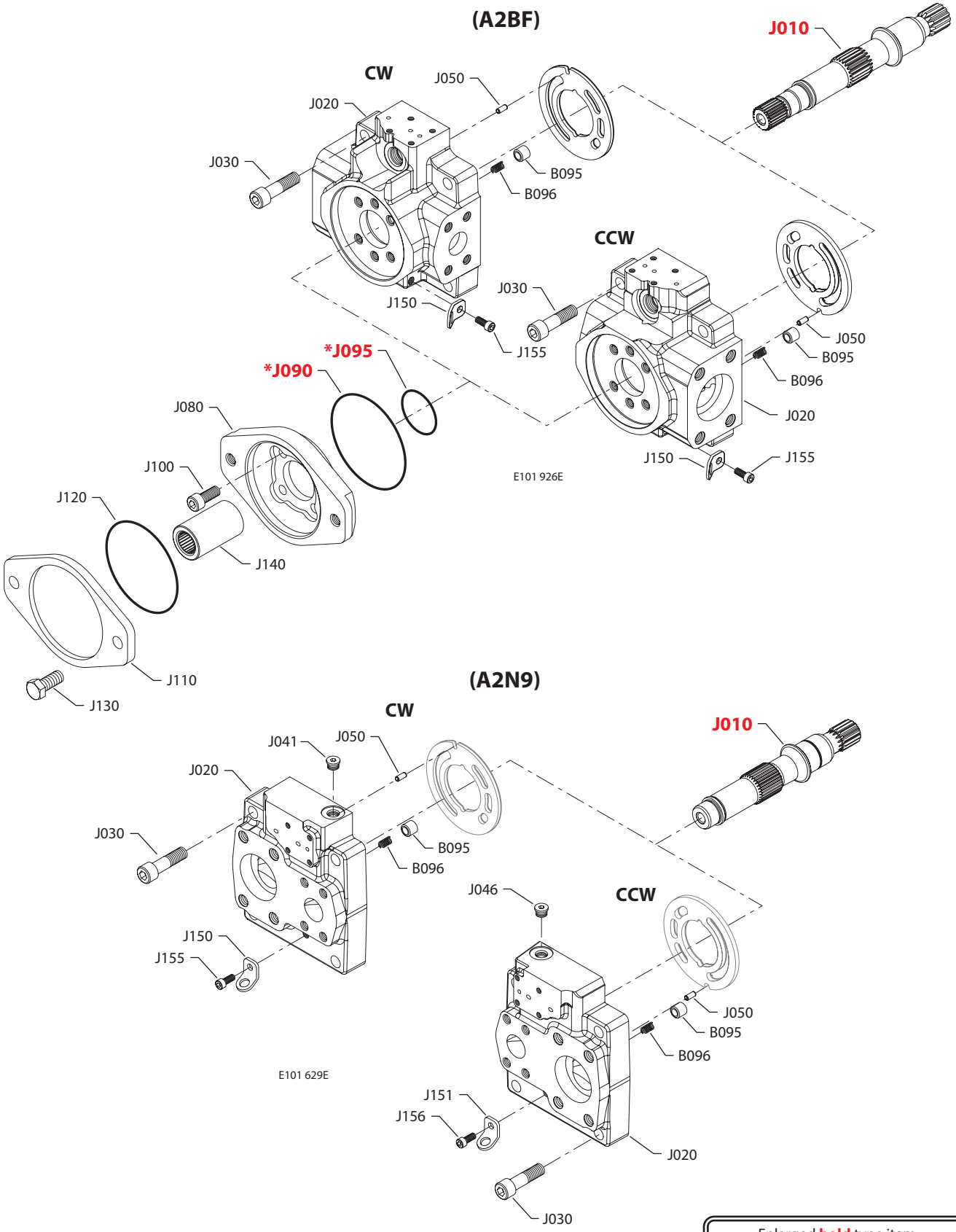

* = included in base motor seal kit Q210

Enlarged **bold** type item numbers are recommended part to stock for servicing.

Shaft, auxiliary flange and end cap

Shaft/auxiliary flange/end cap

Order code	Item	Date begin	Date end	Part number	Part name	Qty. per model/kit
A2BF	B095	13-28		1700256	Check valve poppet	1
	B096	13-28		1700257	Check valve spring	1
	J010	13-28		11127548	Shaft, 13 tooth w/auxiliary drive, extended	1
	J020	13-28		11095327	End cap, CW, radial ports, DL, gen. 2, JRR	1
	J020	13-28		11086919	End cap, CCW, radial ports, DL, gen. 2, JRL	1
	J030	13-28		5000181 (9007314-1210)	Screw	4
	J050	13-28		9004700-1907	Pin	1
	J080	13-28		4570210	Flange adapter, B pad	1
	J090	13-28		5000099 (9004100-1550)	O-ring	1
	J095	13-28		545434 (9004100-0420)	O-ring	1
	J100	13-28		5000489	Screw	4
	J110	13-28		4460370	Cover plate	1
	J120	13-28		9004104-0440	O-ring	1
	J130	13-28		9007200-5021	Screw	2
	J140	13-28		1701187	Coupling, 13 tooth	1
	J150	13-28		4800754	Lifting bracket	1
	J155	13-28		9007315-0604	Screw	1
A2N9	B095	13-28		1700256	Check valve poppet	1
	B096	13-28		1700257	Check valve spring	1
	J010	13-28		11127547	Shaft, 13 tooth, without auxiliary drive, extended	1
	J020	13-28		11095294	End cap, CW, axial ports, gen. 2, JRR	1
	J020	13-28		11095297	End cap, CCW, axial ports, gen. 2, JRL	1
	J030	13-28		5000181 (9007314-1210)	Screw	4
	J041	13-28		140644 (9005110-5600)	Plug assembly, JRR	1
	J046	13-28		140644 (9005110-5600)	Plug assembly, JRL	1
	J050	13-28		9004700-1907	Pin	1
	J150	13-28		4800754	Lifting bracket, JRR	1
	J151	13-28		4800754	Lifting bracket, JRL	1
	J155	13-28		9007315-0604	Screw, JRR	1
	J156	13-28		9007315-0604	Screw, JRL	1

Shaft, auxiliary flange and end cap

(A2NE)

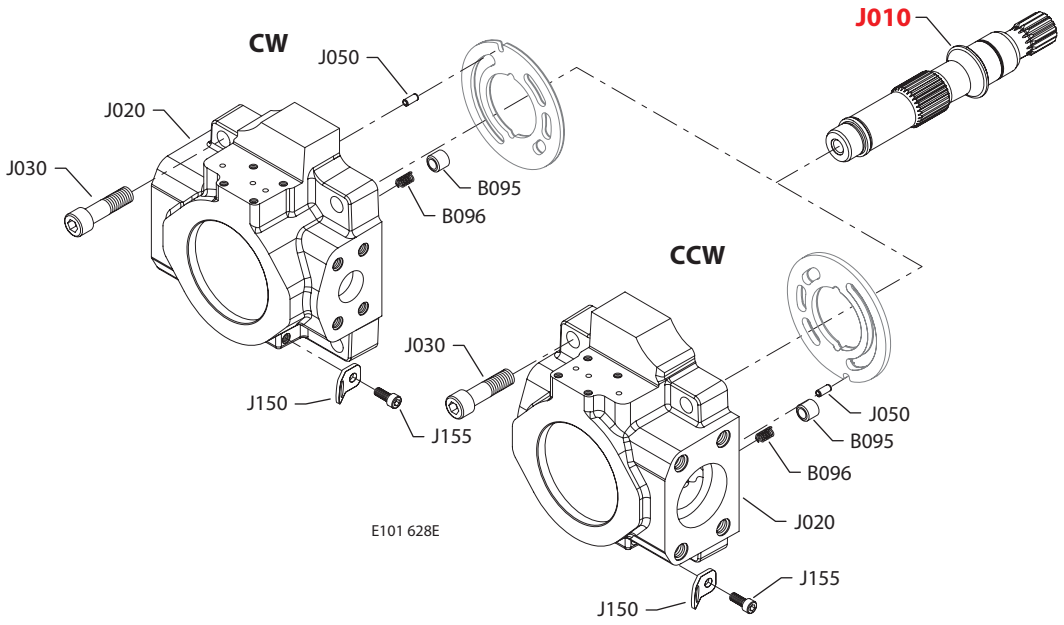

(A2NH)

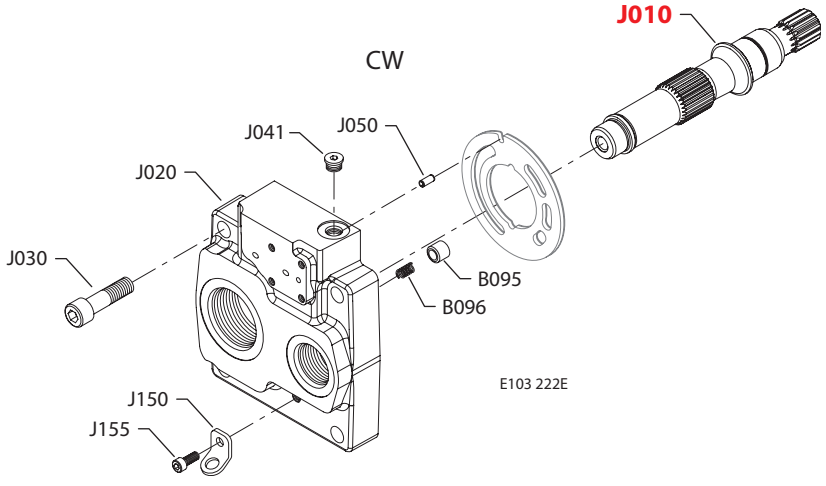

* = included in base motor seal kit Q210

Enlarged **bold** type item numbers are recommended part to stock for servicing.

Shaft, auxiliary flange and end cap

Shaft/auxiliary flange/end cap

Order code	Item	Date begin	Date end	Part number	Part name	Qty. per model/kit
A2NE	B095	13-28		1700256	Check valve poppet	1
	B096	13-28		1700257	Check valve spring	1
	J010	13-28		11127547	Shaft, 13 tooth, without auxiliary drive, extended	1
	J020	13-28		11095323	End cap, CW, radial ports, gen. 2, JRR	1
	J020	13-28		11082641	End cap, CCW, radial ports, gen. 2, JRL	1
	J030	13-28		5000181 (9007314-1210)	Screw	4
	J050	13-28		9004700-1907	Pin	1
	J150	13-28		4800754	Lifting bracket	1
	J155	13-28		9007315-0604	Screw	1
A2NH	B095	13-28		1700256	Check valve poppet	1
	B096	13-28		1700257	Check valve spring	1
	J010	13-28		11127547	Shaft, 13 tooth, without auxiliary drive, extended	1
	J020	13-28		11095295	End cap, CW, axial ports, gen. 2, JRR	1
	J030	13-28		5000181 (9007314-1210)	Screw	4
	J041	13-28		140644 (9005110-5600)	Plug assembly, JRR	1
	J050	13-28		9004700-1907	Pin	1
	J150	13-28		4800754	Lifting bracket	1
	J155	13-28		9007315-0604	Screw	1

Shaft, auxiliary flange and end cap

(A2NV)

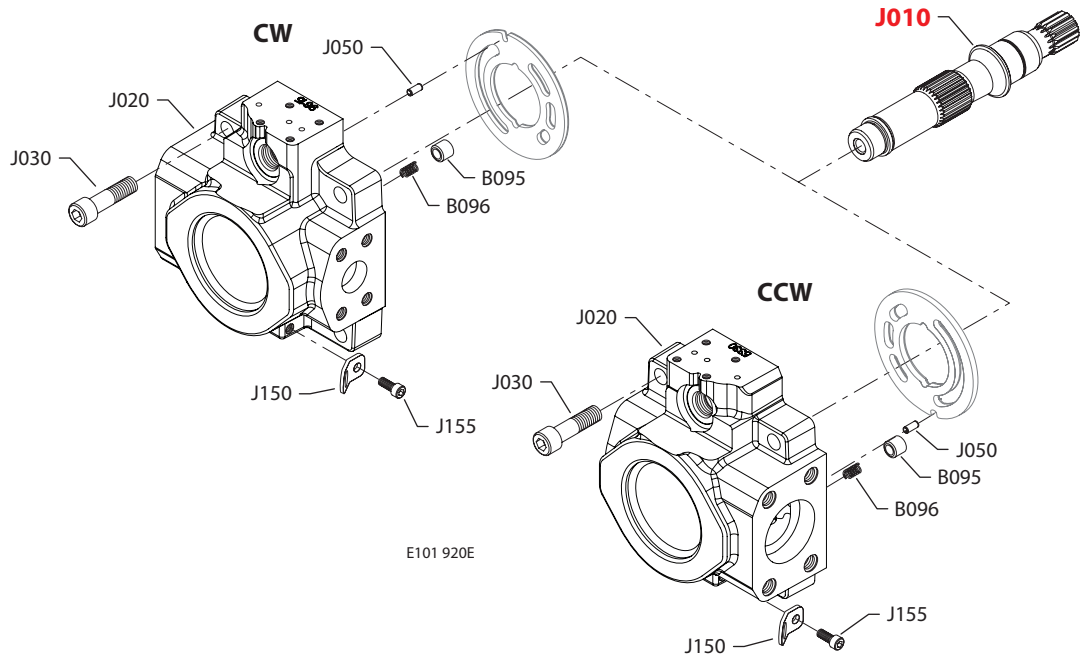

(A2NZ)

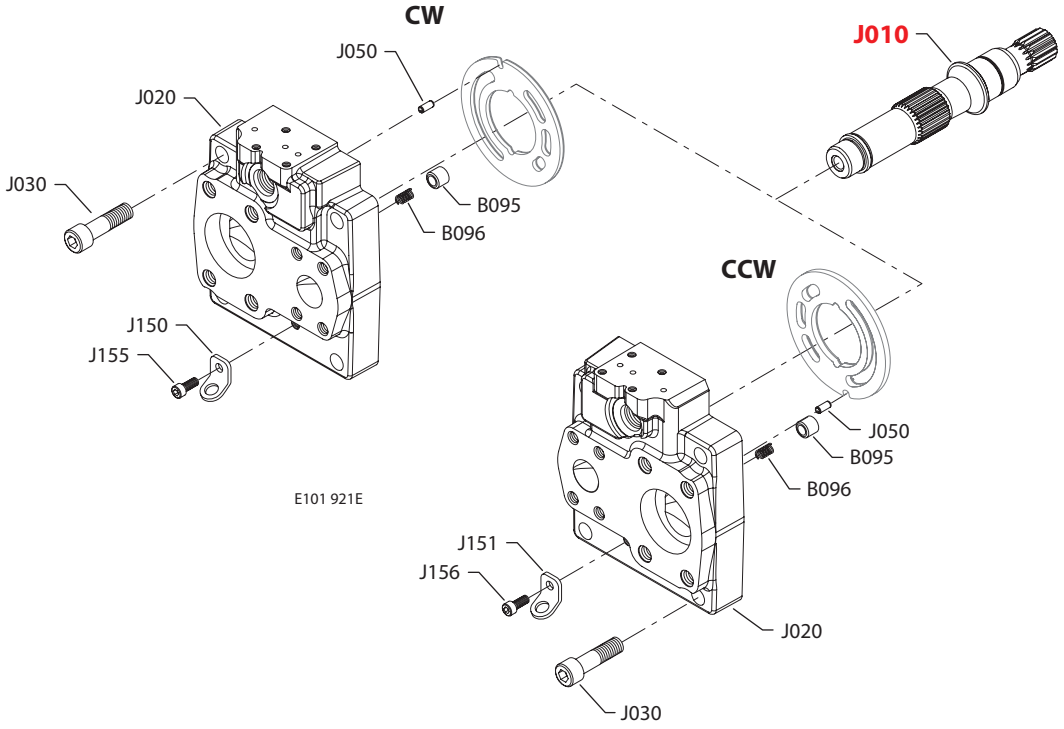

* = included in base motor seal kit Q210

Enlarged **bold** type item numbers are recommended part to stock for servicing.

Shaft, auxiliary flange and end cap

Shaft/auxiliary flange/end cap

Order code	Item	Date begin	Date end	Part number	Part name	Qty. per model/kit
A2NV	B095	13-28		1700256	Check valve poppet	1
	B096	13-28		1700257	Check valve spring	1
	J010	13-28		11127547	Shaft, 13 tooth, without auxiliary drive, extended	1
	J020	13-28		11099615	End cap, CW, axial ports, gen. 2, JRR	1
	J020	13-28		11095330	End cap, CCW, axial ports, gen. 2, JRL	1
	J030	13-28		5000181 (9007314-1210)	Screw	4
	J050	13-28		9004700-1907	Pin	1
	J150	13-28		4800754	Lifting bracket	1
	J155	13-28		9007315-0604	Screw	1
A2NZ	B095	13-28		1700256	Check valve poppet	1
	B096	13-28		1700257	Check valve spring	1
	J010	13-28		11127547	Shaft, 13 tooth, without auxiliary drive, extended	1
	J020	13-28		11095296	End cap, CW, radial ports, DL, gen. 2, JRR	1
	J020	13-28		11095299	End cap, CCW, radial ports, DL, gen. 2, JRL	1
	J030	13-28		5000181 (9007314-1210)	Screw	4
	J050	13-28		9004700-1907	Pin	1
	J150	13-28		4800754	Lifting bracket, JRR	1
	J151	13-28		4800754	Lifting bracket, JRL	1
	J155	13-28		9007315-0604	Screw, JRR	1
	J156	13-28		9007315-0604	Screw, JRL	1

Shaft, auxiliary flange and end cap

(A2RE)

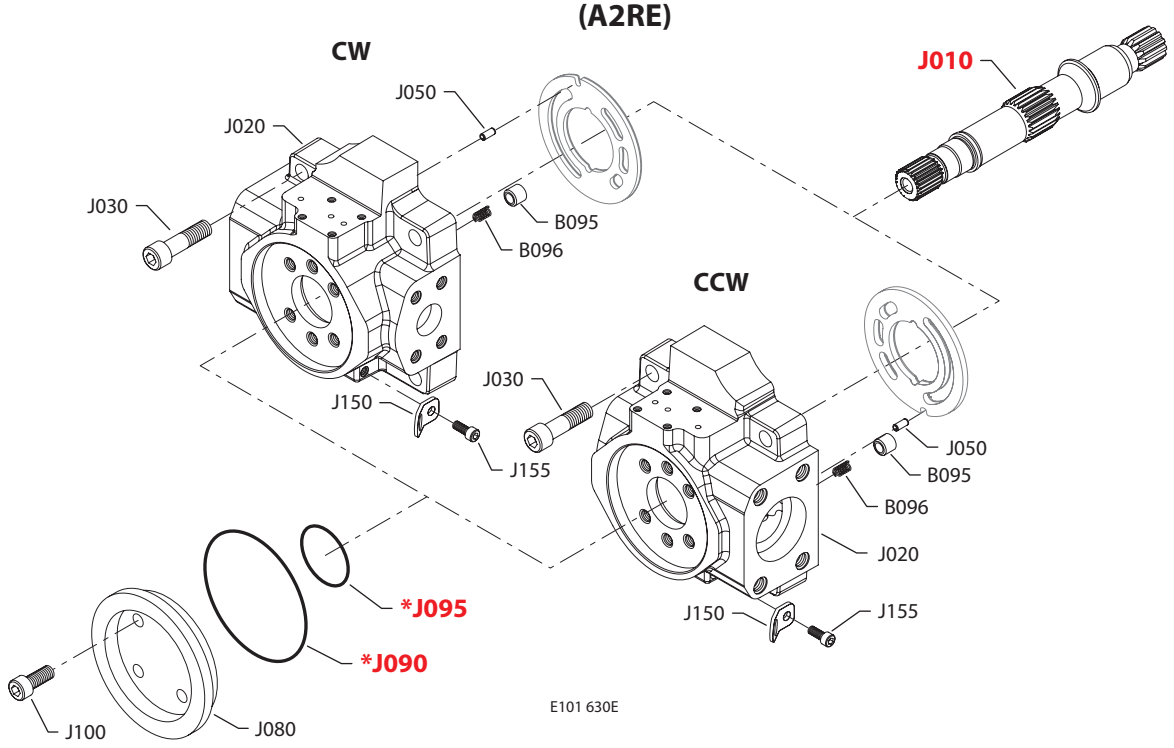

E101 630E

(A2RF)

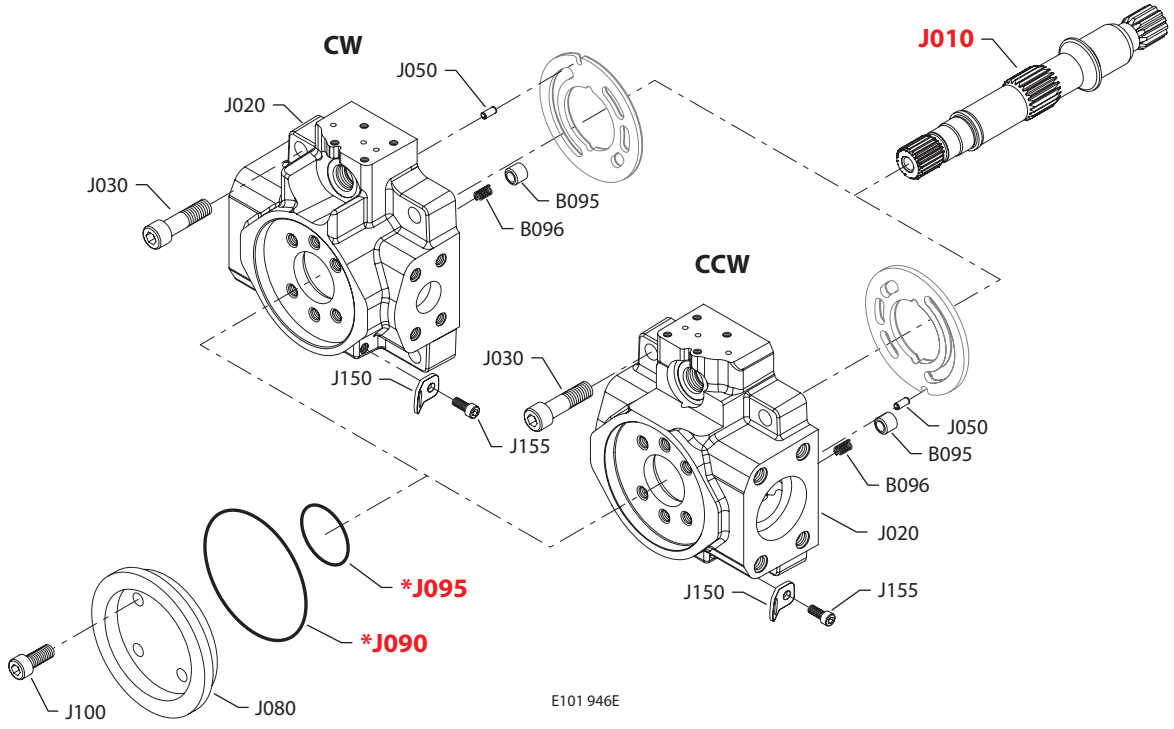

E101 946E

* = included in base motor seal kit Q210

Enlarged **bold** type item numbers are recommended part to stock for servicing.

Shaft, auxiliary flange and end cap

Shaft/auxiliary flange/end cap

Order code	Item	Date begin	Date end	Part number	Part name	Qty. per model/kit
A2RE	B095	13-28		1700256	Check valve poppet	1
	B096	13-28		1700257	Check valve spring	1
	J010	13-28		11127548	Shaft, 13 tooth w/auxiliary drive, extended	1
	J020	13-28		11092368	End cap, CW, radial ports, gen. 2, JRR	1
	J020	13-28		11086934	End cap, CCW, radial ports, gen. 2, JRRL	1
	J030	13-28		5000181 (9007314-1210)	Screw	4
	J050	13-28		9004700-1907	Pin	1
	J080	13-28		4570179	Running cover	1
	J090	13-28		5000099 (9004100-1550)	O-ring	1
	J095	13-28		545434 (9004104-0310)	O-ring	1
	J100	13-28		5000489	Screw	4
	J150	13-28		4800754	Lifting bracket	1
	J155	13-28		9007315-0604	Screw	1
A2RF	B095	13-28		1700256	Check valve poppet	1
	B096	13-28		1700257	Check valve spring	1
	J010	13-28		11127548	Shaft, 13 tooth w/auxiliary drive, extended	1
	J020	13-28		11095327	End cap, CW, radial ports, DL, gen. 2, JRR	1
	J020	13-28		11086919	End cap, CCW, radial ports, DL, gen. 2, JRL	1
	J030	13-28		5000181 (9007314-1210)	Screw	4
	J050	13-28		9004700-1907	Pin	1
	J080	13-28		4570179	Running cover	1
	J090	13-28		5000099 (9004100-1550)	O-ring	1
	J095	13-28		545434 (9004104-0310)	O-ring	1
	J100	13-28		5000489	Screw	4
	J150	13-28		4800754	Lifting bracket	1
	J155	13-28		9007315-0604	Screw	1

Shaft, auxiliary flange and end cap

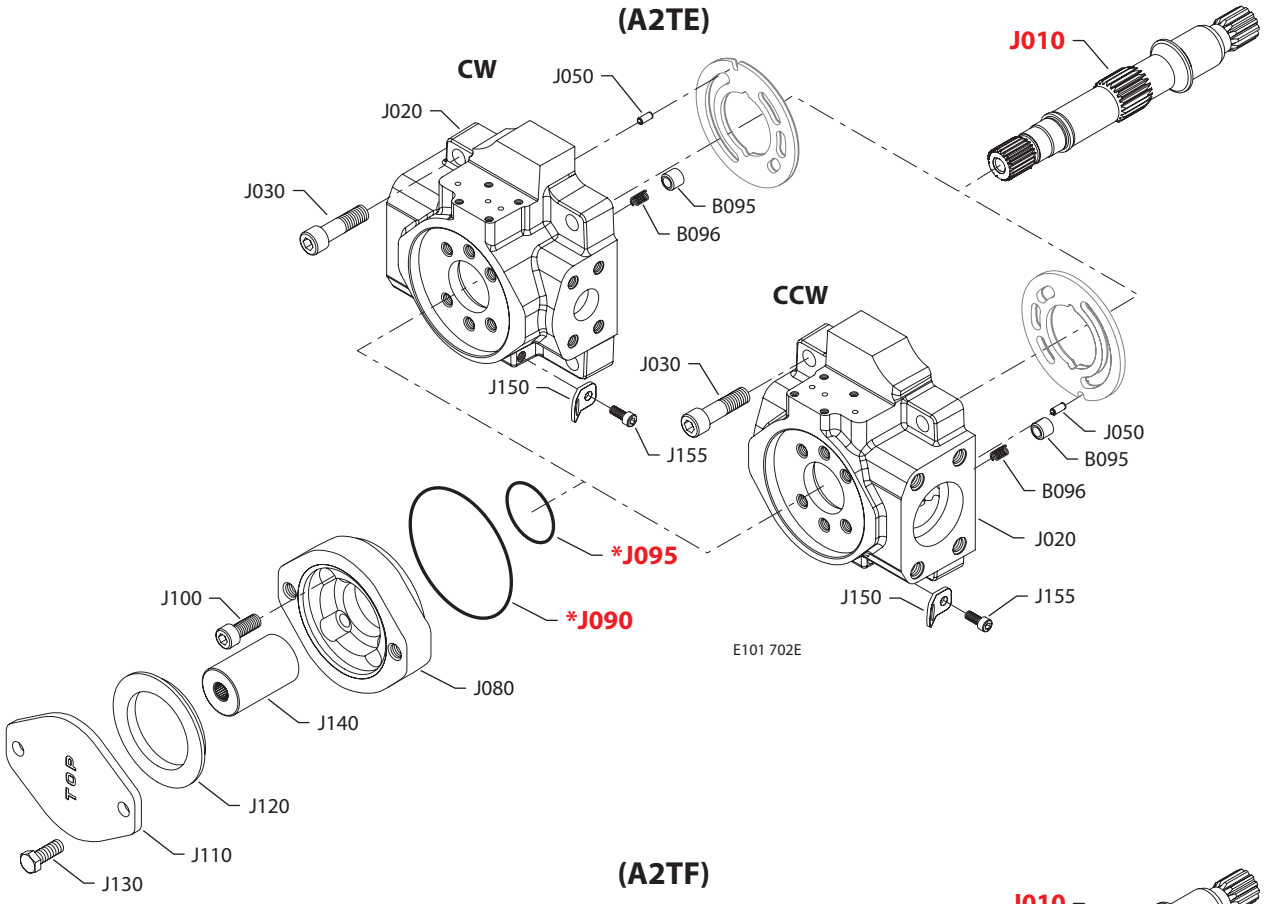

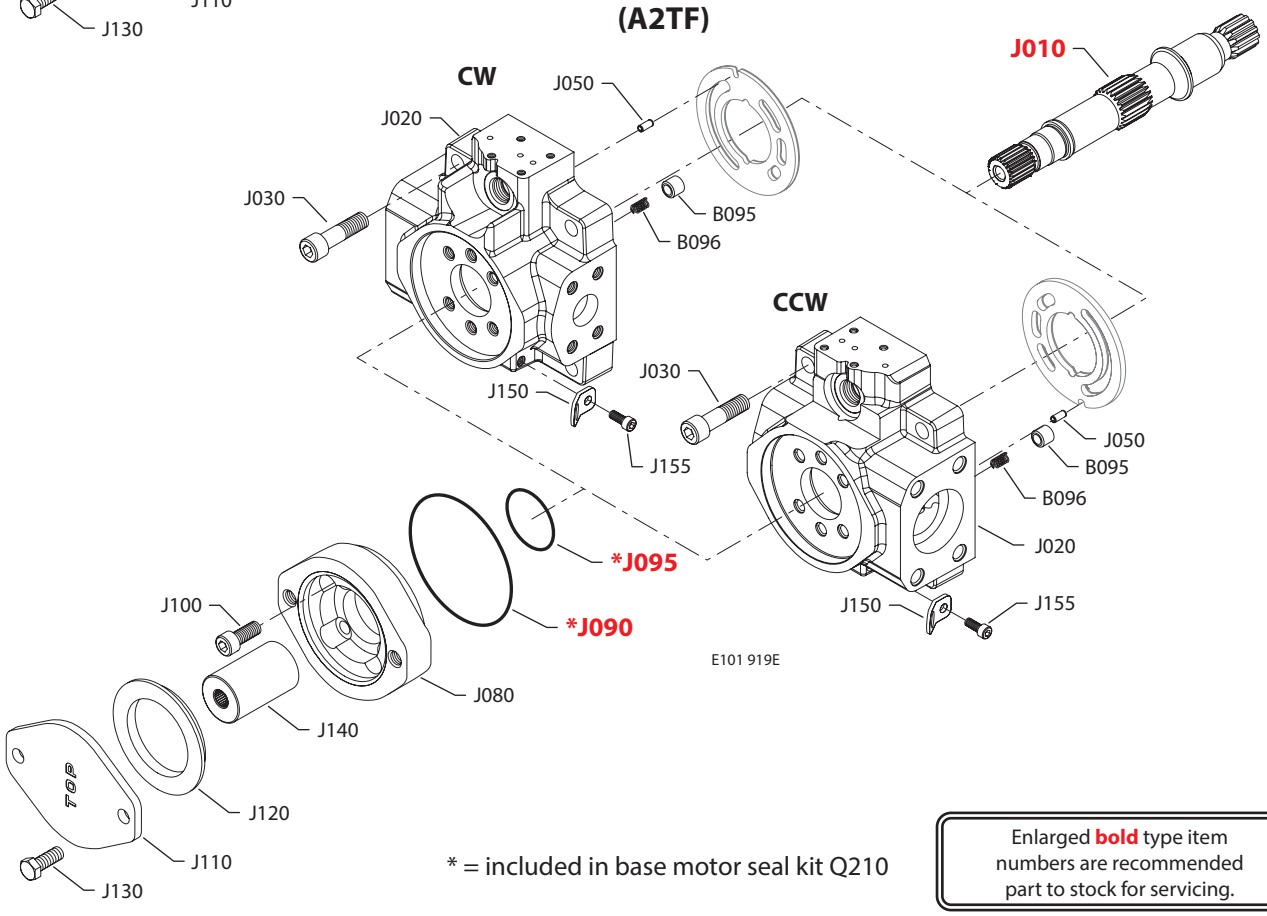

* = included in base motor seal kit Q210

Enlarged **bold** type item numbers are recommended part to stock for servicing.

Shaft, auxiliary flange and end cap

Shaft/auxiliary flange/end cap

Order code	Item	Date begin	Date end	Part number	Part name	Qty. per model/kit
A2TE	B095	13-28		1700256	Check valve poppet	1
	B096	13-28		1700257	Check valve spring	1
	J010	13-28		11127548	Shaft, 13 tooth w/auxiliary drive, extended	1
	J020	13-28		11092368	End cap, CW, radial ports, gen. 2, JRR	1
	J020	13-28		11086934	End cap, CCW, radial ports, gen. 2, JRL	1
	J030	13-28		5000181 (9007314-1210)	Screw	4
	J050	13-28		9004700-1907	Pin	1
	J080	13-28		4570289	Flange adapter, A pad	1
	J090	13-28		5000099 (9004100-1550)	O-ring	1
	J095	13-28		545434 (9004100-0420)	O-ring	1
	J100	13-28		5000489	Screw	4
	J110	13-28		4460586	Cover plate	1
	J120	13-28		4800482	A pad seal	1
	J130	13-28		9007200-3712	Screw	2
	J140	13-28		1701186	Coupling, 11 tooth	1
	J150	13-28		4800754	Lifting bracket	1
	J155	13-28		9007315-0604	Screw	1
A2TF	B095	13-28		1700256	Check valve poppet	1
	B096	13-28		1700257	Check valve spring	1
	J010	13-28		11127548	Shaft, 13 tooth w/auxiliary drive, extended	1
	J020	13-28		11095327	End cap, CW, radial ports, DL, gen. 2, JRR	1
	J020	13-28		11086919	End cap, CCW, radial ports, DL, gen. 2, JRL	1
	J030	13-28		5000181 (9007314-1210)	Screw	4
	J050	13-28		9004700-1907	Pin	1
	J080	13-28		4570289	Flange adapter, A pad	1
	J090	13-28		5000099 (9004100-1550)	O-ring	1
	J095	13-28		545434 (9004100-0420)	O-ring	1
	J100	13-28		5000489	Screw	4
	J110	13-28		4460586	Cover plate	1
	J120	13-28		4800482	A pad seal	1
	J130	13-28		9007200-3712	Screw	2
	J140	13-28		1701186	Coupling, 11 tooth	1
	J150	13-28		4800754	Lifting bracket	1
	J155	13-28		9007315-0604	Screw	1

Shaft, auxiliary flange and end cap

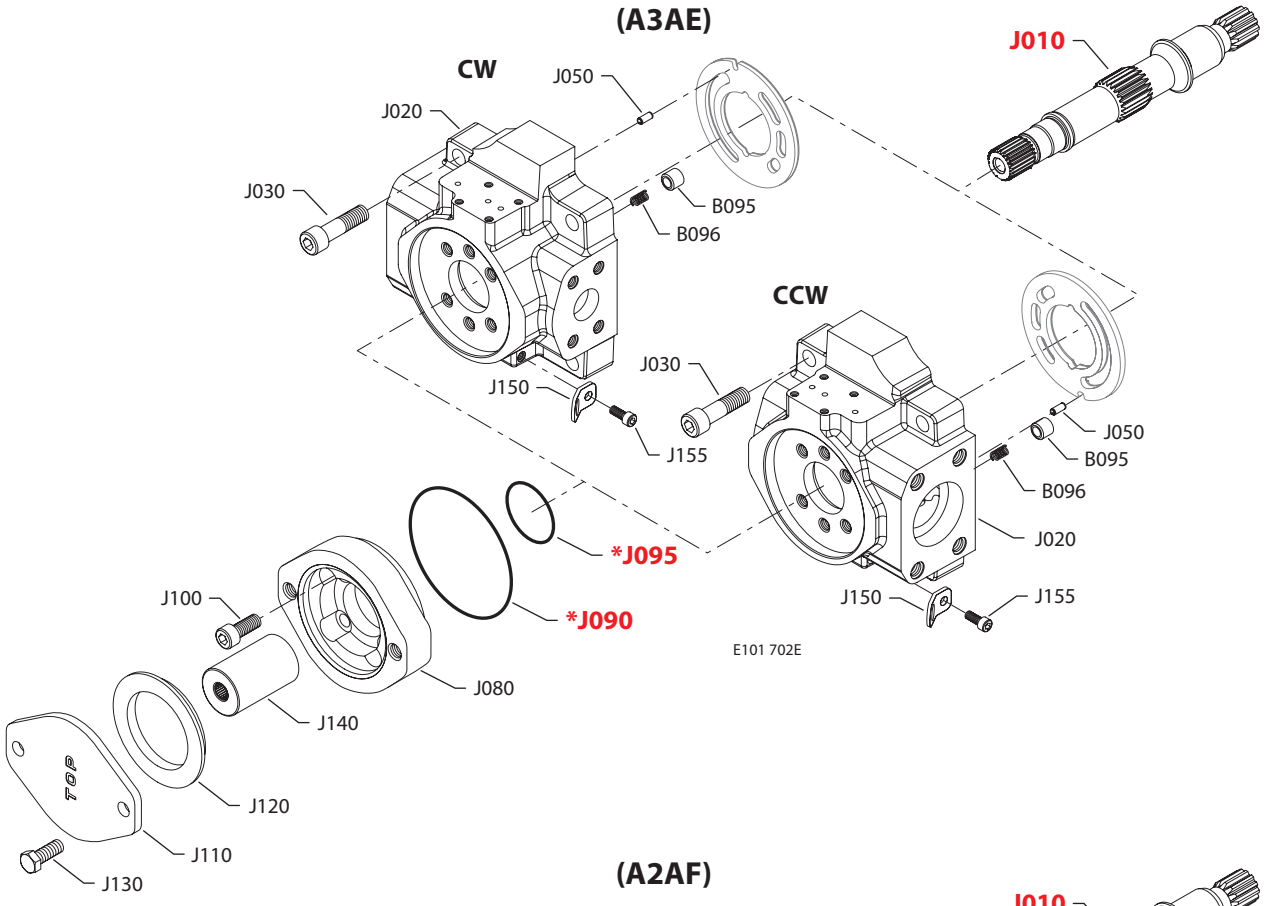

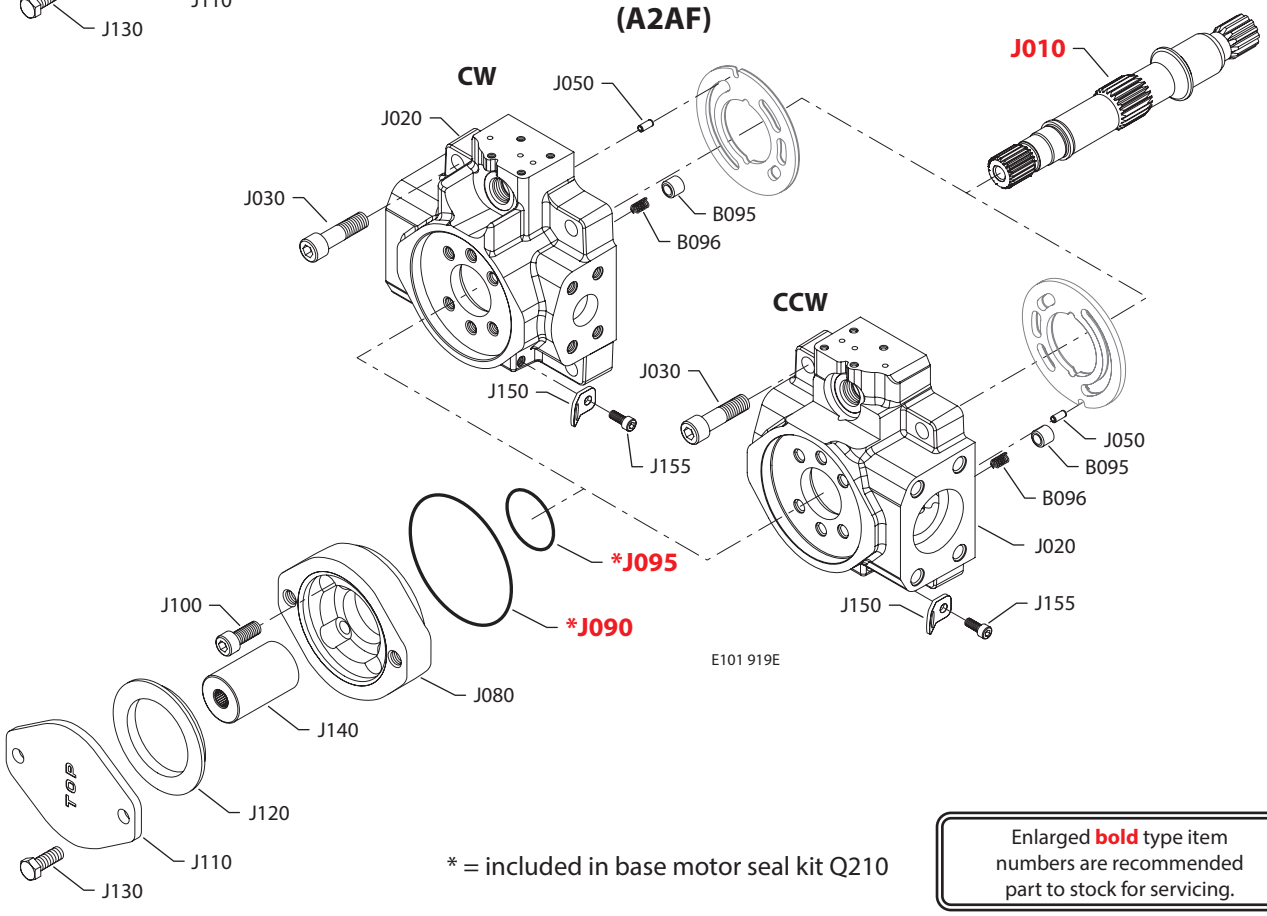

* = included in base motor seal kit Q210

Enlarged **bold** type item numbers are recommended part to stock for servicing.

Shaft, auxiliary flange and end cap

Shaft/auxiliary flange/end cap

Order code	Item	Date begin	Date end	Part number	Part name	Qty. per model/kit
A3AE	B095	13-28		1700256	Check valve poppet	1
	B096	13-28		1700257	Check valve spring	1
	J010	13-28		11130194	Shaft, 15 tooth w/auxiliary drive, extended	1
	J020	13-28		11092368	End cap, CW, radial ports, gen. 2, JRR	1
	J020	13-28		11086934	End cap, CCW, radial ports, gen. 2, JRL	1
	J030	13-28		5000181 (9007314-1210)	Screw	4
	J050	13-28		9004700-1907	Pin	1
	J080	13-28		4570289	Flange adapter, A pad	1
	J090	13-28		5000099 (9004100-1550)	O-ring	1
	J095	13-28		545434 (9004100-0420)	O-ring	1
	J100	13-28		5000489	Screw	4
	J110	13-28		4460586	Cover plate	1
	J120	13-28		4800482	A pad seal	1
	J130	13-28		9007200-3712	Screw	2
	J140	13-28		1701185	Coupling, 9 tooth	1
	J150	13-28		4800754	Lifting bracket	1
	J155	13-28		9007315-0604	Screw	1
A3AF	B095	13-28		1700256	Check valve poppet	1
	B096	13-28		1700257	Check valve spring	1
	J010	13-28		11130194	Shaft, 15 tooth w/auxiliary drive, extended	1
	J020	13-28		11095327	End cap, CW, radial ports, DL, gen. 2, JRR	1
	J020	13-28		11086919	End cap, CCW, radial ports, DL, gen. 2, JRL	1
	J030	13-28		5000181 (9007314-1210)	Screw	4
	J050	13-28		9004700-1907	Pin	1
	J080	13-28		4570289	Flange adapter, A pad	1
	J090	13-28		5000099 (9004100-1550)	O-ring	1
	J095	13-28		545434 (9004100-0420)	O-ring	1
	J100	13-28		5000489	Screw	4
	J110	13-28		4460586	Cover plate	1
	J120	13-28		4800482	A pad seal	1
	J130	13-28		9007200-3712	Screw	2
	J140	13-28		1701185	Coupling, 9 tooth	1
	J150	13-28		4800754	Lifting bracket	1
	J155	13-28		9007315-0604	Screw	1

Shaft, auxiliary flange and end cap

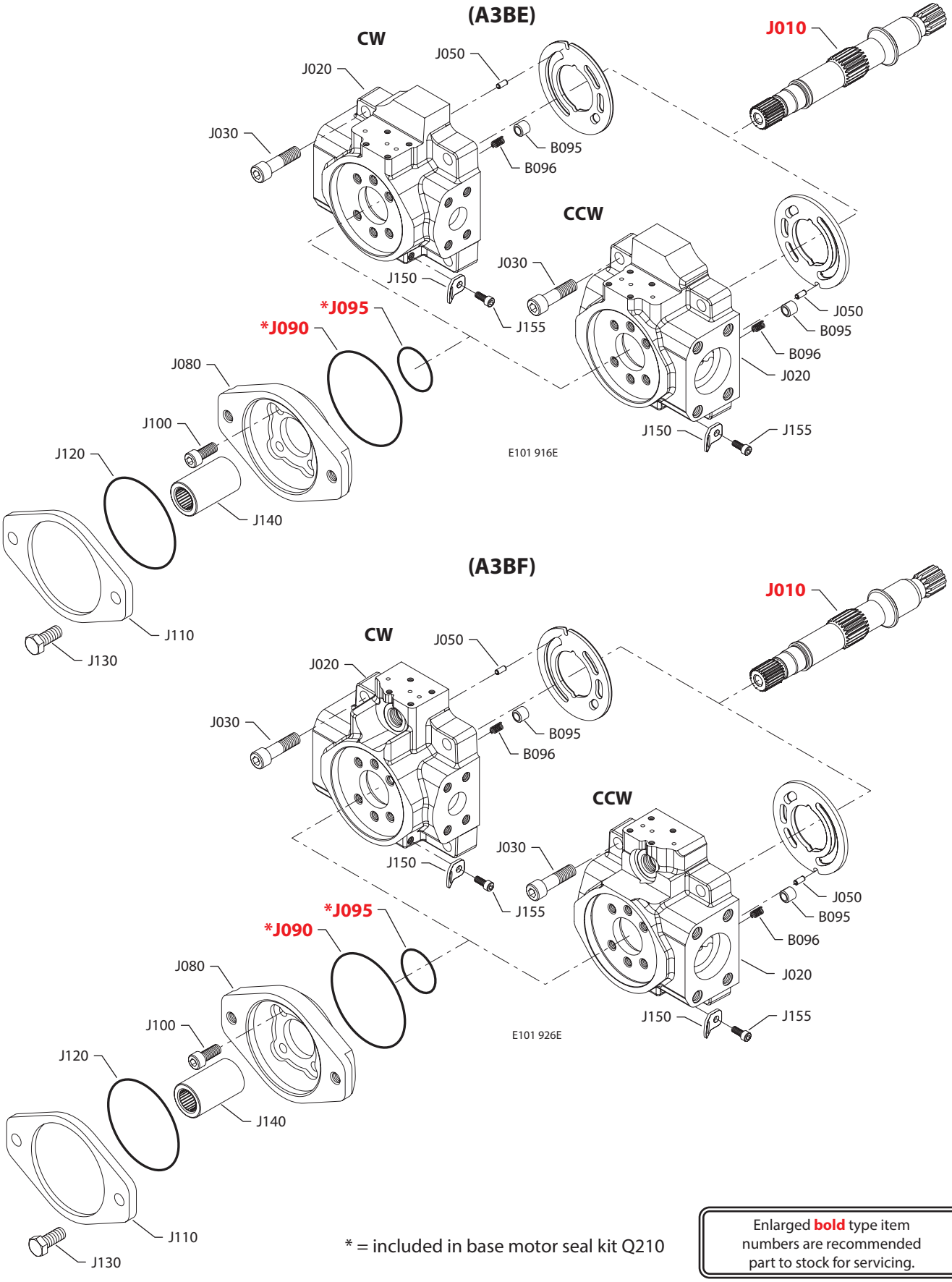

* = included in base motor seal kit Q210

Enlarged **bold** type item numbers are recommended part to stock for servicing.

Shaft, auxiliary flange and end cap

Shaft/auxiliary flange/end cap

Order code	Item	Date begin	Date end	Part number	Part name	Qty. per model/kit
A3BE	B095	13-28		1700256	Check valve poppet	1
	B096	13-28		1700257	Check valve spring	1
	J010	13-28		11130194	Shaft, 15 tooth w/auxiliary drive, extended	1
	J020	13-28		11092368	End cap, CW, radial ports, gen. 2, JRR	1
	J020	13-28		11086934	End cap, CCW, radial ports, gen. 2, JRL	1
	J030	13-28		5000181 (9007314-1210)	Screw	4
	J050	13-28		9004700-1907	Pin	1
	J080	13-28		4570210	Flange adapter, B pad	1
	J090	13-28		5000099 (9004100-1550)	O-ring	1
	J095	13-28		545434 (9004100-0420)	O-ring	1
	J100	13-28		5000489	Screw	4
	J110	13-28		4460370	Cover plate	1
	J120	13-28		9004104-0440	O-ring	1
	J130	13-28		9007200-5021	Screw	2
	J140	13-28		1701187	Coupling, 13 tooth	1
	J150	13-28		4800754	Lifting bracket	1
	J155	13-28		9007315-0604	Screw	1
A3BF	B095	13-28		1700256	Check valve poppet	1
	B096	13-28		1700257	Check valve spring	1
	J010	13-28		11130194	Shaft, 15 tooth w/auxiliary drive, extended	1
	J020	13-28		11095327	End cap, CW, radial ports, DL, gen. 2, JRR	1
	J020	13-28		11086919	End cap, CCW, radial ports, DL, gen. 2, JRL	1
	J030	13-28		5000181 (9007314-1210)	Screw	4
	J050	13-28		9004700-1907	Pin	1
	J080	13-28		4570210	Flange adapter, B pad	1
	J090	13-28		5000099 (9004100-1550)	O-ring	1
	J095	13-28		545434 (9004100-0420)	O-ring	1
	J100	13-28		5000489	Screw	4
	J110	13-28		4460370	Cover plate	1
	J120	13-28		9004104-0440	O-ring	1
	J130	13-28		9007200-5021	Screw	2
	J140	13-28		1701187	Coupling, 13 tooth	1
	J150	13-28		4800754	Lifting bracket	1
	J155	13-28		9007315-0604	Screw	1

Shaft, auxiliary flange and end cap

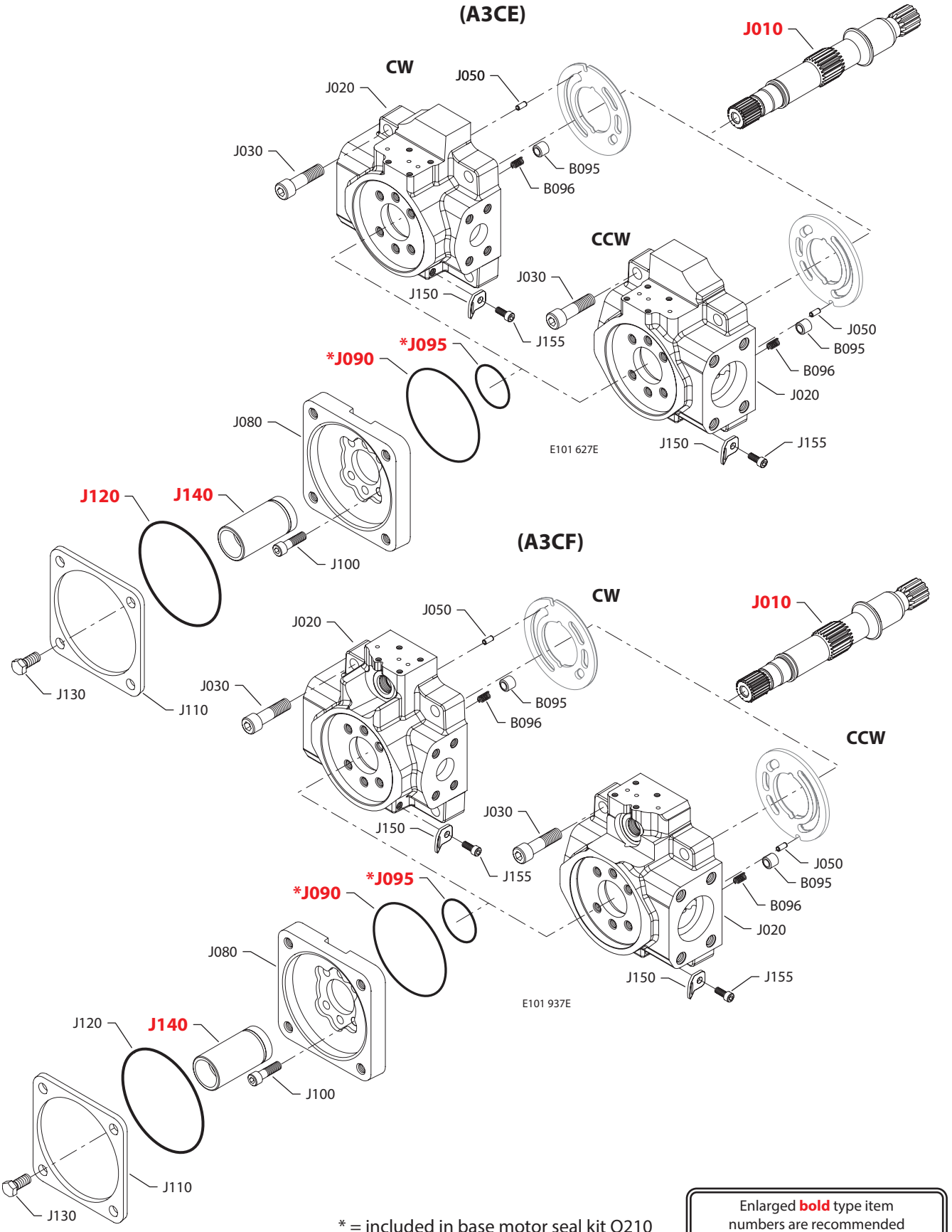

* = included in base motor seal kit Q210

Enlarged **bold** type item numbers are recommended part to stock for servicing.

Shaft, auxiliary flange and end cap

Shaft/auxiliary flange/end cap

Order code	Item	Date begin	Date end	Part number	Part name	Qty. per model/kit
A3CE	B095	13-28		1700256	Check valve poppet	1
	B096	13-28		1700257	Check valve spring	1
	J010	13-28		11130194	Shaft, 15 tooth w/auxiliary drive, extended	1
	J020	13-28		11092368	End cap, CW, radial ports, gen. 2, JRR	1
	J020	13-28		11086934	End cap, CCW, radial ports, gen. 2, JRL	1
	J030	13-28		5000181 (9007314-1210)	Screw	4
	J050	13-28		9004700-1907	Pin	1
	J080	13-28		11039356	Flange adapter, C pad	1
	J090	13-28		5000099 (9004100-1550)	O-ring	1
	J095	13-28		545434 (9004100-0420)	O-ring	1
	J100	13-28		5000489	Screw	6
	J110	13-28		8800406	Cover plate	1
	J120	13-28		9004100-0480	O-ring	1
	J130	13-28		9007200-5021	Screw	4
	J140	13-28		4570133	Coupling, 14 tooth	1
	J150	13-28		4800754	Lifting bracket	1
	J155	13-28		9007315-0604	Screw	1
A3CF	B095	13-28		1700256	Check valve poppet	1
	B096	13-28		1700257	Check valve spring	1
	J010	13-28		11130194	Shaft, 15 tooth w/auxiliary drive, extended	1
	J020	13-28		11095327	End cap, CW, radial ports, DL, gen. 2, JRR	1
	J020	13-28		11086919	End cap, CCW, radial ports, DL, gen. 2, JRL	1
	J030	13-28		5000181 (9007314-1210)	Screw	4
	J050	13-28		9004700-1907	Pin	1
	J080	13-28		11039356	Flange adapter, C pad	1
	J090	13-28		5000099 (9004100-1550)	O-ring	1
	J095	13-28		545434 (9004100-0420)	O-ring	1
	J100	13-28		5000489	Screw	4
	J110	13-28		8800406	Cover plate	1
	J120	13-28		9004104-0480	O-ring	1
	J130	13-28		9007200-5021	Screw	2
	J140	13-28		4570133	Coupling, 14 tooth	1
	J150	13-28		4800754	Lifting bracket	1
	J155	13-28		9007315-0604	Screw	1

Shaft, auxiliary flange and end cap

(A3N7)

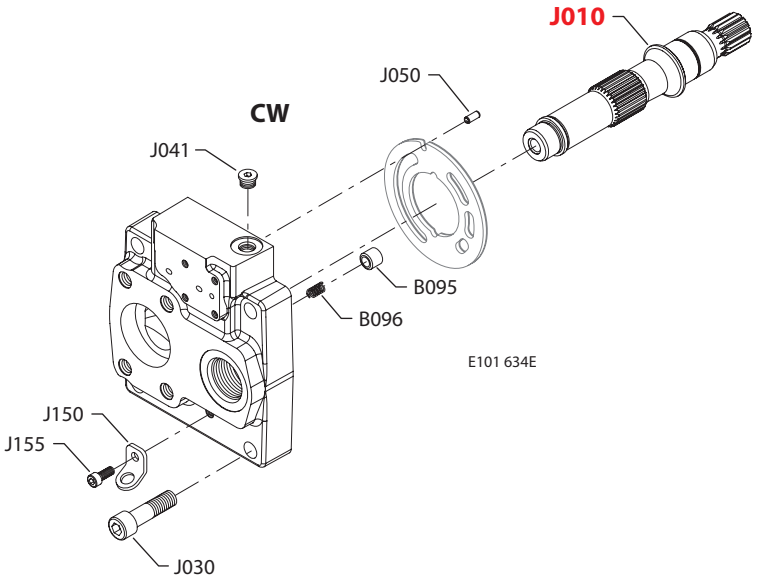

(A3N9)

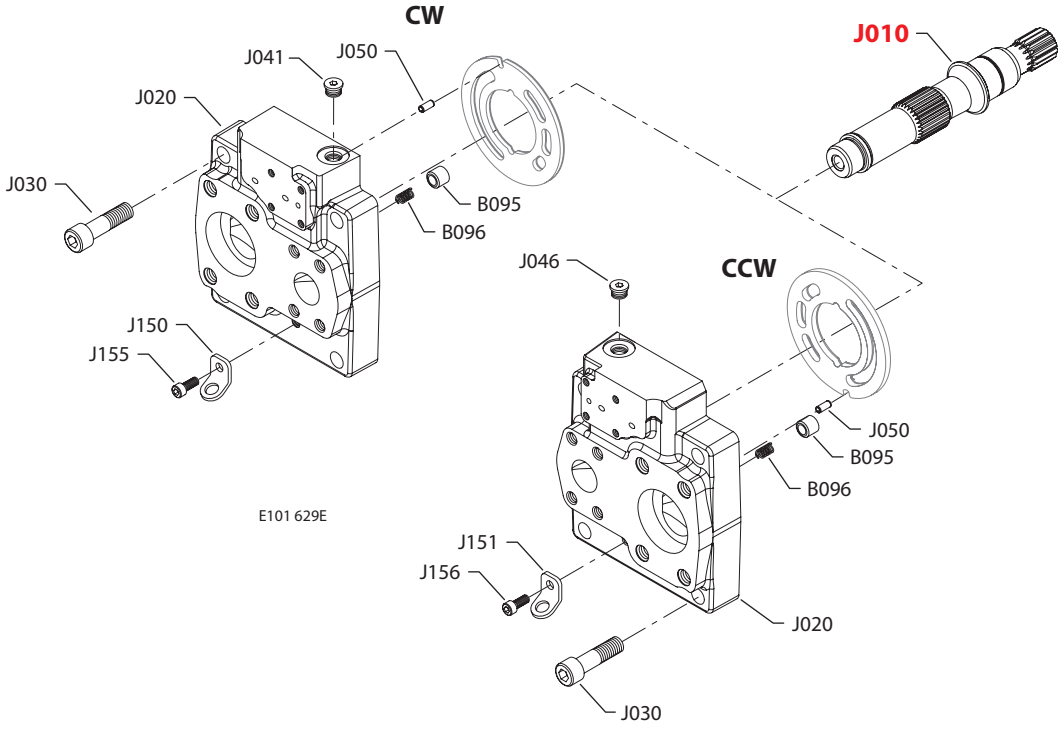

Shaft, auxiliary flange and end cap

Shaft/auxiliary flange/end cap

Order code	Item	Date begin	Date end	Part number	Part name	Qty. per model/kit
A3N7	B095	08-25		1700256	Check valve poppet	1
	B096	08-25		1700257	Check valve spring	1
	J010	08-25		11036827	Shaft, 15 tooth, without auxiliary drive, extended	1
	J020	08-25		11086967	End cap, CW, axial ports, gen. 2, JRR	1
	J030	08-25		5000181 (9007314-1210)	Screw	4
	J041	08-25		140644 (9005110-5600)	Plug assembly, JRR	1
	J050	08-25		9004700-1907	Pin	1
	J150	08-25		4800754	Lifting bracket	1
	J155	08-25		9007315-0604	Screw	1
A3N9	B095	13-28		1700256	Check valve poppet	1
	B096	13-28		1700257	Check valve spring	1
	J010	13-28		11036827	Shaft, 15 tooth, without auxiliary drive, extended	1
	J020	13-28		11095294	End cap, CW, axial ports, gen. 2, JRR	1
	J020	13-28		11095297	End cap, CCW, axial ports, gen. 2, JRL	1
	J030	13-28		5000181 (9007314-1210)	Screw	4
	J041	13-28		140644 (9005110-5600)	Plug assembly, JRR	1
	J046	13-28		140644 (9005110-5600)	Plug assembly, JRL	1
	J050	13-28		9004700-1907	Pin	1
	J150	13-28		4800754	Lifting bracket, JRR	1
	J151	13-28		4800754	Lifting bracket, JRL	1
	J155	13-28		9007315-0604	Screw, JRR	1
	J156	13-28		9007315-0604	Screw, JRL	1

Shaft, auxiliary flange and end cap

(A3NE)

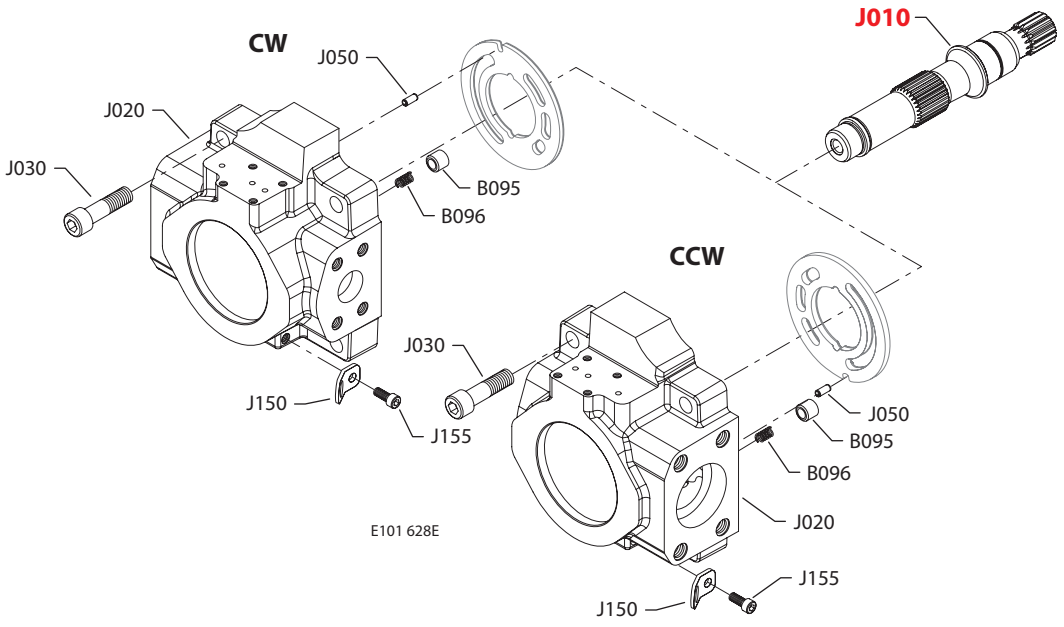

(A3NH)

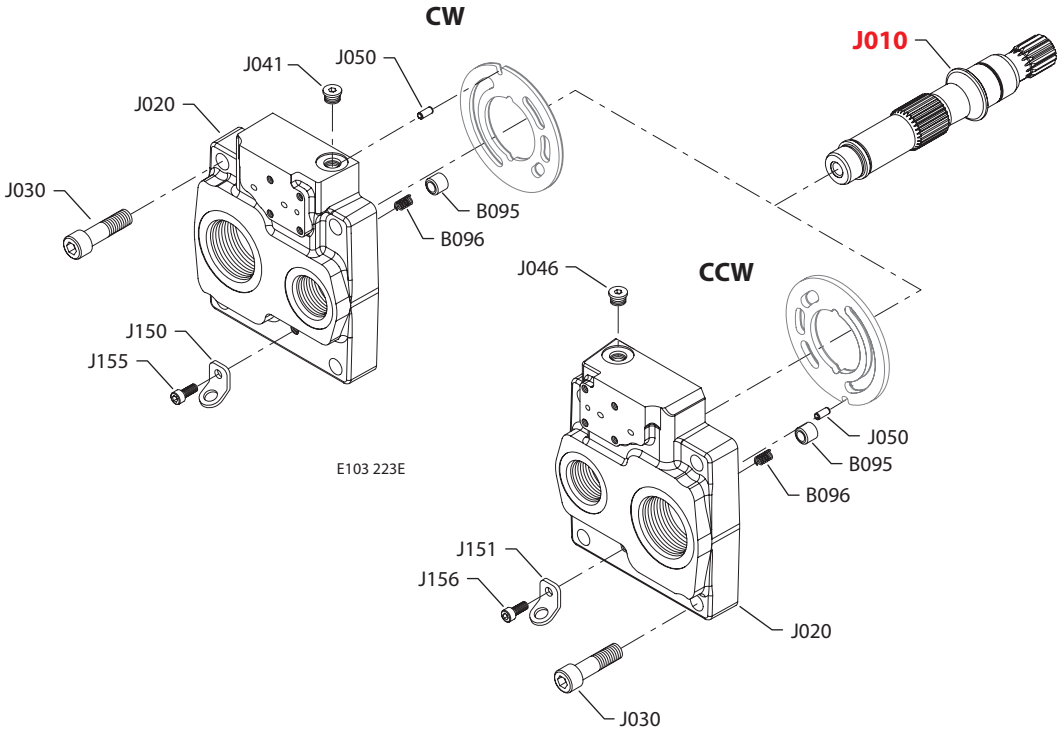

* = included in base motor seal kit Q210

Enlarged **bold** type item numbers are recommended part to stock for servicing.

Shaft, auxiliary flange and end cap

Shaft/auxiliary flange/end cap

Order code	Item	Date begin	Date end	Part number	Part name	Qty. per model/kit
A3NE	B095	13-28		1700256	Check valve poppet	1
	B096	13-28		1700257	Check valve spring	1
	J010	13-28		11036827	Shaft, 15 tooth, without auxiliary drive, extended	1
	J020	13-28		11095323	End cap, CW, radial ports, gen. 2, JRR	1
	J020	13-28		11082641	End cap, CCW, radial ports, gen. 2, JRL	1
	J030	13-28		5000181 (9007314-1210)	Screw	4
	J050	13-28		9004700-1907	Pin	1
	J150	13-28		4800754	Lifting bracket	1
	J155	13-28		9007315-0604	Screw	1
A3NH	B095	11-47		1700256	Check valve poppet	1
	B096	11-47		1700257	Check valve spring	1
	J010	11-47		11036827	Shaft, 15 tooth, without auxiliary drive, extended	1
	J020	11-47		11095295	End cap, CW, axial ports, gen. 2, JRR	1
	J020	11-47		11095298	End cap, CCW, axial ports, gen. 2, JRL	1
	J030	11-47		5000181 (9007314-1210)	Screw	4
	J041	11-47		140644 (9005110-5600)	Plug assembly	1
	J046	11-47		140644 (9005110-5600)	Plug assembly	1
	J050	11-47		9004700-1907	Pin	1
	J150	11-47		4800754	Lifting bracket	1
	J151	11-47		4800754	Lifting bracket	1
	J155	11-47		9007315-0604	Screw	1
	J156	11-47		9007315-0604	Screw	1

Shaft, auxiliary flange and end cap

(A3NV)

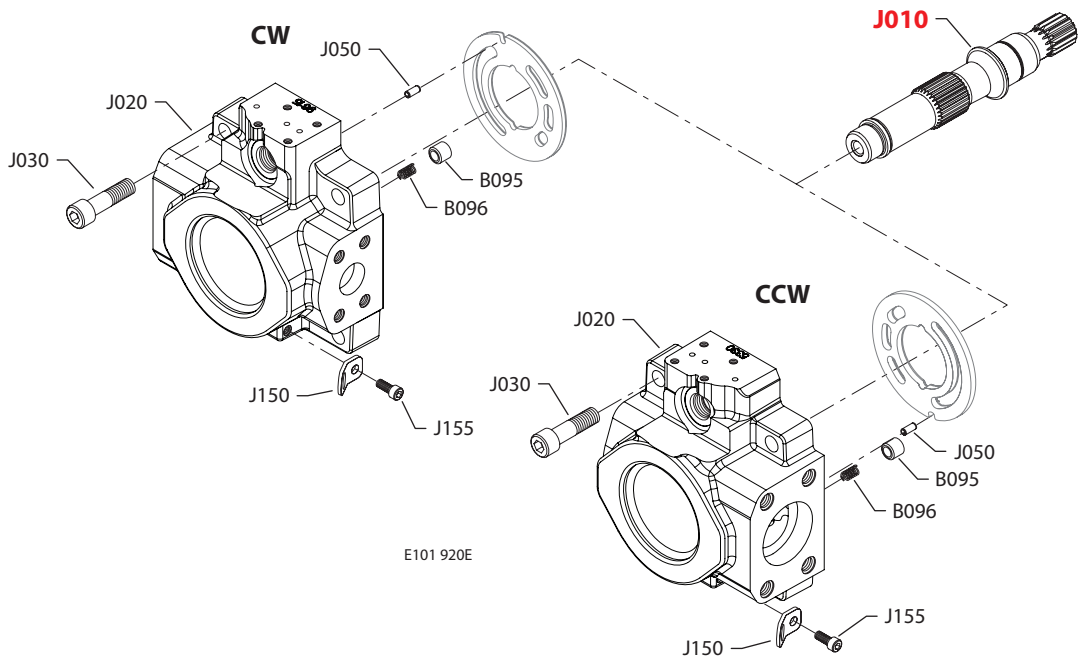

(A3NZ)

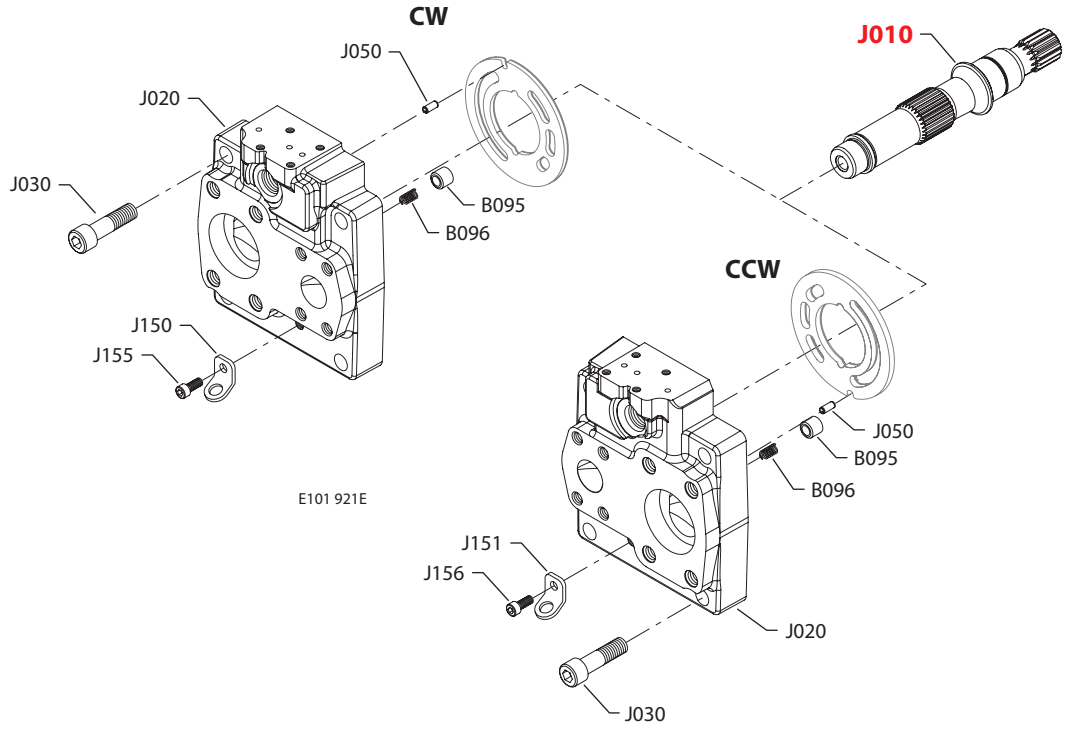

* = included in base motor seal kit Q210

Enlarged **bold** type item numbers are recommended part to stock for servicing.

Shaft, auxiliary flange and end cap

Shaft/auxiliary flange/end cap

Order code	Item	Date begin	Date end	Part number	Part name	Qty. per model/kit
A3NV	B095	13-28		1700256	Check valve poppet	1
	B096	13-28		1700257	Check valve spring	1
	J010	13-28		11036827	Shaft, 15 tooth, without auxiliary drive, extended	1
	J020	13-28		11099615	End cap, CW, axial ports, gen. 2, JRR	1
	J020	13-28		11095330	End cap, CCW, axial ports, gen. 2, JRL	1
	J030	13-28		5000181 (9007314-1210)	Screw	4
	J050	13-28		9004700-1907	Pin	1
	J150	13-28		4800754	Lifting bracket	1
	J155	13-28		9007315-0604	Screw	1
A3NZ	B095	13-28		1700256	Check valve poppet	1
	B096	13-28		1700257	Check valve spring	1
	J010	13-28		11036827	Shaft, 15 tooth, without auxiliary drive, extended	1
	J020	13-28		11095296	End cap, CW, axial ports, DL, gen. 2, JRR	1
	J020	13-28		11095299	End cap, CCW, axial ports, DL, gen. 2, JRL	1
	J030	13-28		5000181 (9007314-1210)	Screw	4
	J050	13-28		9004700-1907	Pin	1
	J150	13-28		4800754	Lifting bracket, JRR	1
	J151	13-28		4800754	Lifting bracket, JRL	1
	J155	13-28		9007315-0604	Screw, JRR	1
	J156	13-28		9007315-0604	Screw, JRL	1

Shaft, auxiliary flange and end cap

(A3RE)

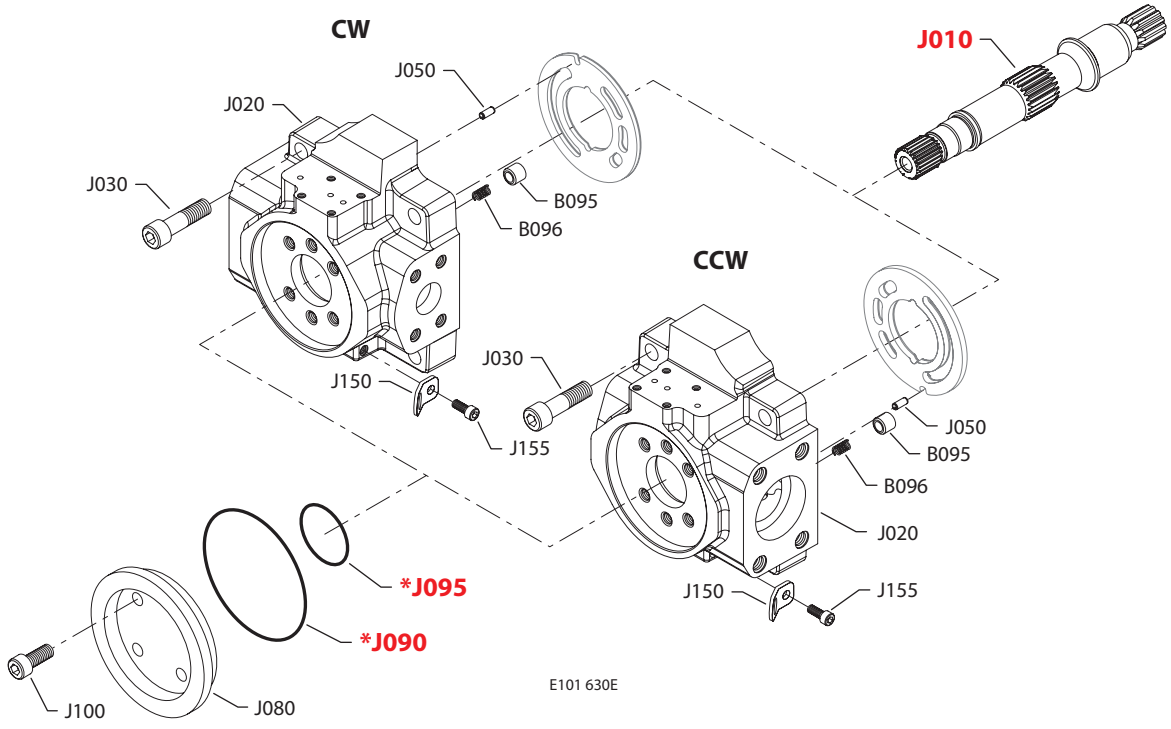

(A3RF)

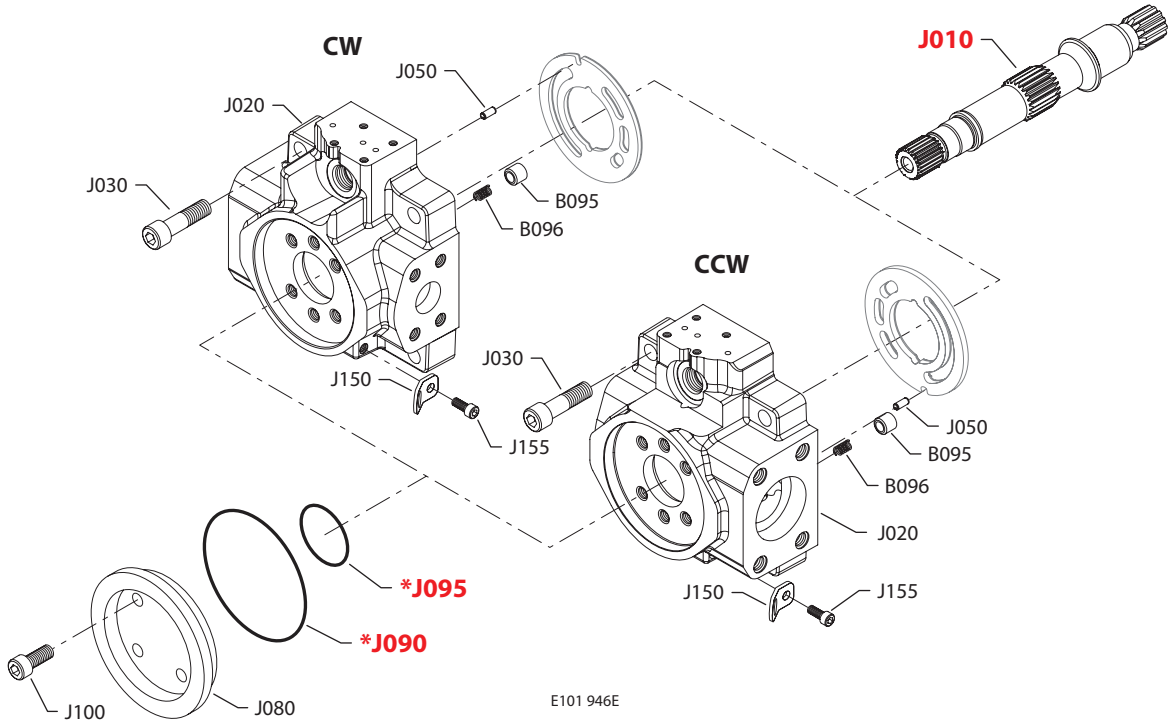

* = included in base motor seal kit Q210

Enlarged **bold** type item numbers are recommended part to stock for servicing.

Shaft, auxiliary flange and end cap

Shaft/auxiliary flange/end cap

Order code	Item	Date begin	Date end	Part number	Part name	Qty. per model/kit
A3RE	B095	13-28		1700256	Check valve poppet	1
	B096	13-28		1700257	Check valve spring	1
	J010	13-28		11130194	Shaft, 15 tooth w/auxiliary drive, extended	1
	J020	13-28		11092368	End cap, CW, radial ports, gen. 2, JRR	1
	J020	13-28		11086934	End cap, CCW, radial ports, gen. 2, JRRL	1
	J030	13-28		5000181 (9007314-1210)	Screw	4
	J050	13-28		9004700-1907	Pin	1
	J080	13-28		4570179	Running cover	1
	J090	13-28		5000099 (9004100-1550)	O-ring	1
	J095	13-28		545434 (9004104-0310)	O-ring	1
	J100	13-28		5000489	Screw	4
	J150	13-28		4800754	Lifting bracket	1
	J155	13-28		9007315-0604	Screw	1
A3RF	B095	13-28		1700256	Check valve poppet	1
	B096	13-28		1700257	Check valve spring	1
	J010	11-47		11130194	Shaft, 15 tooth w/auxiliary drive, extended	1
	J020	11-47		11095327	End cap, CW, radial ports, DL, gen. 2, JRR	1
	J020	11-47		11086919	End cap, CCW, radial ports, DL, gen. 2, JRL	1
	J030	11-47		5000181 (9007314-1210)	Screw	4
	J050	11-47		9004700-1907	Pin	1
	J080	11-47		4570179	Running cover	1
	J090	11-47		5000099 (9004100-1550)	O-ring	1
	J095	11-47		545434 (9004104-0310)	O-ring	1
	J100	11-47		5000489	Screw	4
	J150	11-47		4800754	Lifting bracket	1
	J155	11-47		9007315-0604	Screw	1

Shaft, auxiliary flange and end cap

(A3TE)

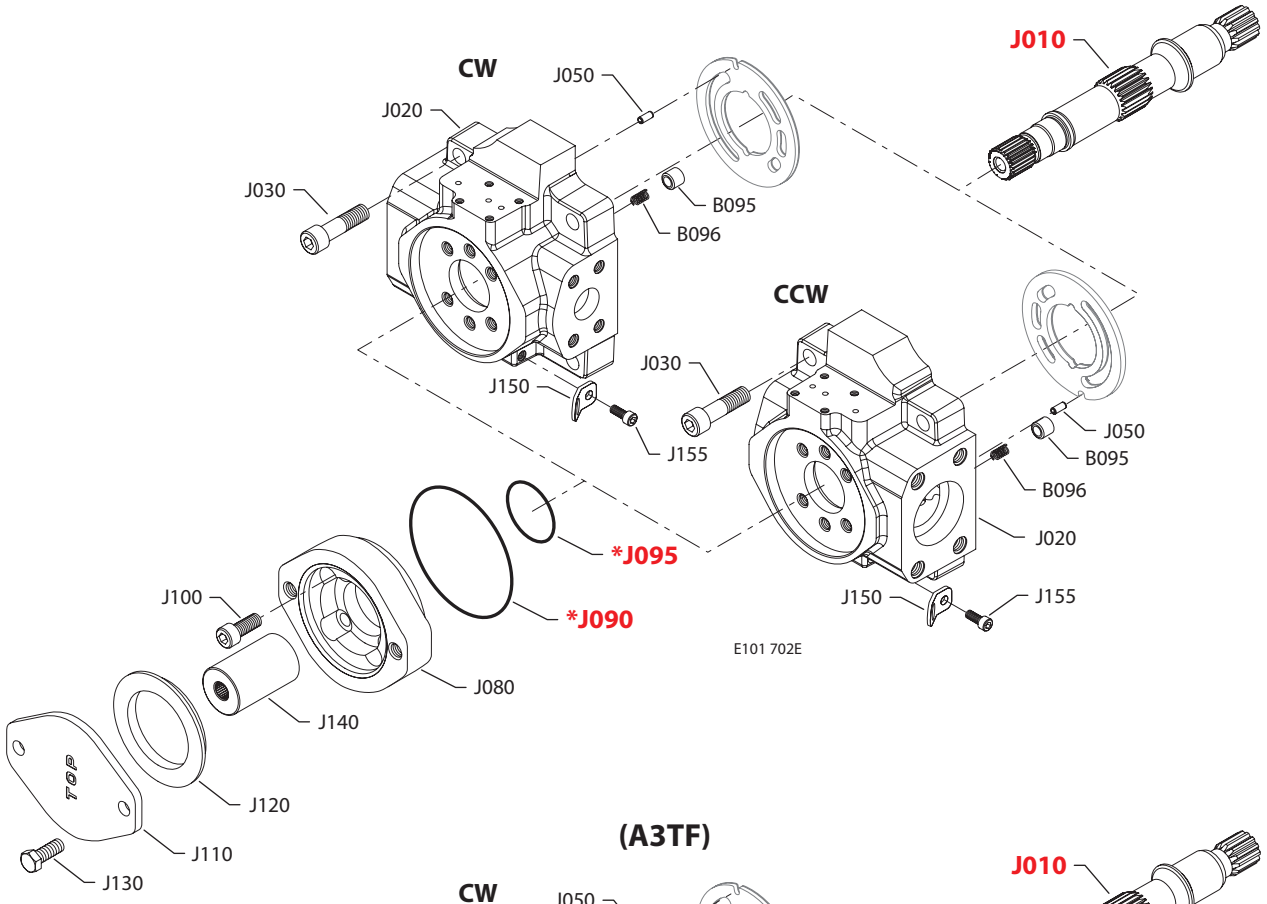

E101 702E

(A3TF)

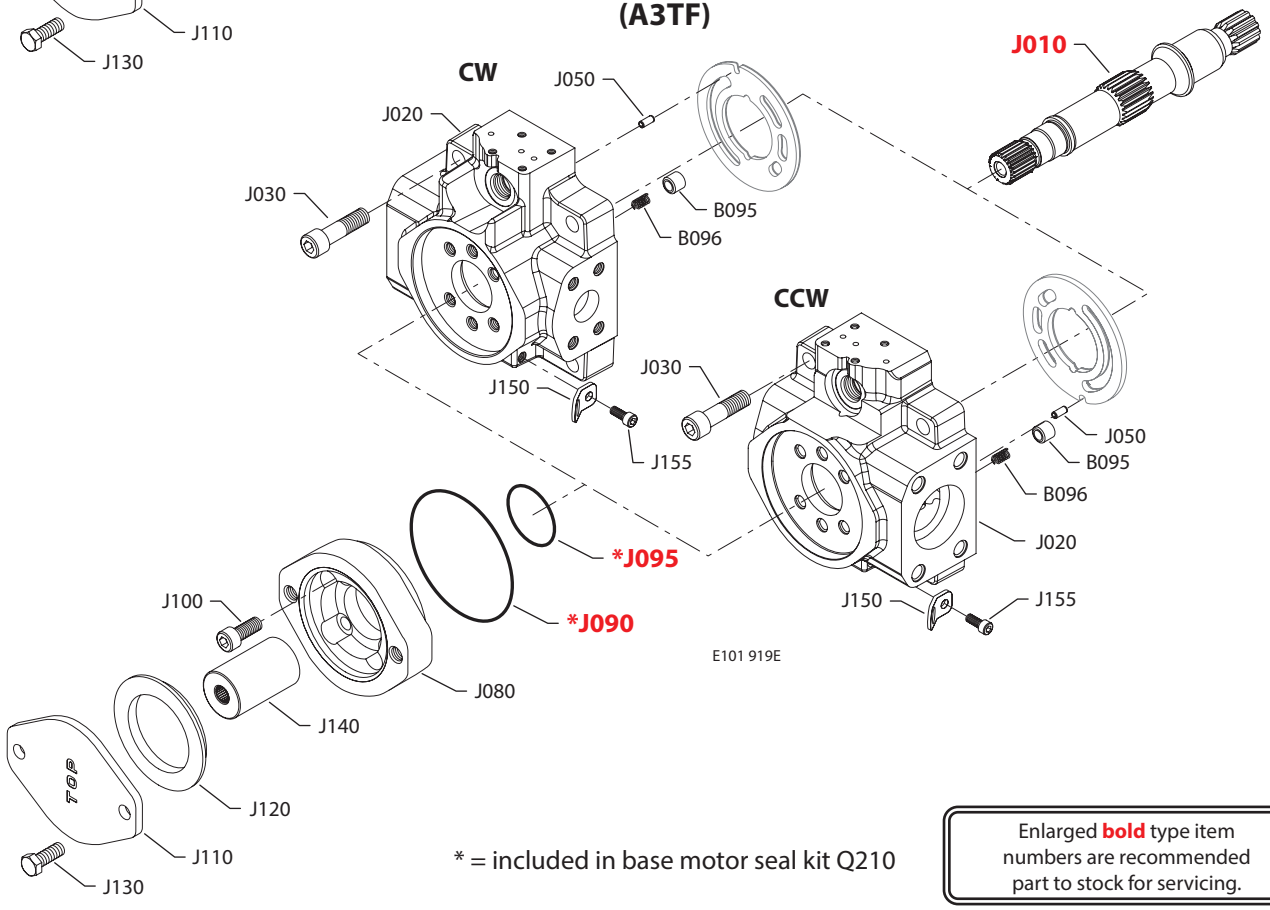

E101 919E

* = included in base motor seal kit Q210

Enlarged **bold** type item numbers are recommended part to stock for servicing.

Shaft, auxiliary flange and end cap

Shaft/auxiliary flange/end cap

Order code	Item	Date begin	Date end	Part number	Part name	Qty. per model/kit
A3TE	B095	13-28		1700256	Check valve poppet	1
	B096	13-28		1700257	Check valve spring	1
	J010	13-28		11130194	Shaft, 15 tooth w/auxiliary drive, extended	1
	J020	13-28		11092368	End cap, CW, radial ports, gen. 2, JRR	1
	J020	13-28		11086934	End cap, CCW, radial ports, gen. 2, JRL	1
	J030	13-28		5000181 (9007314-1210)	Screw	4
	J050	13-28		9004700-1907	Pin	1
	J080	13-28		4570289	Flange adapter, A pad	1
	J090	13-28		5000099 (9004100-1550)	O-ring	1
	J095	13-28		545434 (9004100-0420)	O-ring	1
	J100	13-28		5000489	Screw	4
	J110	13-28		4460586	Cover plate	1
	J120	13-28		4800482	A pad seal	1
	J130	13-28		9007200-3712	Screw	2
	J140	13-28		1701186	Coupling, 11 tooth	1
	J150	13-28		4800754	Lifting bracket	1
	J155	13-28		9007315-0604	Screw	1
A3TF	B095	13-28		1700256	Check valve poppet	1
	B096	13-28		1700257	Check valve spring	1
	J010	13-28		11130194	Shaft, 15 tooth w/auxiliary drive, extended	1
	J020	13-28		11095327	End cap, CW, radial ports, DL, gen. 2, JRR	1
	J020	13-28		11086919	End cap, CCW, radial ports, DL, gen. 2, JRL	1
	J030	13-28		5000181 (9007314-1210)	Screw	4
	J050	13-28		9004700-1907	Pin	1
	J080	13-28		4570289	Flange adapter, A pad	1
	J090	13-28		5000099 (9004100-1550)	O-ring	1
	J095	13-28		545434 (9004100-0420)	O-ring	1
	J100	13-28		5000489	Screw	4
	J110	13-28		4460586	Cover plate	1
	J120	13-28		4800482	A pad seal	1
	J130	13-28		9007200-3712	Screw	2
	J140	13-28		1701186	Coupling, 11 tooth	1
	J150	13-28		4800754	Lifting bracket	1
	J155	13-28		9007315-0604	Screw	1

Shaft, auxiliary flange and end cap

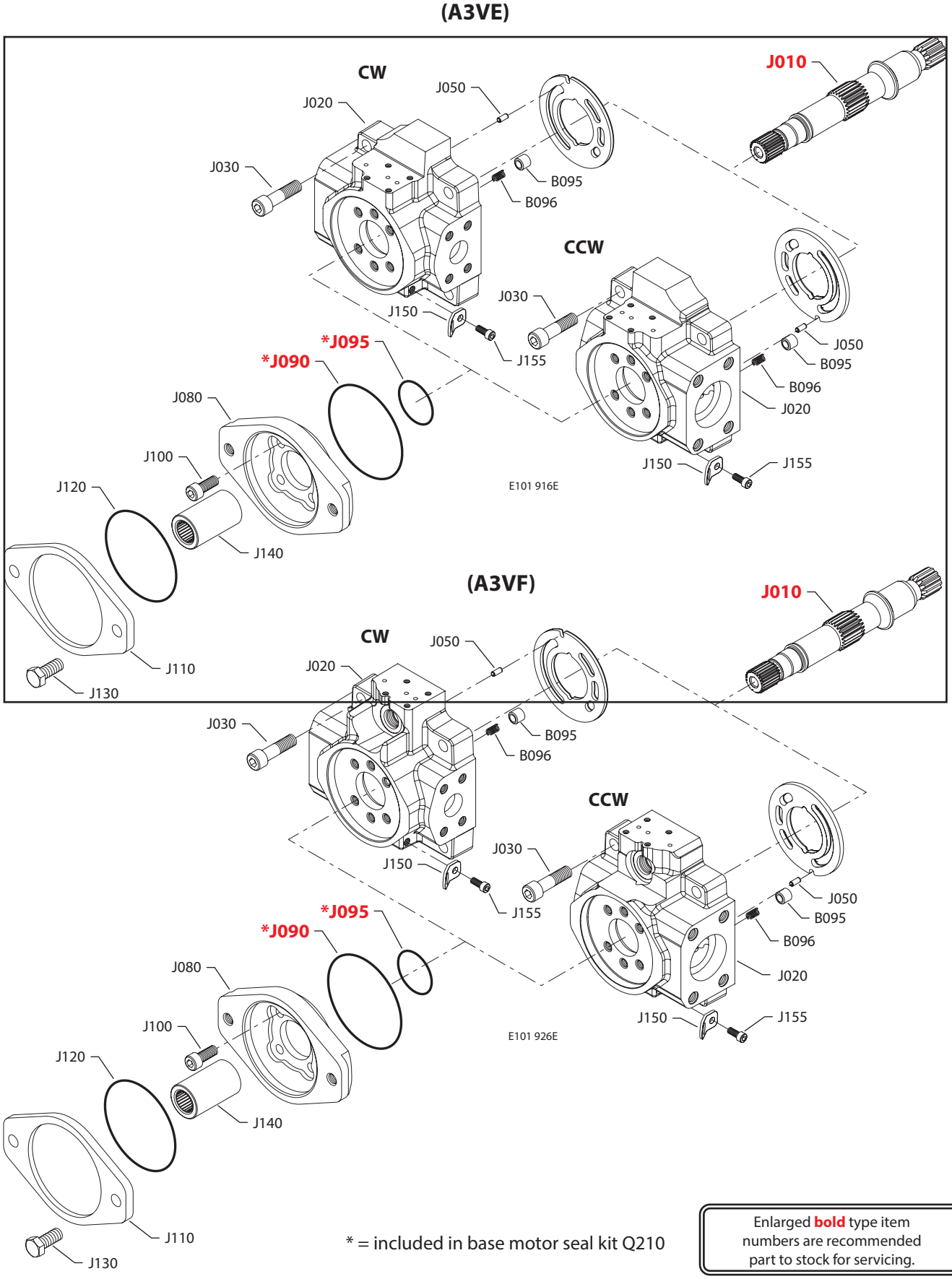

* = included in base motor seal kit Q210

Enlarged **bold** type item numbers are recommended part to stock for servicing.

Shaft, auxiliary flange and end cap

Shaft/auxiliary flange/end cap

Order code	Item	Date begin	Date end	Part number	Part name	Qty. per model/kit
A3VE	B095	13-28		1700256	Check valve poppet	1
	B096	13-28		1700257	Check valve spring	1
	J010	13-28		11130194	Shaft, 15 tooth w/auxiliary drive, extended	1
	J020	13-28		11092368	End cap, CW, radial ports, gen. 2, JRR	1
	J020	13-28		11086934	End cap, CCW, radial ports, gen. 2, JRL	1
	J030	13-28		5000181 (9007314-1210)	Screw	4
	J050	13-28		9004700-1907	Pin	1
	J080	13-28		4570210	Flange adapter, B pad	1
	J090	13-28		5000099 (9004100-1550)	O-ring	1
	J095	13-28		545434 (9004100-0420)	O-ring	1
	J100	13-28		5000489	Screw	4
	J110	13-28		4460370	Cover plate	1
	J120	13-28		9004104-0440	O-ring	1
	J130	13-28		9007200-5021	Screw	2
	J140	13-28		1701188	Coupling, 15 tooth	1
	J150	13-28		4800754	Lifting bracket	1
	J155	13-28		9007315-0604	Screw	1
A3VF	B095	13-28		1700256	Check valve poppet	1
	B096	13-28		1700257	Check valve spring	1
	J010	13-28		11130194	Shaft, 15 tooth w/auxiliary drive, extended	1
	J020	13-28		11095327	End cap, CW, radial ports, DL, gen. 2, JRR	1
	J020	13-28		11086919	End cap, CCW, radial ports, DL, gen. 2, JRL	1
	J030	13-28		5000181 (9007314-1210)	Screw	4
	J050	13-28		9004700-1907	Pin	1
	J080	13-28		4570210	Flange adapter, B pad	1
	J090	13-28		5000099 (9004100-1550)	O-ring	1
	J095	13-28		545434 (9004100-0420)	O-ring	1
	J100	13-28		5000489	Screw	4
	J110	13-28		4460370	Cover plate	1
	J120	13-28		9004104-0440	O-ring	1
	J130	13-28		9007200-5021	Screw	2
	J140	13-28		1701188	Coupling, 15 tooth	1
	J150	13-28		4800754	Lifting bracket	1
	J155	13-28		9007315-0604	Screw	1

Shaft, auxiliary flange and end cap

(C2A2)

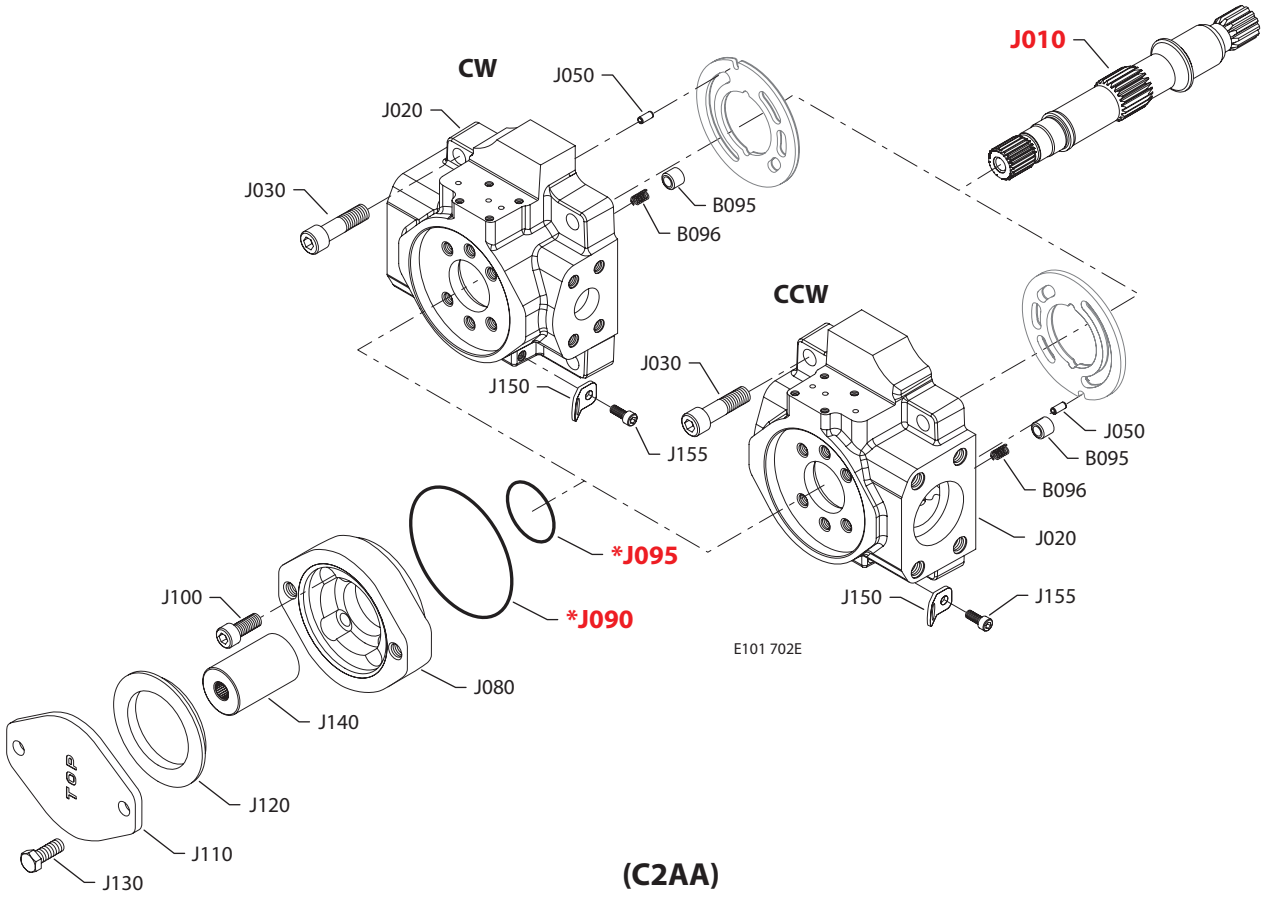

(C2AA)

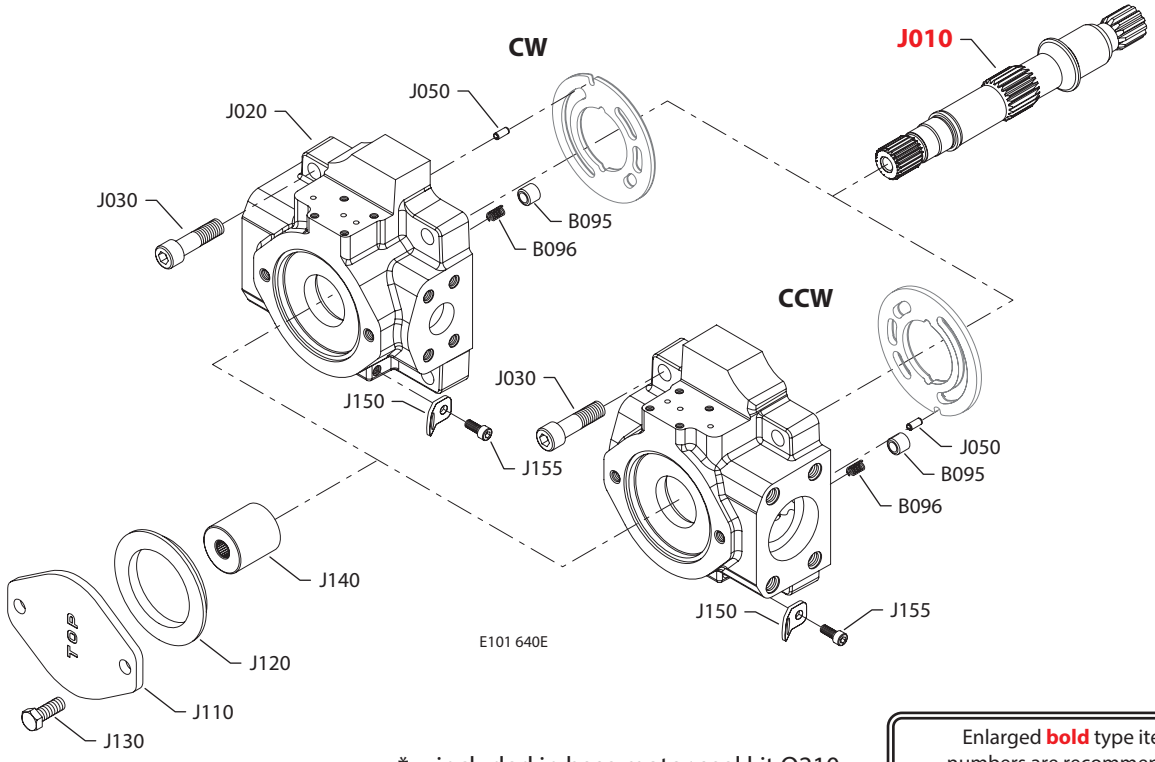

* = included in base motor seal kit Q210

Enlarged **bold** type item numbers are recommended part to stock for servicing.

Shaft, auxiliary flange and end cap

Shaft/auxiliary flange/end cap

Order code	Item	Date begin	Date end	Part number	Part name	Qty. per model/kit
C2A2	B095	08-04	15-34	1700256	Check valve poppet	1
	B096	08-04	15-34	1700257	Check valve spring	1
	J010	08-04	15-34	1700648	Shaft, 13 tooth w/auxiliary drive	1
	J020	08-04	15-34	11077600	End cap, CW, radial ports, gen. 1, JRR (SB-2010-002)	1
	J020	08-04	15-34	11077606	End cap, CCW, radial ports, gen. 1, JRL (SB-2010-002)	1
	J030	08-04	15-34	5000181 (9007314-1210)	Screw	4
	J050	08-04	15-34	9004700-1907	Pin	1
	J080	08-04	15-34	4570289	Flange adapter, A pad	1
	J090	08-04	15-34	5000099 (9004100-1550)	O-ring	1
	J095	08-04	15-34	545434 (9004100-0420)	O-ring	1
	J100	08-04	15-34	5000489	Screw	4
	J110	08-04	15-34	4460586	Cover plate	1
	J120	08-04	15-34	4800482	A pad seal	1
	J130	08-04	15-34	9007200-3712	Screw	2
	J140	08-04	15-34	1701185	Coupling, 9 tooth	1
	J150	08-04	15-34	4800754	Lifting bracket	1
	J155	08-04	15-34	9007315-0604	Screw	1
C2AA	B095	03-23	15-37	1700256	Check valve poppet	1
	B096	03-23	15-37	1700257	Check valve spring	1
	J010	03-23	15-37	1700648	Shaft, 13 tooth w/auxiliary drive	1
	J020	03-23	15-37	11077601	End cap, CW, radial ports, gen. 1, JRR (SB-2010-002)	1
	J020	03-23	15-37	11077607	End cap, CCW, radial ports, gen. 1, JRL (SB-2010-002)	1
	J030	03-23	15-37	5000181 (9007314-1210)	Screw	4
	J050	03-23	15-37	9004700-1907	Pin	1
	J110	03-23	15-37	4460586	Cover plate	1
	J120	03-23	15-37	4800482	A pad seal	1
	J130	03-23	15-37	9007200-3712	Screw	2
	J140	03-23	15-37	4570356	Coupling, 9 tooth, short	1
	J150	03-23	15-37	4800754	Lifting bracket	1
	J155	03-23	15-37	9007315-0604	Screw	1

Shaft, auxiliary flange and end cap

(C2AE)

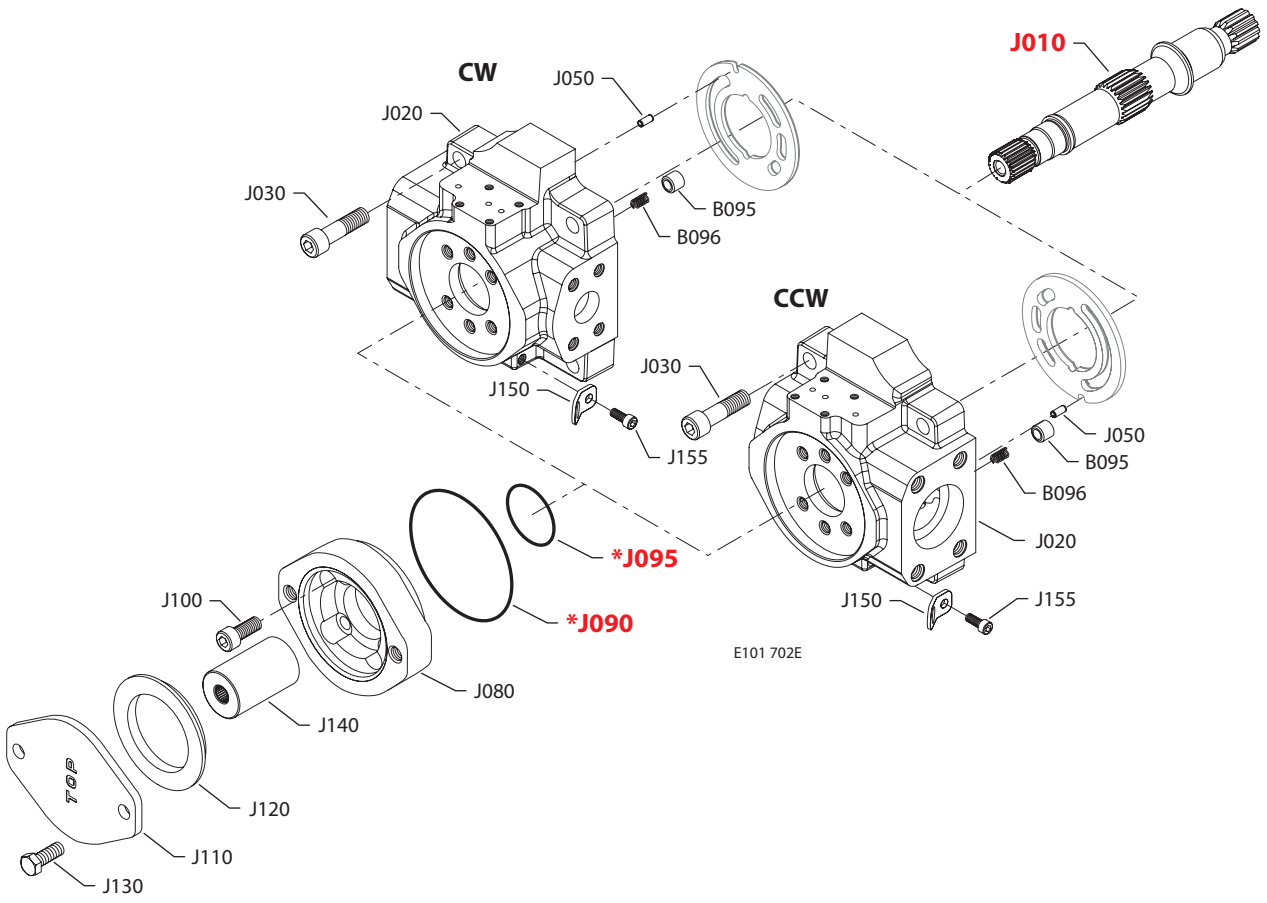

(C2AX)

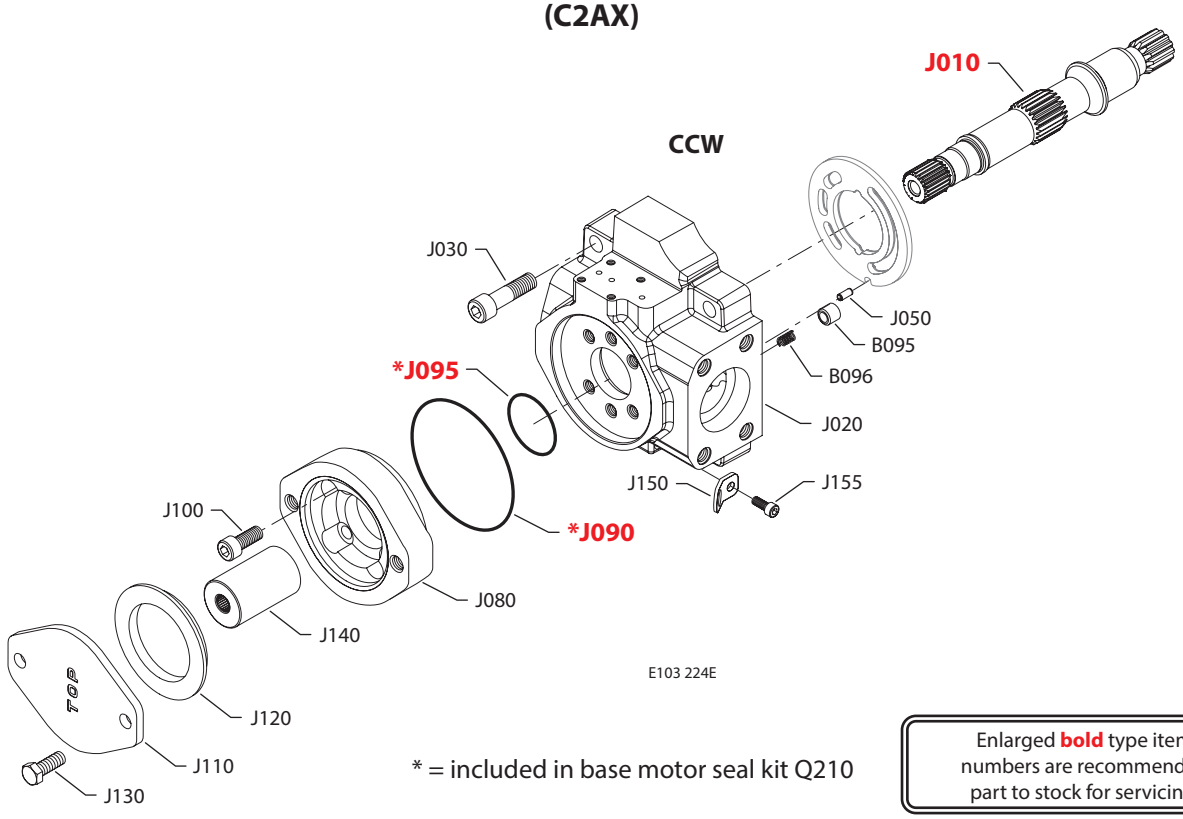

* = included in base motor seal kit Q210

Enlarged **bold** type item numbers are recommended part to stock for servicing.

Shaft, auxiliary flange and end cap

Shaft/auxiliary flange/end cap

Order code	Item	Date begin	Date end	Part number	Part name	Qty. per model/kit
C2AE	B095	08-25		1700256	Check valve poppet	1
	B096	08-25		1700257	Check valve spring	1
	J010	08-25		1700648	Shaft, 13 tooth with auxiliary drive	1
	J020	08-25		11092368	End cap, CW, radial ports, gen. 2 JRR	1
	J020	08-25		11086934	End cap, CCW, radial ports, gen. 2, JRL	1
	J030	08-25		5000181 (9007314-1210)	Screw	4
	J050	08-25		9004700-1907	Pin	1
	J080	08-25		4570289	Flange adapter, A pad	1
	J090	08-25		5000099 (9004100-1550)	O-ring	1
	J095	08-25		545434 (9004100-0420)	O-ring	1
	J100	08-25		5000489	Screw	4
	J110	08-25		4460586	Cover plate	1
	J120	08-25		4800482	A pad seal	1
	J130	08-25		9007200-3712	Screw	2
	J140	08-25		1701185	Coupling, 9 tooth	1
	J150	08-25		4800754	Lifting bracket	1
	J155	08-25		9007315-0604	Screw	1
C2AX	B095	08-25		1700256	Check valve poppet	1
	B096	08-25		1700257	Check valve spring	1
	J010	08-25		1700648	Shaft, 13 tooth with auxiliary drive	1
	J020	08-25		11106847	End cap, CCW, radial ports, gen. 2, JRL	1
	J030	08-25		5000181 (9007314-1210)	Screw	4
	J050	08-25		9004700-1907	Pin	1
	J080	08-25		4570289	Flange adapter, A pad	1
	J090	08-25		5000099 (9004100-1550)	O-ring	1
	J095	08-25		545434 (9004100-0420)	O-ring	1
	J100	08-25		5000489	Screw	4
	J110	08-25		4460586	Cover plate	1
	J120	08-25		4800482	A pad seal	1
	J130	08-25		9007200-3712	Screw	2
	J140	08-25		1701185	Coupling, 9 tooth	1
	J150	08-25		4800754	Lifting bracket	1
	J155	08-25		9007315-0604	Screw	1

Shaft, auxiliary flange and end cap

(C2AY)

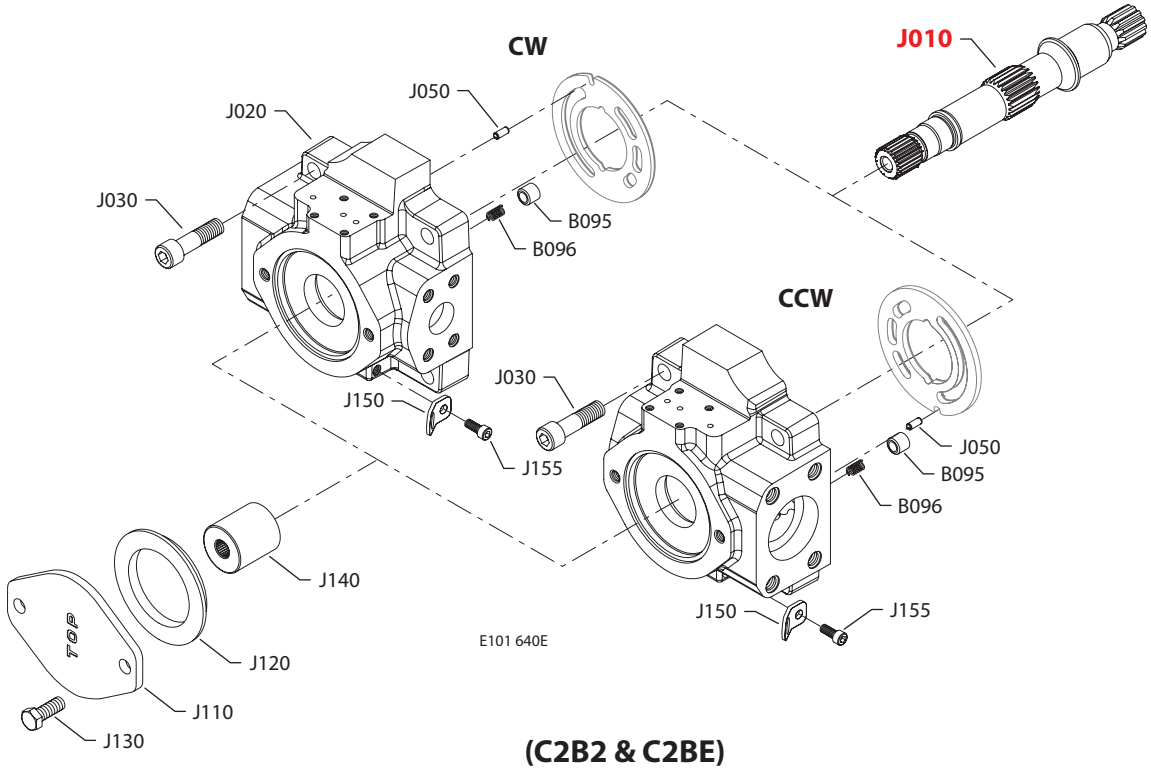

(C2B2 & C2BE)

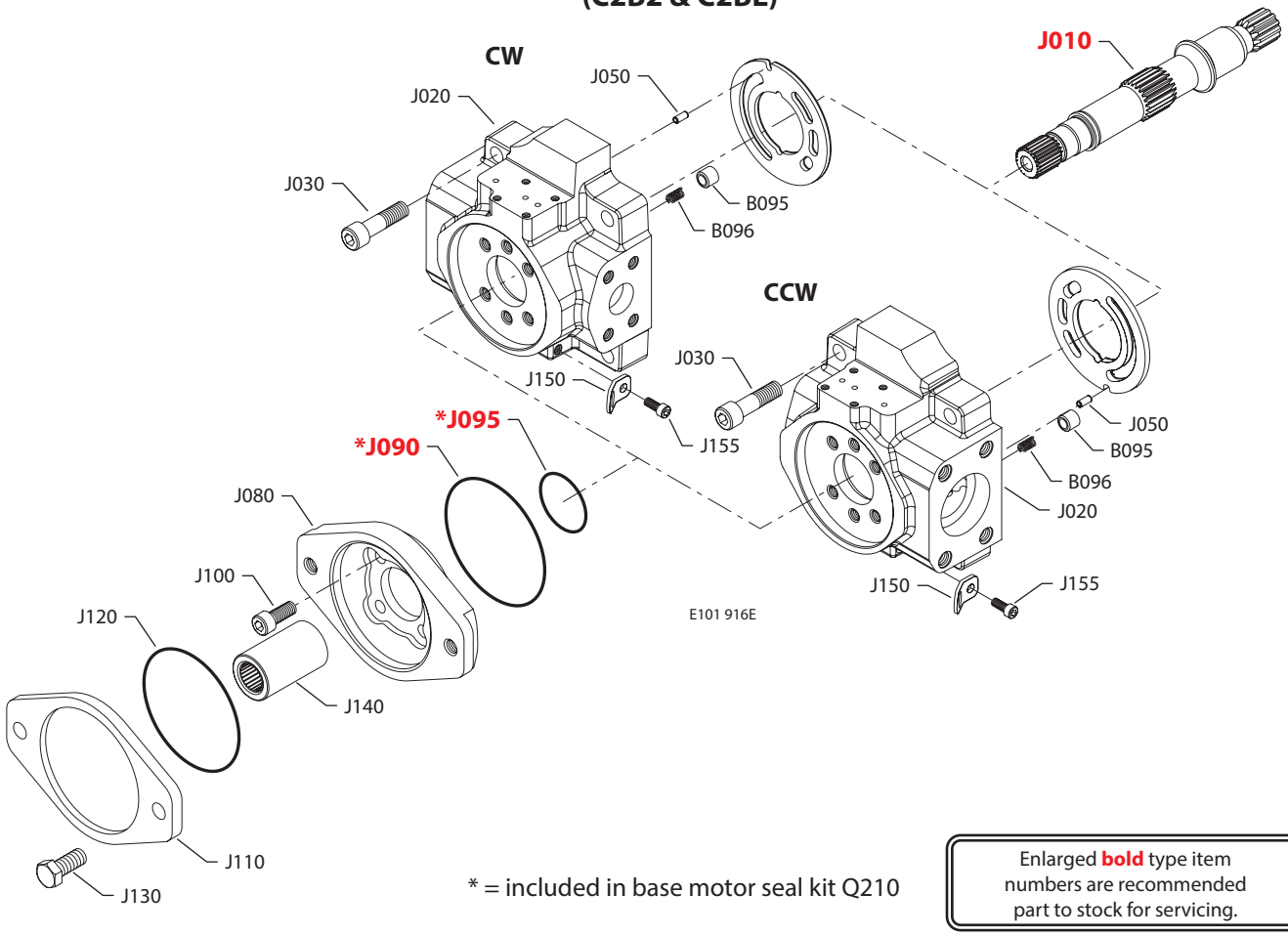

* = included in base motor seal kit Q210

Enlarged **bold** type item numbers are recommended part to stock for servicing.

Shaft, auxiliary flange and end cap

Shaft/auxiliary flange/end cap

Order code	Item	Date begin	Date end	Part number	Part name	Qty. per model/kit
C2AY	B095	08-25		1700256	Check valve poppet	1
	B096	08-25		1700257	Check valve spring	1
	J010	08-25		1700648	Shaft, 13 tooth w/auxiliary drive	1
	J020	08-25		11091564	End cap, CW, radial ports, gen. 2, JRL	1
	J020	08-25		11095329	End cap, CCW, radial ports, gen. 2, JRL	1
	J030	08-25		5000181 (9007314-1210)	Screw	4
	J050	08-25		9004700-1907	Pin	1
	J110	08-25		4460586	Cover plate	1
	J120	08-25		4800482	A pad seal	1
	J130	08-25		9007200-3712	Screw	2
	J140	08-25		4570356	Coupling, 9 tooth, short	1
	J150	08-25		4800754	Lifting bracket	1
	J155	08-25		9007315-0604	Screw	1
C2B2	B095	03-23	15-34	1700256	Check valve poppet	1
	B096	03-23	15-34	1700257	Check valve spring	1
	J010	03-23	15-34	1700648	Shaft, 13 tooth w/auxiliary drive	1
	J020	03-23	15-34	11077600	End cap, CW, radial ports, gen. 1, JRR (SB-2010-002)	1
	J020	03-23	15-34	11077606	End cap, CCW, radial ports, gen. 1, JRL (SB-2010-002)	1
	J030	03-23	15-34	5000181 (9007314-1210)	Screw	4
	J050	03-23	15-34	9004700-1907	Pin	1
	J080	03-23	15-34	4570210	Flange adapter, B pad	1
	J090	03-23	15-34	5000099 (9004100-1550)	O-ring	1
	J095	03-23	15-34	545434 (9004100-0420)	O-ring	1
	J100	03-23	15-34	5000489	Screw	4
	J110	03-23	15-34	4460370	Cover plate	1
	J120	03-23	15-34	9004104-0440	O-ring	1
	J130	03-23	15-34	9007200-5021	Screw	2
	J140	03-23	15-34	1701187	Coupling, 13 tooth	1
	J150	03-23	15-34	4800754	Lifting bracket	1
	J155	03-23	15-34	9007315-0604	Screw	1
C2BE	B095	12-41		1700256	Check valve poppet	1
	B096	12-41		1700257	Check valve spring	1
	J010	12-41		1700648	Shaft, 13 tooth with auxiliary drive	1
	J020	12-41		11092368	End cap, CW, radial ports, gen. 2 JRR	1
	J020	12-41		11086934	End cap, CCW, radial ports, gen. 2, JRL	1
	J030	12-41		5000181 (9007314-1210)	Screw	4
	J050	12-41		9004700-1907	Pin	1
	J080	12-41		4570210	Flange adapter, B pad	1
	J090	12-41		5000099 (9004100-1550)	O-ring	1
	J095	12-41		545434 (9004100-0420)	O-ring	1
	J100	12-41		5000489	Screw	4
	J110	12-41		4460370	Cover plate	1
	J120	12-41		9004104-0440	O-ring	1
	J130	12-41		9007200-5021	Screw	2
	J140	12-41		1701187	Coupling, 13 tooth	1
	J150	12-41		4800754	Lifting bracket	1
	J155	12-41		9007315-0604	Screw	1

Shaft, auxiliary flange and end cap

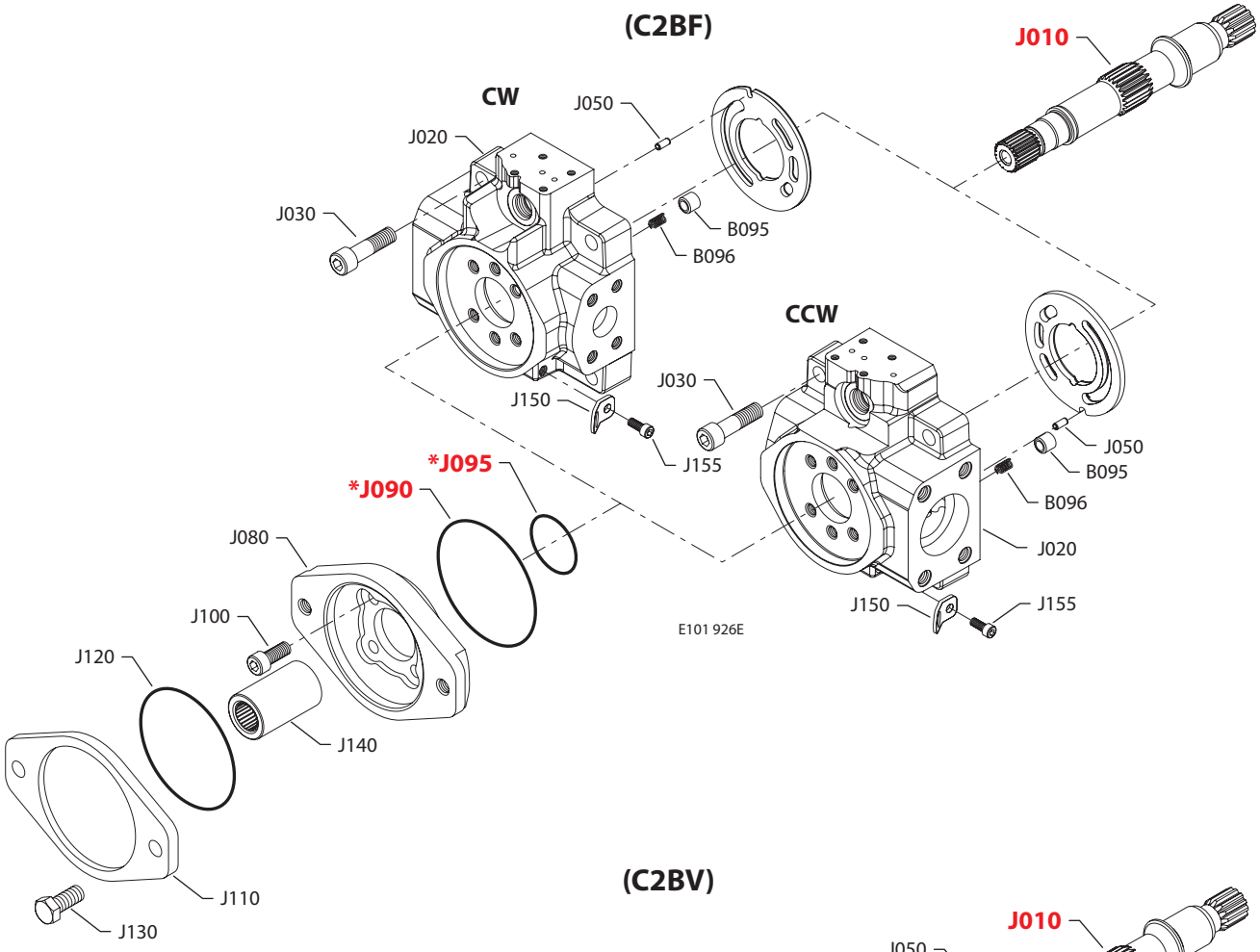

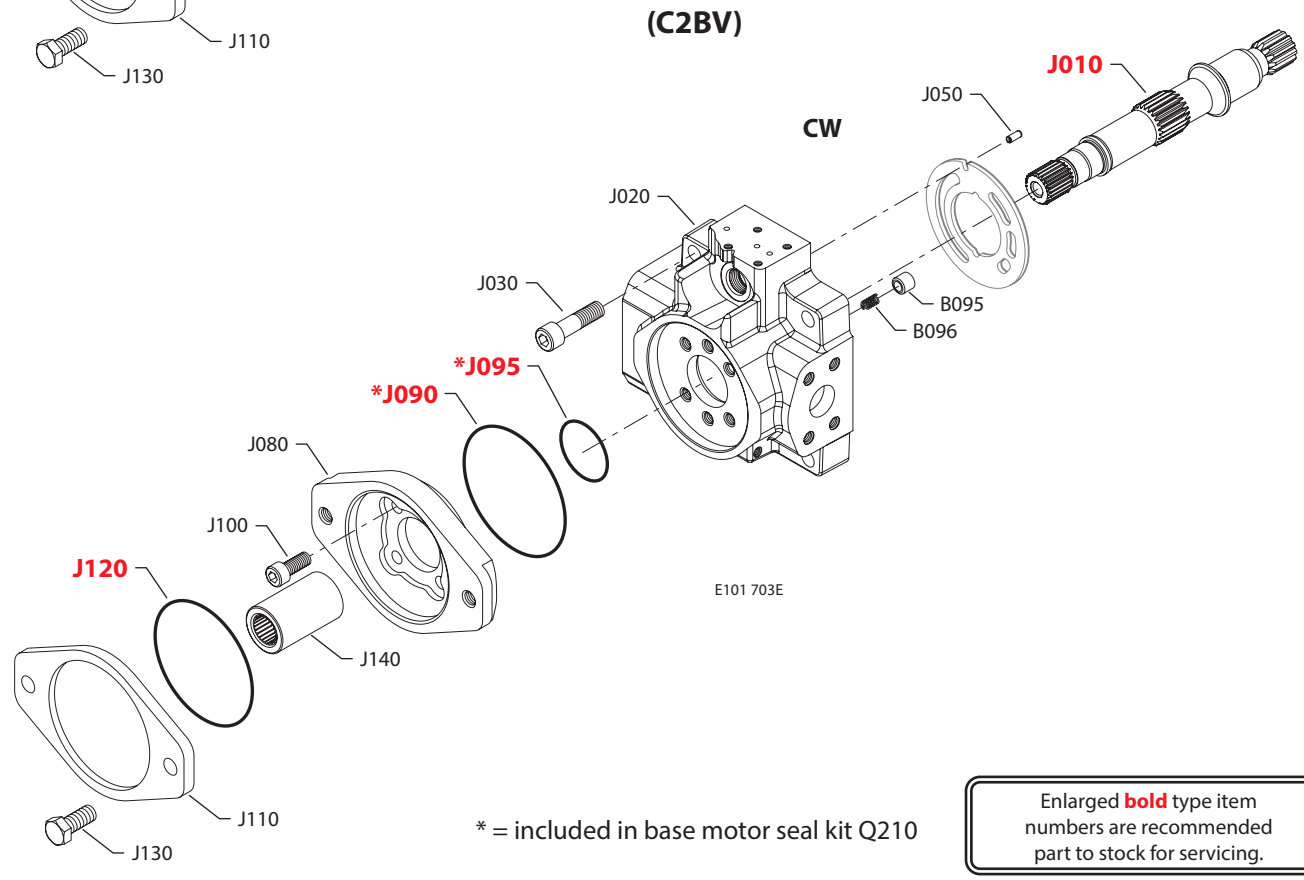

* = included in base motor seal kit Q210

Enlarged **bold** type item numbers are recommended part to stock for servicing.

Shaft, auxiliary flange and end cap

Shaft/auxiliary flange/end cap

Order code	Item	Date begin	Date end	Part number	Part name	Qty. per model/kit
C2BF	B095	03-23		1700256	Check valve poppet	1
	B096	03-23		1700257	Check valve spring	1
	J010	03-23		1700648	Shaft, 13 tooth w/auxiliary drive	1
	J020	03-23		11095327	End cap, CW, radial ports, DL, gen. 2, JRR	1
	J020	03-23		11086919	End cap, CCW, radial ports, DL, gen. 2, JRL	1
	J030	03-23		5000181 (9007314-1210)	Screw	4
	J050	03-23		9004700-1907	Pin	1
	J080	03-23		4570210	Flange adapter, B pad	1
	J090	03-23		5000099 (9004100-1550)	O-ring	1
	J095	03-23		545434 (9004100-0420)	O-ring	1
	J100	03-23		5000489	Screw	4
	J110	03-23		4460370	Cover plate	1
	J120	03-23		9004104-0440	O-ring	1
	J130	03-23		9007200-5021	Screw	2
	J140	03-23		1701187	Coupling, 13 tooth	1
	J150	03-23		4800754	Lifting bracket	1
	J155	03-23		9007315-0604	Screw	1
C2BV	B095	03-23	15-37	1700256	Check valve poppet	1
	B096	03-23	15-37	1700257	Check valve spring	1
	J010	03-23	15-37	1700648	Shaft, 13 tooth w/auxiliary drive	1
	J020	03-23	15-37	11077604	End cap, CW, radial ports, DL, gen. 1, JRR (SB-2010-002)	1
	J030	03-23	15-37	5000181 (9007314-1210)	Screw	4
	J050	03-23	15-37	9004700-1907	Pin	1
	J080	03-23	15-37	4570210	Flange adapter, B pad	1
	J090	03-23	15-37	5000099 (9004100-1550)	O-ring	1
	J095	03-23	15-37	545434 (9004100-0420)	O-ring	1
	J100	03-23	15-37	5000489	Screw	4
	J110	03-23	15-37	4460370	Cover plate	1
	J120	03-23	15-37	9004104-0440	O-ring	1
	J130	03-23	15-37	9007200-5021	Screw	2
	J140	03-23	15-37	1701187	Coupling, 13 tooth	1
	J150	03-23	15-37	4800754	Lifting bracket	1
	J155	03-23	15-37	9007315-0604	Screw	1

Shaft, auxiliary flange and end cap

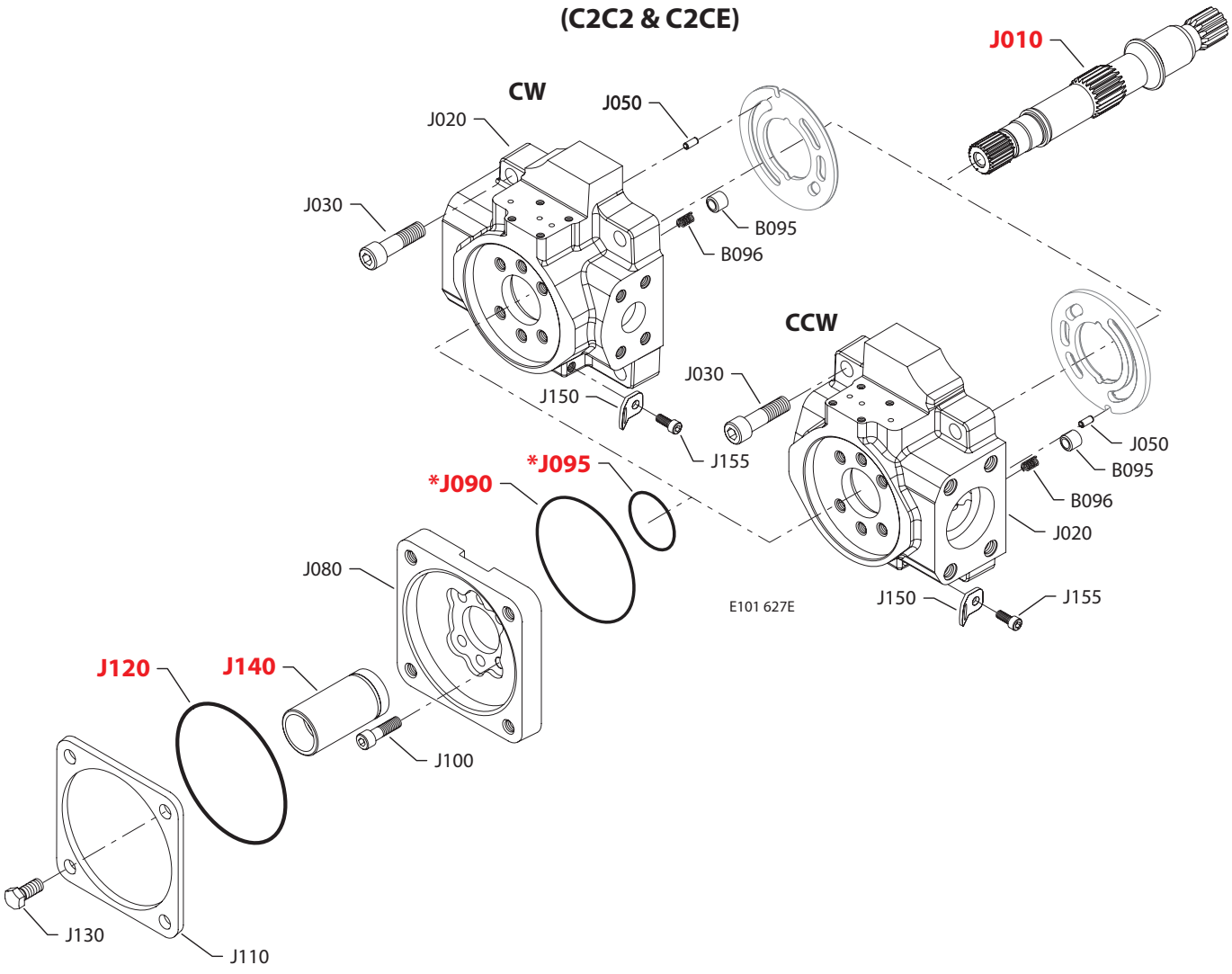

* = included in base motor seal kit Q210

Enlarged **bold** type item numbers are recommended part to stock for servicing.

Shaft, auxiliary flange and end cap

Shaft/auxiliary flange/end cap

Order code	Item	Date begin	Date end	Part number	Part name	Qty. per model/kit
C2C2	B095	03-23	15-34	1700256	Check valve poppet	1
	B096	03-23	15-34	1700257	Check valve spring	1
	J010	03-23	15-34	1700648	Shaft, 13 tooth with auxiliary drive	1
	J020	03-23	15-34	11077600	End cap, CW, radial ports, gen. 1, JRR (SB-2010-002)	1
	J020	03-23	15-34	11077606	End cap, CCW, radial ports, gen. 1, JRL (SB-2010-002)	1
	J030	03-23	15-34	5000181 (9007314-1210)	Screw	4
	J050	03-23	15-34	9004700-1907	Pin	1
	J080	03-23	15-34	11039356	Flange adapter, C pad (SB-2008-052)	1
	J090	03-23	15-34	5000099 (9004100-1550)	O-ring	1
	J095	03-23	15-34	545434 (9004100-0420)	O-ring	1
	J100	03-23	15-34	5000489	Screw	6
	J110	03-23	15-34	8800406	Cover plate	1
	J120	03-23	15-34	9004100-0480	O-ring	1
	J130	03-23	15-34	9007200-5021	Screw	6
	J140	03-23	15-34	4570133	Coupling, 14 tooth	1
	J150	03-23	15-34	4800754	Lifting bracket	1
	J155	03-23	15-34	9007315-0604	Screw	1
C2CE	B095	11-41		1700256	Check valve poppet	1
	B096	11-41		1700257	Check valve spring	1
	J010	11-41		1700648	Shaft, 13 tooth with auxiliary drive	1
	J020	11-41		11092368	End cap, CW, radial ports, gen. 2, JRR	1
	J020	11-41		11086934	End cap, CCW, radial ports, gen. 2, JRL	1
	J030	11-41		5000181 (9007314-1210)	Screw	4
	J050	11-41		9004700-1907	Pin	1
	J080	11-41		11039356	Flange adapter, C pad (SB-2008-052)	1
	J090	11-41		5000099 (9004100-1550)	O-ring	1
	J095	11-41		545434 (9004100-0420)	O-ring	1
	J100	11-41		5000489	Screw	6
	J110	11-41		8800406	Cover plate	1
	J120	11-41		9004100-0480	O-ring	1
	J130	11-41		9007200-5021	Screw	4
	J140	11-41		4570133	Coupling, 14 tooth	1
	J150	11-41		4800754	Lifting bracket	1
	J155	11-41		9007315-0604	Screw	1

Shaft, auxiliary flange and end cap

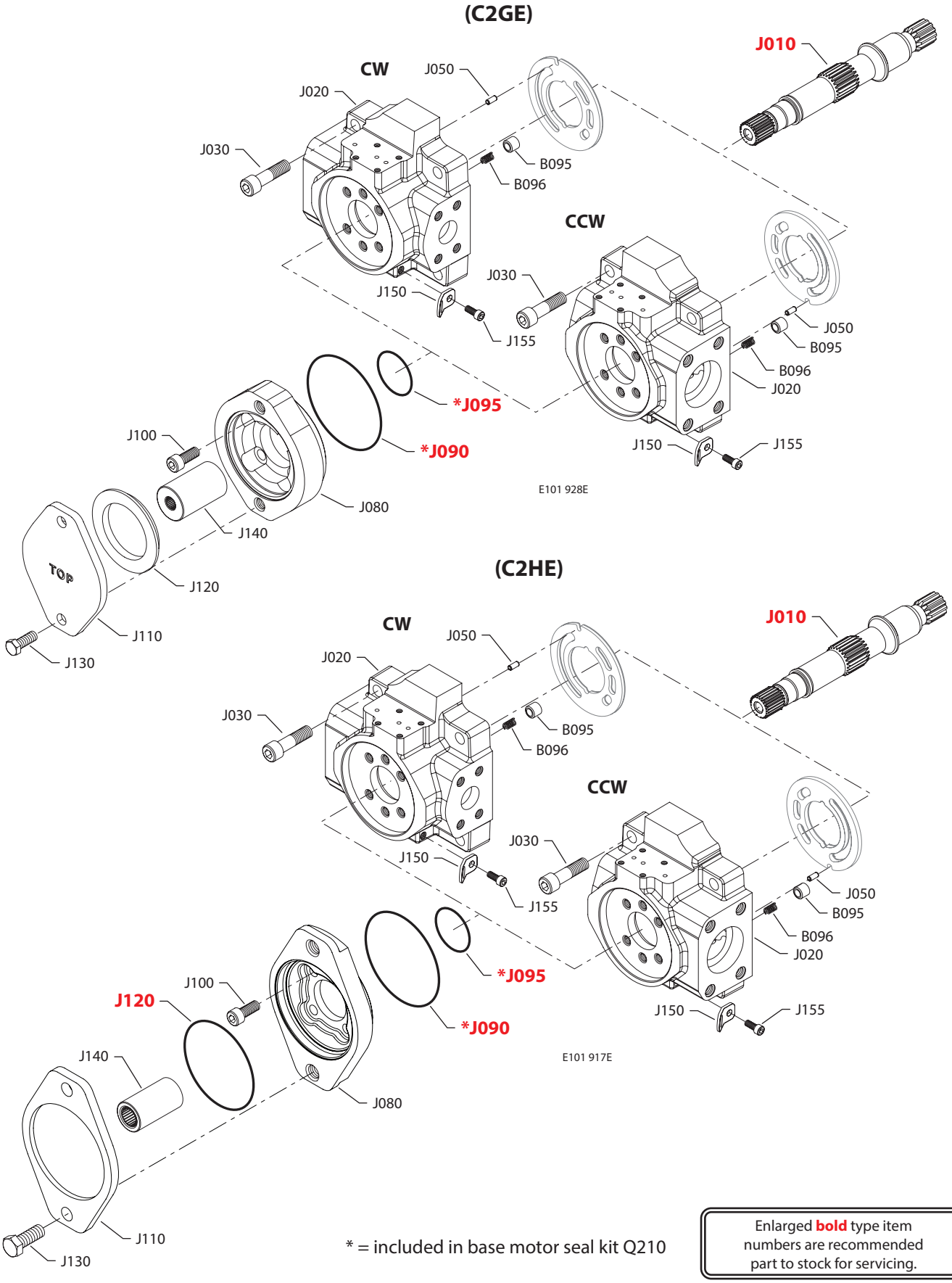

* = included in base motor seal kit Q210

Enlarged **bold** type item numbers are recommended part to stock for servicing.

Shaft, auxiliary flange and end cap

Shaft/auxiliary flange/end cap

Order code	Item	Date begin	Date end	Part number	Part name	Qty. per model/kit
C2GE	B095	11-41		1700256	Check valve poppet	1
	B096	11-41		1700257	Check valve spring	1
	J010	11-41		1700648	Shaft, 13 tooth with auxiliary drive	1
	J020	11-41		11092368	End cap, CW, radial ports, gen. 2, JRR	1
	J020	11-41		11086934	End cap, CCW, radial ports, gen. 2, JRL	1
	J030	11-41		5000181 (9007314-1210)	Screw	4
	J050	11-41		9004700-1907	Pin	1
	J080	11-41		4570289	Flange adapter, A pad	1
	J090	11-41		5000099 (9004100-1550)	O-ring	1
	J095	11-41		545434 (9004100-0420)	O-ring	1
	J100	11-41		5000489	Screw	4
	J110	11-41		4460586	Cover plate	1
	J120	11-41		4800482	A pad seal	1
	J130	11-41		9007200-3712	Screw	2
	J140	11-41		1701186	Coupling, 11 tooth	1
	J150	11-41		4800754	Lifting bracket	1
	J155	11-41		9007315-0604	Screw	1
C2HE	B095	11-41		1700256	Check valve poppet	1
	B096	11-41		1700257	Check valve spring	1
	J010	11-41		1700648	Shaft, 13 tooth with auxiliary drive	1
	J020	11-41		11092368	End cap, CW, radial ports, gen. 2, JRR	1
	J020	11-41		11086934	End cap, CCW, radial ports, gen. 2, JRL	1
	J030	11-41		5000181 (9007314-1210)	Screw	4
	J050	11-41		9004700-1907	Pin	1
	J080	11-41		4570210	Flange adapter, B pad	1
	J090	11-41		5000099 (9004100-1550)	O-ring	1
	J095	11-41		545434 (9004100-0420)	O-ring	1
	J100	11-41		5000489	Screw	4
	J110	11-41		4460370	Cover plate	1
	J120	11-41		9004104-0440	O-ring	1
	J130	11-41		9007200-5021	Screw	2
	J140	11-41		1701188	Coupling, 15 tooth	1
	J150	11-41		4800754	Lifting bracket	1
	J155	11-41		9007315-0604	Screw	1

Shaft, auxiliary flange and end cap

(C2N2)

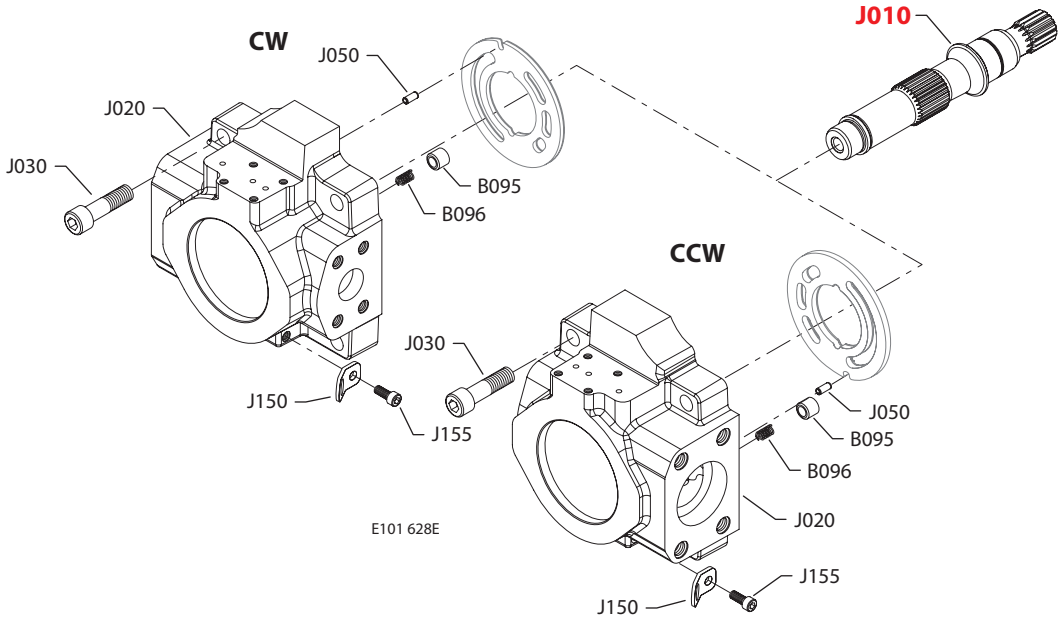

(C2N3)

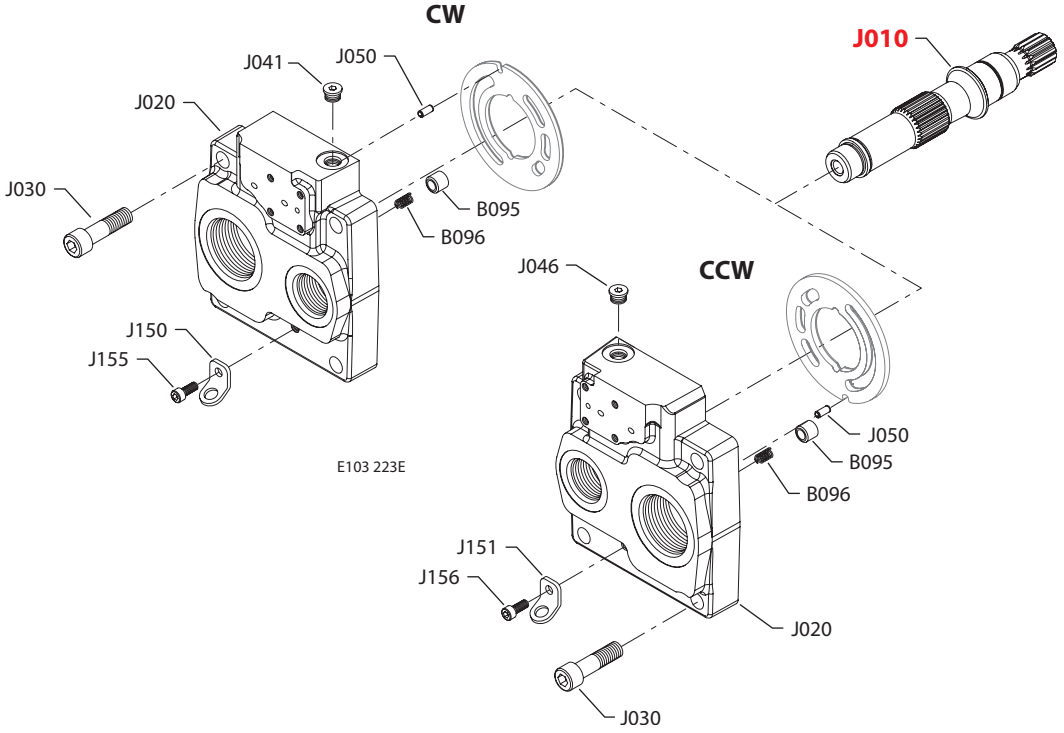

* = included in base motor seal kit Q210

Enlarged **bold** type item numbers are recommended part to stock for servicing.

Shaft, auxiliary flange and end cap

Shaft/auxiliary flange/end cap

Order code	Item	Date begin	Date end	Part number	Part name	Qty. per model/kit
C2N2	B095	03-23	15-38	1700256	Check valve poppet	1
	B096	03-23	15-38	1700257	Check valve spring	1
	J010	03-23	15-38	1700922	Shaft, 13 tooth without auxiliary drive	1
	J020	03-23	15-38	11068228	End cap, CW, radial ports, gen. 1, JRR (SB-2010-002)	1
	J020	03-23	15-38	11077605	End cap, CCW, radial ports, gen. 1, JRL (SB-2010-002)	1
	J030	03-23	15-38	5000181 (9007314-1210)	Screw	4
	J050	03-23	15-38	9004700-1907	Pin	1
	J150	03-23	15-38	4800754	Lifting bracket	1
	J155	03-23	15-38	9007315-0604	Screw	1
C2N3	B095	03-23	15-38	1700256	Check valve poppet	1
	B096	03-23	15-38	1700257	Check valve spring	1
	J010	03-23	15-38	1700922	Shaft, 13 tooth without auxiliary drive	1
	J020	03-23	15-38	11077590	End cap, CW, axial ports, gen. 1, JRR (SB-2010-002)	1
	J020	03-23	15-38	11077594	End cap, CCW, axial ports, gen. 1, JRL (SB-2010-002)	1
	J030	03-23	15-38	5000181 (9007314-1210)	Screw	4
	J041	03-23	15-38	140644 (9005110-5600)	Plug assembly, JRR	1
	J046	03-23	15-38	140644 (9005110-5600)	Plug assembly, JRL	1
	J050	03-23	15-38	9004700-1907	Pin	1
	J150	03-23	15-38	4800754	Lifting bracket, JRR	1
	J151	03-23	15-38	4800754	Lifting bracket, JRL	1
	J155	03-23	15-38	9007315-0604	Screw, JRR	1
	J156	03-23	15-38	9007315-0604	Screw, JRL	1

Shaft, auxiliary flange and end cap

(C2N4)

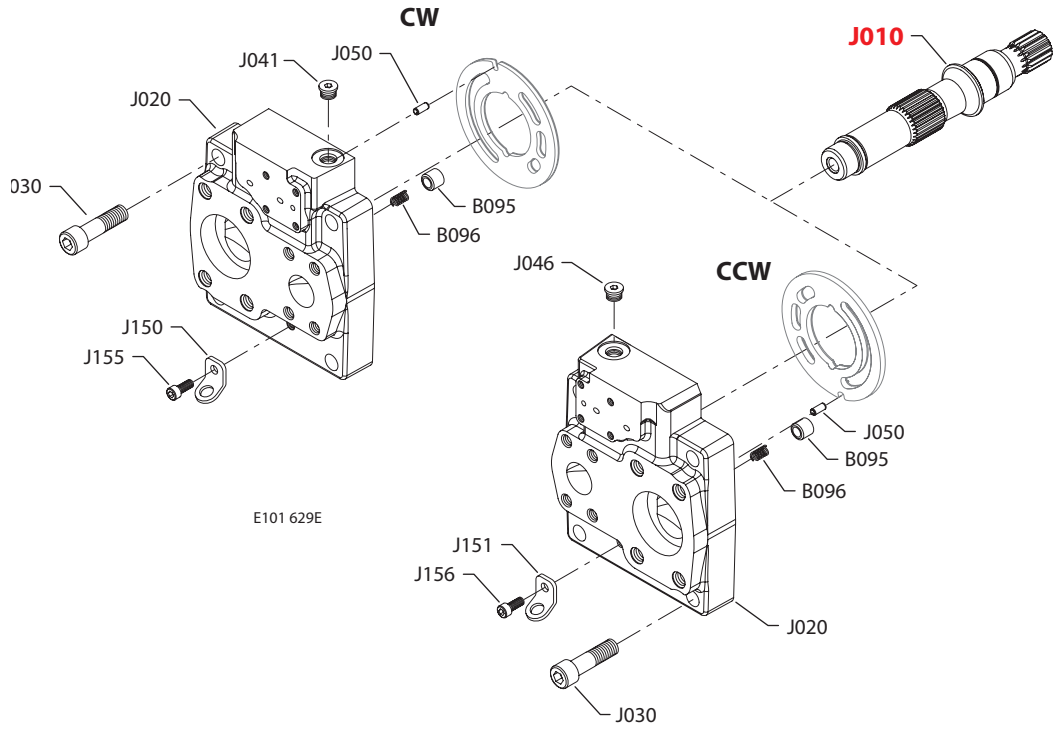

(C2N5)

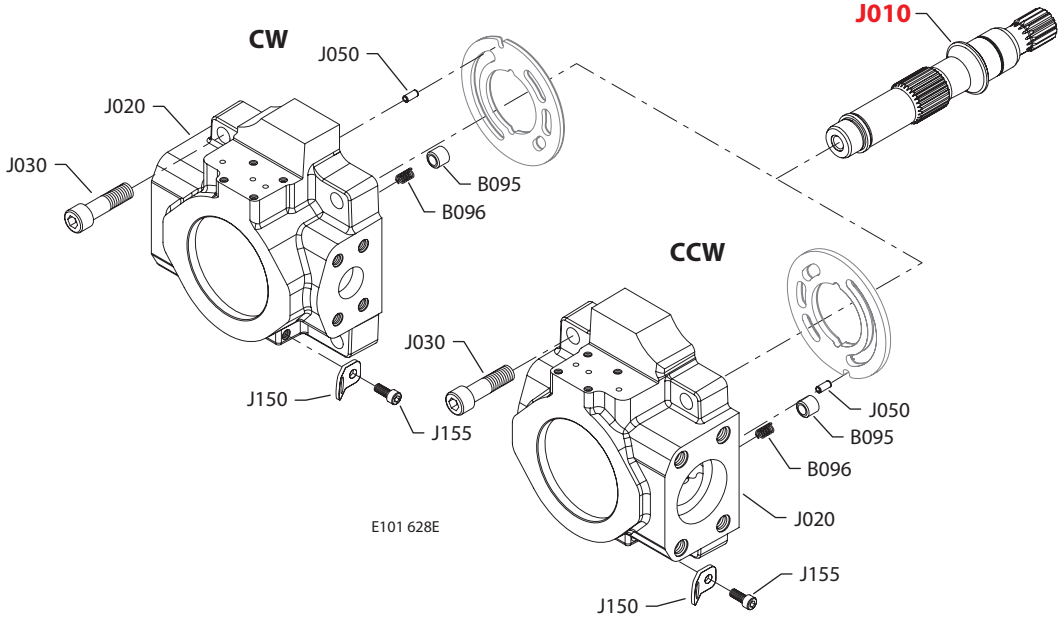

* = included in base motor seal kit Q210

Enlarged **bold** type item numbers are recommended part to stock for servicing.

Shaft, auxiliary flange and end cap

Shaft/auxiliary flange/end cap

Order code	Item	Date begin	Date end	Part number	Part name	Qty. per model/kit
C2N4	B095	03-23	15-40	1700256	Check valve poppet	1
	B096	03-23	15-40	1700257	Check valve spring	1
	J010	03-23	15-40	1700922	Shaft, 13 tooth without auxiliary drive	1
	J020	03-23	15-40	11077589	End cap, CW, axial ports, gen. 1, JRR (SB-2010-002)	1
	J020	03-23	15-40	11077593	End cap, CCW, axial ports, gen. 1, JRL (SB-2010-002)	1
	J030	03-23	15-40	5000181 (9007314-1210)	Screw	4
	J041	03-23	15-40	140644 (9005110-5600)	Plug assembly, JRR	1
	J046	03-23	15-40	140644 (9005110-5600)	Plug assembly, JRL	1
	J050	03-23	15-40	9004700-1907	Pin	1
	J150	03-23	15-40	4800754	Lifting bracket, JRR	1
	J151	03-23	15-40	4800754	Lifting bracket, JRL	1
	J155	03-23	15-40	9007315-0604	Screw, JRR	1
	J156	03-23	15-40	9007315-0604	Screw, JRL	1
C2N5	B095	09-15	12-07	1700256	Check valve poppet	1
	B096	09-15	12-07	1700257	Check valve spring	1
	J010	09-15	12-07	1700922	Shaft, 13 tooth without auxiliary drive	1
	J020	09-15	12-07	11077610	End cap, CW, radial ports, gen. 1, JRR (SB-2010-002)	1
	J020	09-15	12-07	11077609	End cap, CCW, radial ports, gen. 1, JRL (SB-2010-002)	1
	J030	09-15	12-07	5000181 (9007314-1210)	Screw	4
	J050	09-15	12-07	9004700-1907	Pin	1
	J150	09-15	12-07	4800754	Lifting bracket	1
	J155	09-15	12-07	9007315-0604	Screw	1

Shaft, auxiliary flange and end cap

(C2N9)

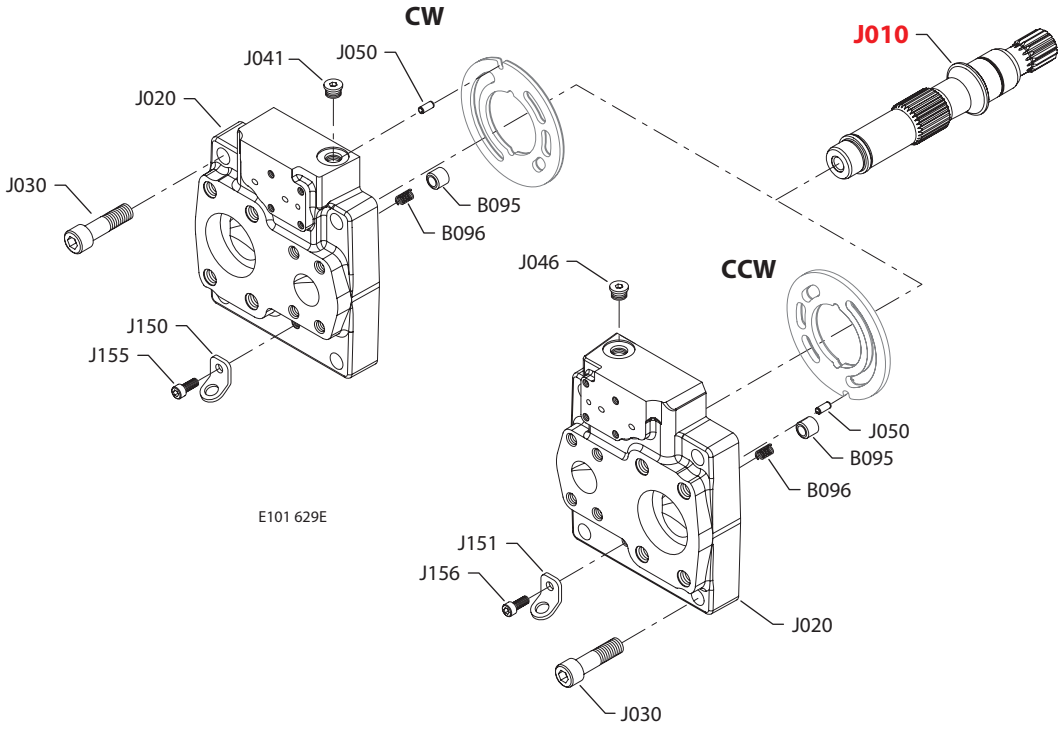

(C2NE)

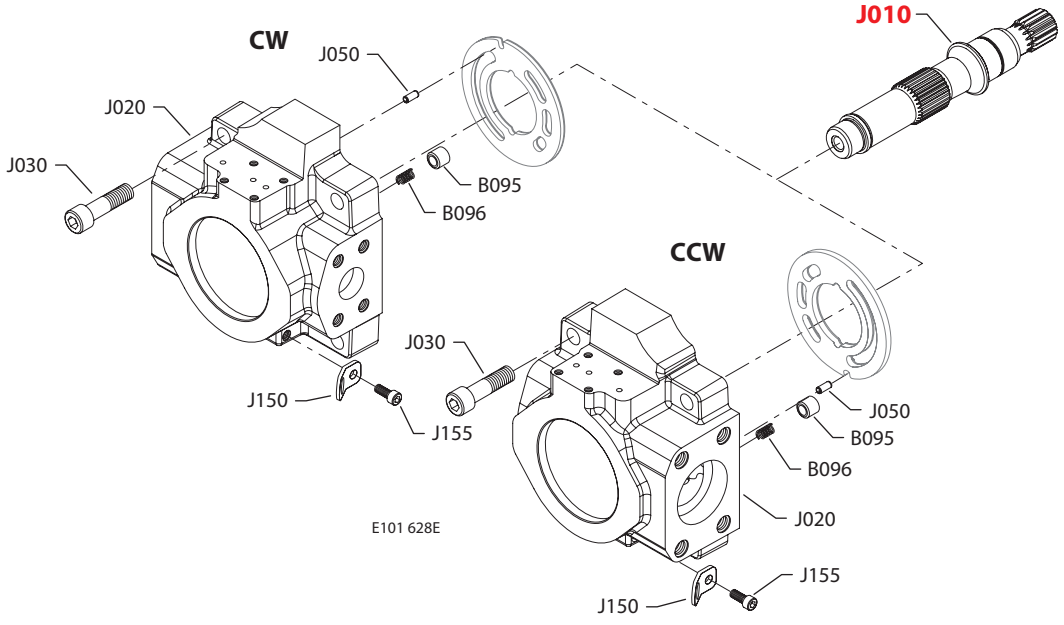

* = included in base motor seal kit Q210

Enlarged **bold** type item numbers are recommended part to stock for servicing.

Shaft, auxiliary flange and end cap

Shaft/auxiliary flange/end cap

Order code	Item	Date begin	Date end	Part number	Part name	Qty. per model/kit
C2N9	B095	11-39		1700256	Check valve poppet	1
	B096	11-39		1700257	Check valve spring	1
	J010	11-39		1700922	Shaft, 13 tooth without auxiliary drive	1
	J020	11-39		11095294	End cap, CW, axial ports, gen. 2, JRR	1
	J020	11-39		11095297	End cap, CCW, axial ports, gen. 2, JRL	1
	J030	11-39		5000181 (9007314-1210)	Screw	4
	J041	11-39		140644 (9005110-5600)	Plug assembly, JRR	1
	J046	11-39		140644 (9005110-5600)	Plug assembly, JRL	1
	J050	11-39		9004700-1907	Pin	1
	J150	11-39		4800754	Lifting bracket, JRR	1
	J151	11-39		4800754	Lifting bracket, JRL	1
	J155	11-39		9007315-0604	Screw, JRR	1
	J156	11-39		9007315-0604	Screw, JRL	1
C2NE	B095	08-26		1700256	Check valve poppet	1
	B096	08-26		1700257	Check valve spring	1
	J010	08-26		1700922	Shaft, 13 tooth without auxiliary drive	1
	J020	08-26		11095323	End cap, CW, radial ports, gen. 2, JRR	1
	J020	08-26		11082641	End cap, CCW, radial ports, gen. 2, JRL	1
	J030	08-26		5000181 (9007314-1210)	Screw	4
	J050	08-26		9004700-1907	Pin	1
	J150	08-26		4800754	Lifting bracket	1
	J155	08-26		9007315-0604	Screw	1

Shaft, auxiliary flange and end cap

(C2NH)

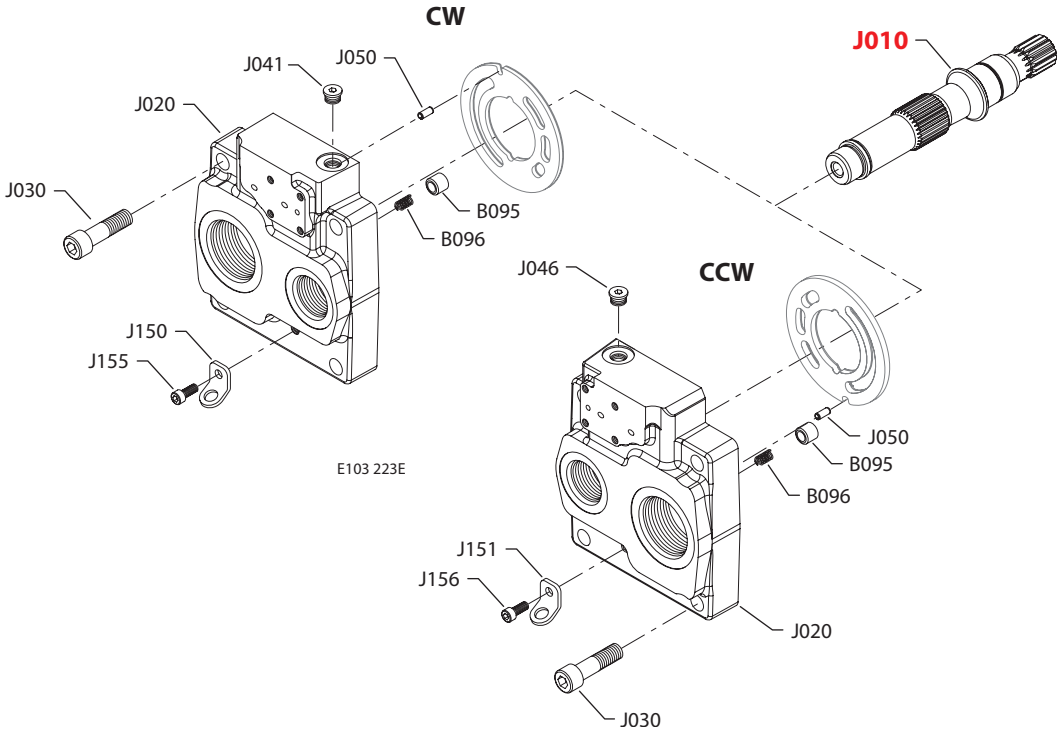

(C2NV)

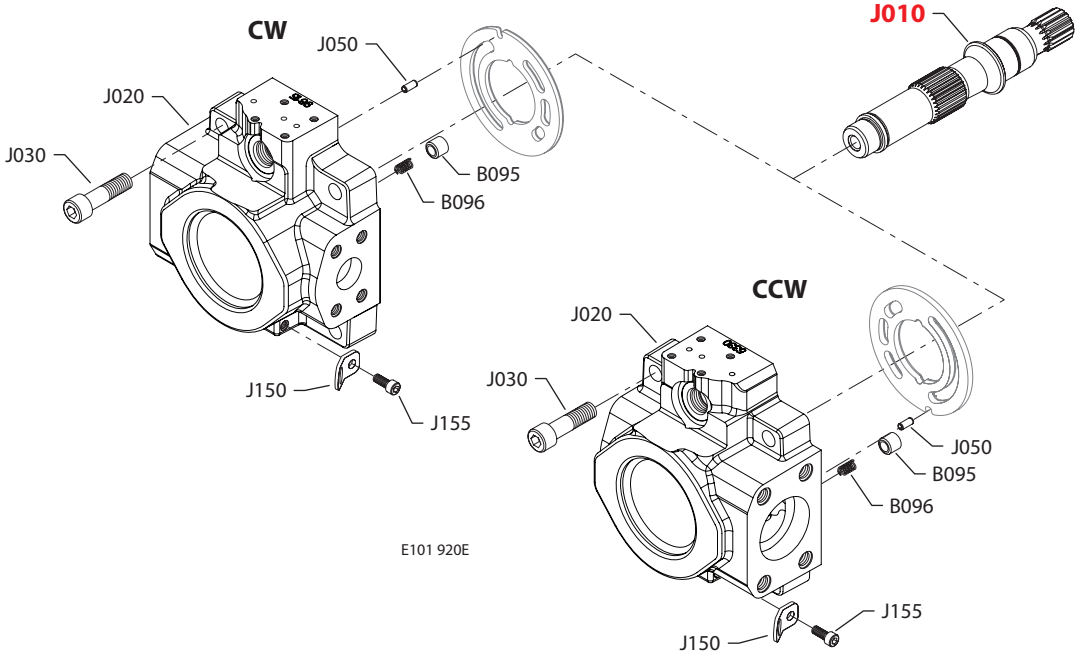

* = included in base motor seal kit Q210

Enlarged **bold** type item numbers are recommended part to stock for servicing.

Shaft, auxiliary flange and end cap

shaft/auxiliary flange/end cap

Order code	Item	Date begin	Date end	Part number	Part name	Qty. per model/kit
C2NH	B095	11-47		1700256	Check valve poppet	1
	B096	11-47		1700257	Check valve spring	1
	J010	11-47		1700922	Shaft, 13 tooth without auxiliary drive	1
	J020	11-47		11095295	End cap, CW, axial ports, gen. 2, JRR	1
	J020	11-47		11095298	End cap, CCW, axial ports, gen. 2, JRL	1
	J030	11-47		5000181 (9007314-1210)	Screw	4
	J041	11-47		140644 (9005110-5600)	Plug assembly, JRR	1
	J046	11-47		140644 (9005110-5600)	Plug assembly, JRL	1
	J050	11-47		9004700-1907	Pin	1
	J150	11-47		4800754	Lifting bracket, JRR	1
	J151	11-47		4800754	Lifting bracket, JRL	1
	J155	11-47		9007315-0604	Screw, JRR	1
	J156	11-47		9007315-0604	Screw, JRL	1
C2NV	B095	11-47		1700256	Check valve poppet	1
	B096	11-47		1700257	Check valve spring	1
	J010	11-47		1700922	Shaft, 13 tooth without auxiliary drive	1
	J020	11-47		11099615	End cap, CW, radial ports, DL, gen. 2, JRR	1
	J020	11-47		11095330	End cap, CCW, radial ports, DL, gen. 2, JRL	1
	J030	11-47		5000181 (9007314-1210)	Screw	4
	J050	11-47		9004700-1907	Pin	1
	J150	11-47		4800754	Lifting bracket	1
	J155	11-47		9007315-0604	Screw	1

Shaft, auxiliary flange and end cap

C2NW & C2NZ

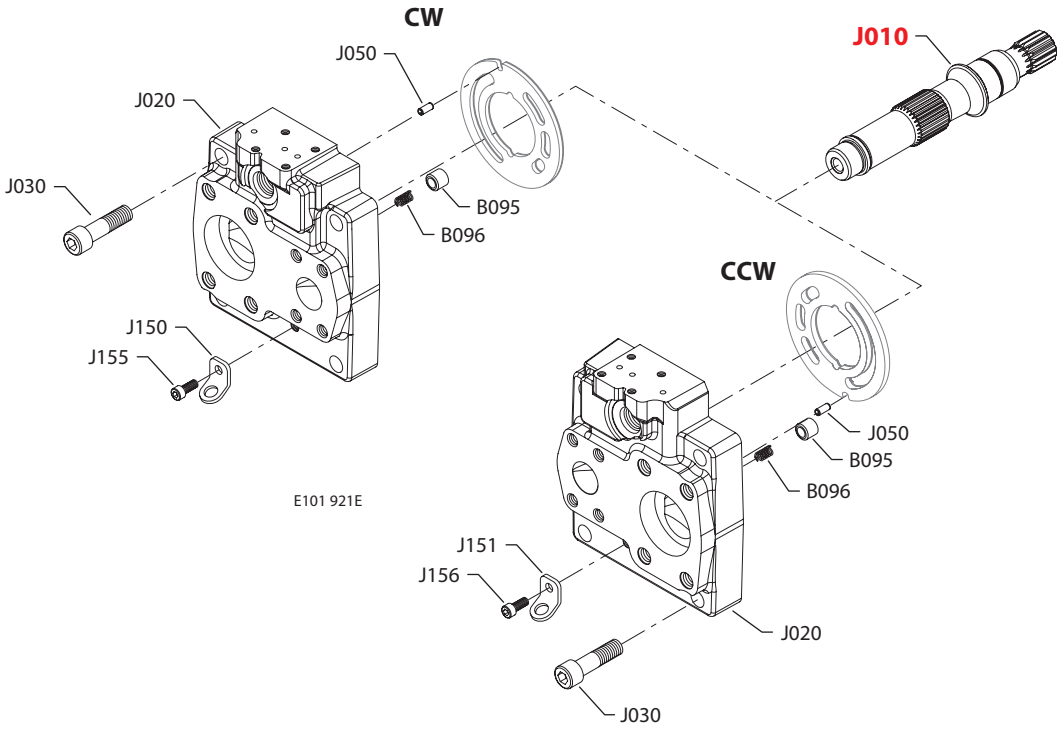

C2NX

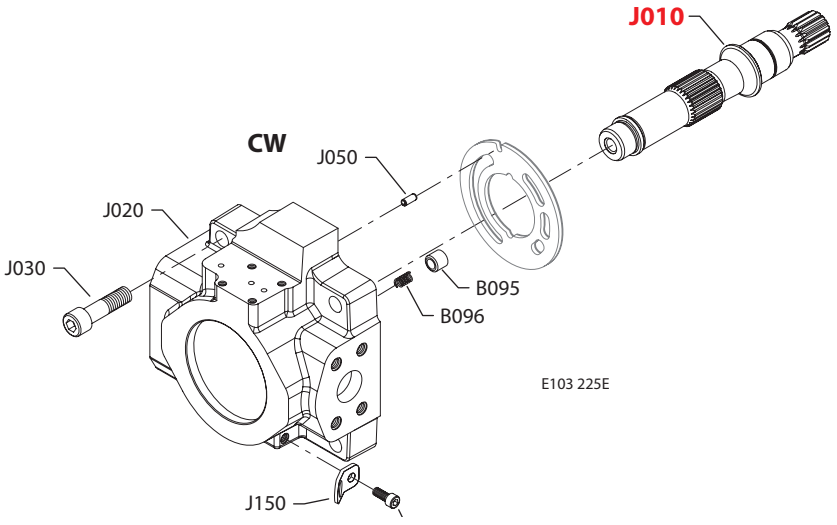

* = included in base motor seal kit Q210

Enlarged **bold** type item numbers are recommended part to stock for servicing.

Shaft, auxiliary flange and end cap

Shaft/auxiliary flange/end cap

Order code	Item	Date begin	Date end	Part number	Part name	Qty. per model/kit
C2NW	B095	03-23	12-07	1700256	Check valve poppet	1
	B096	03-23	12-07	1700257	Check valve spring	1
	J010	03-23	12-07	1700922	Shaft, 13 tooth without auxiliary drive	1
	J020	03-23	12-07	11077591	End cap, CW, axial ports, DL, gen. 1, JRR (SB-2010-002)	1
	J020	03-23	12-07	11077595	End cap, CCW, axial ports, DL, gen. 1, JRL (SB-2010-002)	1
	J030	03-23	12-07	5000181 (9007314-1210)	Screw	4
	J050	03-23	12-07	9004700-1907	Pin	1
	J150	03-23	12-07	4800754	Lifting bracket, JRR (SB-2010-002)	1
	J151	03-23	12-07	4800754	Lifting bracket, JRL (SB-2010-002)	1
	J155	03-23	12-07	9007315-0604	Screw, JRR	1
	J156	03-23	12-07	9007315-0604	Screw, JRL	1
C2NX	B095	12-07	15-36	1700256	Check valve poppet	1
	B096	12-07	15-36	1700257	Check valve spring	1
	J010	12-07	15-36	1700922	Shaft, 13 tooth without auxiliary drive	1
	J020	12-07	15-36	11106865	End cap, CW, radial ports, gen. 2, JRR	1
	J030	12-07	15-36	5000181 (9007314-1210)	Screw	4
	J050	12-07	15-36	9004700-1907	Pin	1
	J150	12-07	15-36	4800754	Lifting bracket	1
	J155	12-07	15-36	9007315-0604	Screw	1
C2NZ	B095	11-43		1700256	Check valve poppet	1
	B096	11-43		1700257	Check valve spring	1
	J010	11-43		1700922	Shaft, 13 tooth without auxiliary drive	1
	J020	11-43		11095296	End cap, CW, axial ports, DL, gen. 2, JRR	1
	J020	11-43		11095299	End cap, CCW, axial ports, DL, gen. 2, JRL	1
	J030	11-43		5000181 (9007314-1210)	Screw	4
	J050	11-43		9004700-1907	Pin	1
	J150	11-43		4800754	Lifting bracket, JRR	1
	J151	11-43		4800754	Lifting bracket, JRL	1
	J155	11-43		9007315-0604	Screw, JRR	1
	J156	11-43		9007315-0604	Screw, JRL	1

Shaft, auxiliary flange and end cap

(C2R2 & C2RE)

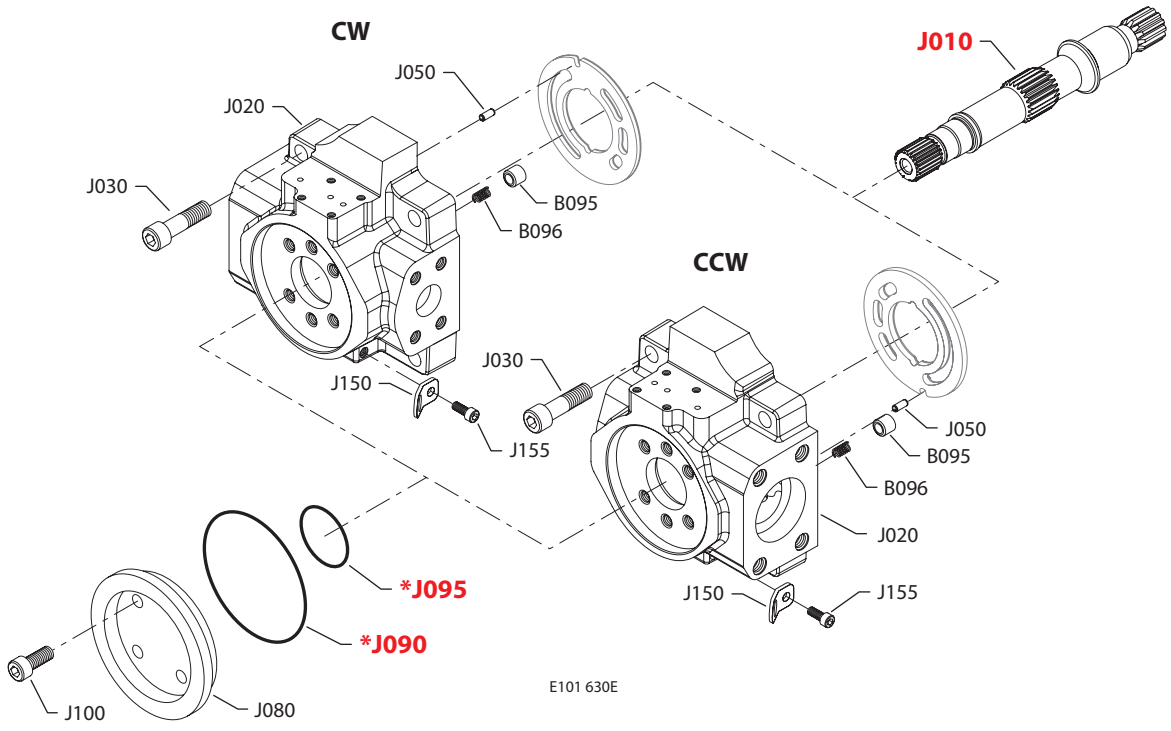

E101 630E

(C2RF)

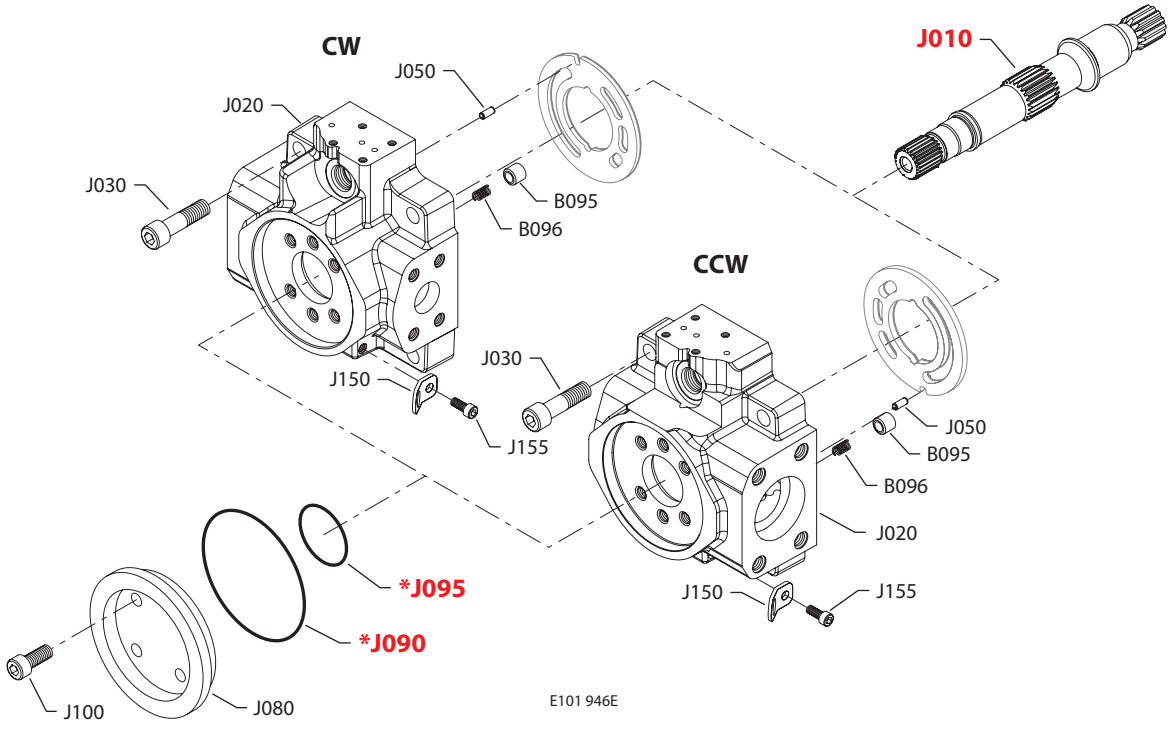

E101 946E

* = included in base motor seal kit Q210

Enlarged **bold** type item numbers are recommended part to stock for servicing.

Shaft, auxiliary flange and end cap

Shaft/auxiliary flange/end cap

Order code	Item	Date begin	Date end	Part number	Part name	Qty. per model/kit
C2R2	B095	03-23	15-34	1700256	Check valve poppet	1
	B096	03-23	15-34	1700257	Check valve spring	1
	J010	03-23	15-34	1700648	Shaft, 13 tooth with auxiliary drive	1
	J020	03-23	15-34	11077600	End cap, CW, radial ports, gen. 1, JRR (SB-2010-002)	1
	J020	03-23	15-34	11077606	End cap, CCW, radial ports, gen. 1, JRL (SB-2010-002)	1
	J030	03-23	15-34	5000181 (9007314-1210)	Screw	4
	J050	03-23	15-34	9004700-1907	Pin	1
	J080	03-23	15-34	4570179	Running cover	1
	J090	03-23	15-34	5000099 (9004100-1550)	O-ring	1
	J095	03-23	15-34	545434 (9004104-0310)	O-ring	1
	J100	03-23	15-34	5000489	Screw	4
	J150	03-23	15-34	4800754	Lifting bracket	1
	J155	03-23	15-34	9007315-0604	Screw	1
C2RE	B095	11-41		1700256	Check valve poppet	1
	B096	11-41		1700257	Check valve spring	1
	J010	11-41		1700648	Shaft, 13 tooth with auxiliary drive	1
	J020	11-41		11092368	End cap, CW, radial ports, gen. 2, JRR	1
	J020	11-41		11086934	End cap, CCW, radial ports, gen. 2, JRRL	1
	J030	11-41		5000181 (9007314-1210)	Screw	4
	J050	11-41		9004700-1907	Pin	1
	J080	11-41		4570179	Running cover	1
	J090	11-41		5000099 (9004100-1550)	O-ring	1
	J095	11-41		545434 (9004104-0310)	O-ring	1
	J100	11-41		5000489	Screw	4
	J150	11-41		4800754	Lifting bracket	1
	J155	11-41		9007315-0604	Screw	1
C2RF	B095	11-47		1700256	Check valve poppet	1
	B096	11-47		1700257	Check valve spring	1
	J010	11-47		1700648	Shaft, 13 tooth with auxiliary drive	1
	J020	11-47		11095327	End cap, CW, radial ports, gen. 2, JRR	1
	J020	11-47		11086919	End cap, CCW, radial ports, gen. 2, JRL	1
	J030	11-47		5000181 (9007314-1210)	Screw	4
	J050	11-47		9004700-1907	Pin	1
	J080	11-47		4570179	Running cover	1
	J090	11-47		5000099 (9004100-1550)	O-ring	1
	J095	11-47		545434 (9004104-0310)	O-ring	1
	J100	11-47		5000489	Screw	4
	J150	11-47		4800754	Lifting bracket	1
	J155	11-47		9007315-0604	Screw	1

Shaft, auxiliary flange and end cap

(C2RV)

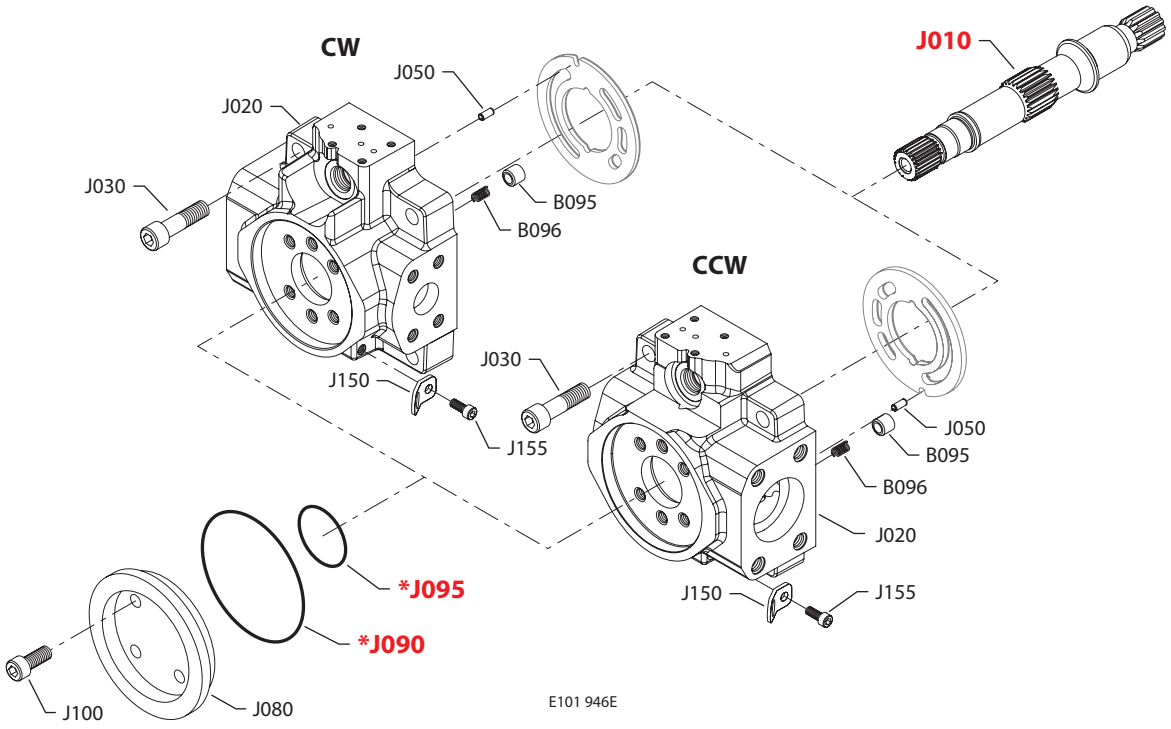

(C2T2)

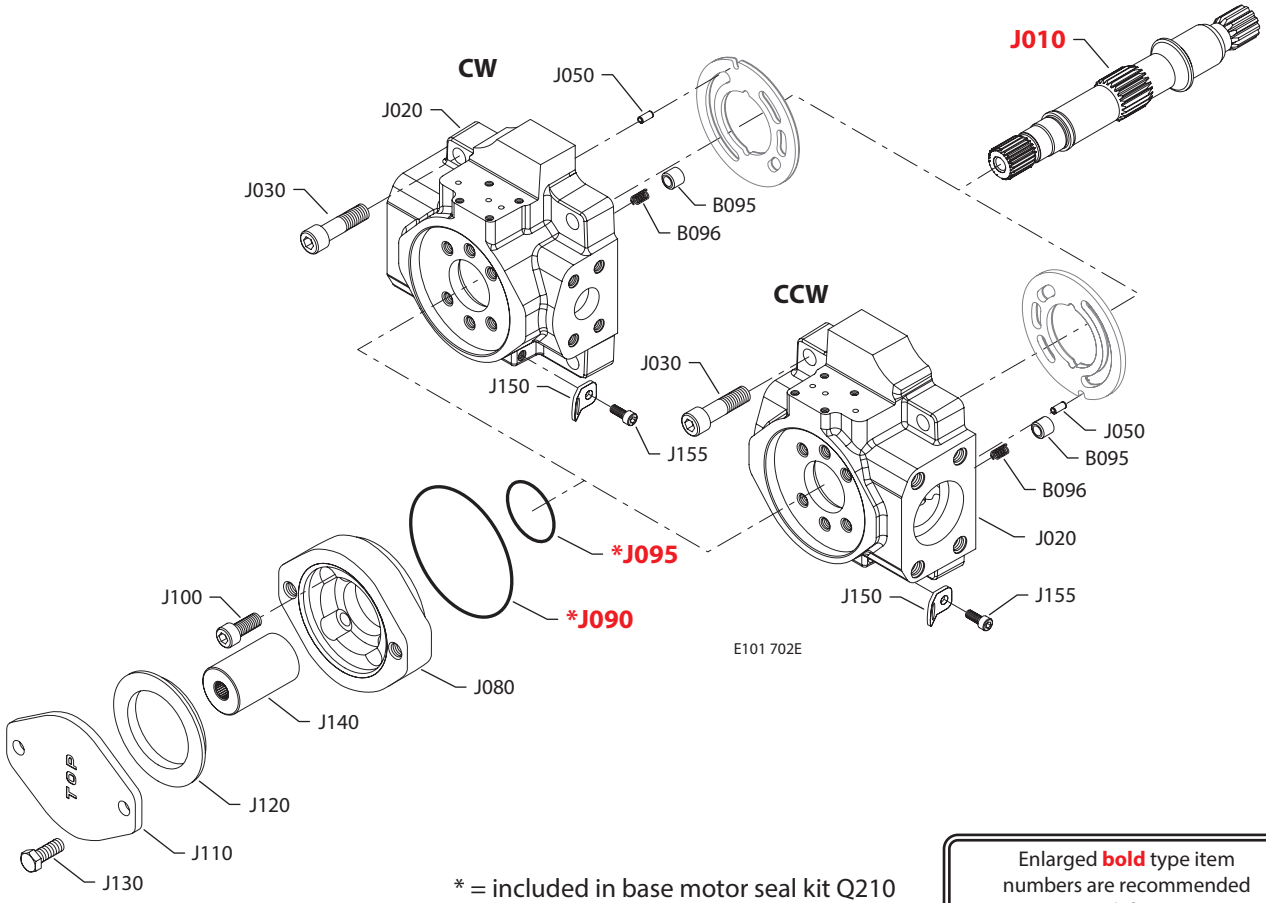

* = included in base motor seal kit Q210

Enlarged **bold** type item numbers are recommended part to stock for servicing.

Shaft, auxiliary flange and end cap

Shaft/auxiliary flange/end cap

Order code	Item	Date begin	Date end	Part number	Part name	Qty. per model/kit
C2RV	B095	03-23	15-37	1700256	Check valve poppet	1
	B096	03-23	15-37	1700257	Check valve spring	1
	J010	03-23	15-37	1700648	Shaft, 13 tooth with auxiliary drive	1
	J020	03-23	15-37	11077604	End cap, CW, radial ports, DL, gen. 1, JRR (SB-2010-002)	1
	J020	03-23	15-37	11077608	End cap, CCW, radial ports, DL, gen. 1, JRL (SB-2010-002)	1
	J030	03-23	15-37	5000181 (9007314-1210)	Screw	4
	J050	03-23	15-37	9004700-1907	Pin	1
	J080	03-23	15-37	4570179	Running cover	1
	J090	03-23	15-37	5000099 (9004100-1550)	O-ring	1
	J095	03-23	15-37	545434 (9004104-0310)	O-ring	1
	J100	03-23	15-37	5000489	Screw	4
	J150	03-23	15-37	4800754	Lifting bracket	1
	J155	03-23	15-37	9007315-0604	Screw	1
C2T2	B095	03-23	15-34	1700256	Check valve poppet	1
	B096	03-23	15-34	1700257	Check valve spring	1
	J010	03-23	15-34	1700648	Shaft, 13 tooth with auxiliary drive	1
	J020	03-23	15-34	11077600	End cap, CW, radial ports, gen. 1, JRR (SB-2010-002)	1
	J020	03-23	15-34	11077606	End cap, CCW, radial ports, gen. 1, JRL (SB-2010-002)	1
	J030	03-23	15-34	5000181 (9007314-1210)	Screw	4
	J050	03-23	15-34	9004700-1907	Pin	1
	J080	03-23	15-34	4570289	Flange adapter, A pad	1
	J090	03-23	15-34	5000099 (9004100-1550)	O-ring	1
	J095	03-23	15-34	545434 (9004100-0420)	O-ring	1
	J100	03-23	15-34	5000489	Screw	4
	J110	03-23	15-34	4460586	Cover plate	1
	J120	03-23	15-34	4800482	A pad seal	1
	J130	03-23	15-34	9007200-3712	Screw	2
	J140	03-23	15-34	1701186	Coupling, 11 tooth	1
	J150	03-23	15-34	4800754	Lifting bracket	1
	J155	03-23	15-34	9007315-0604	Screw	1

Shaft, auxiliary flange and end cap

(C2TA)

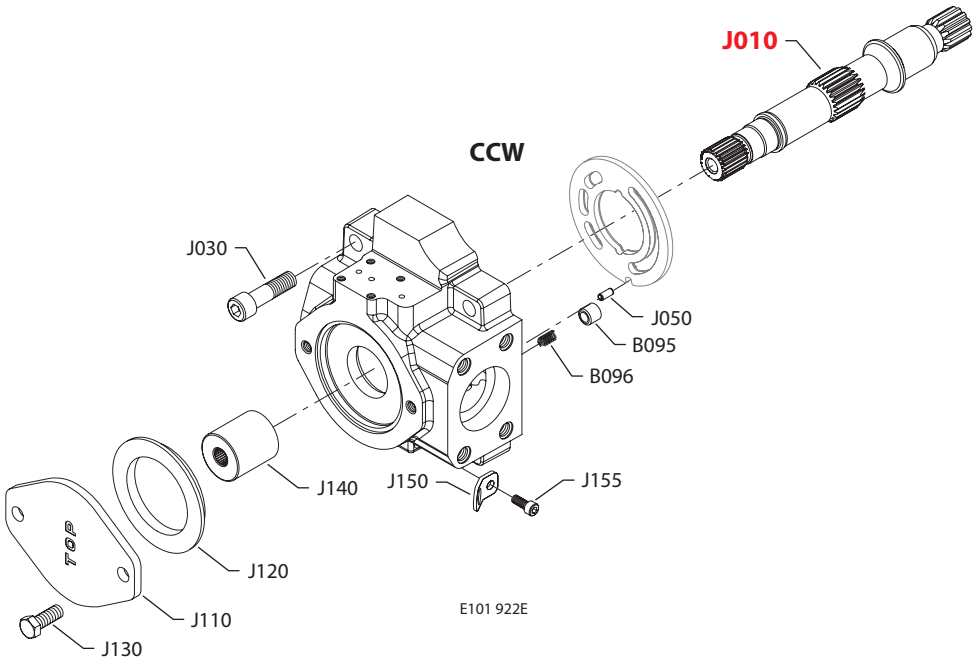

(C2TE)

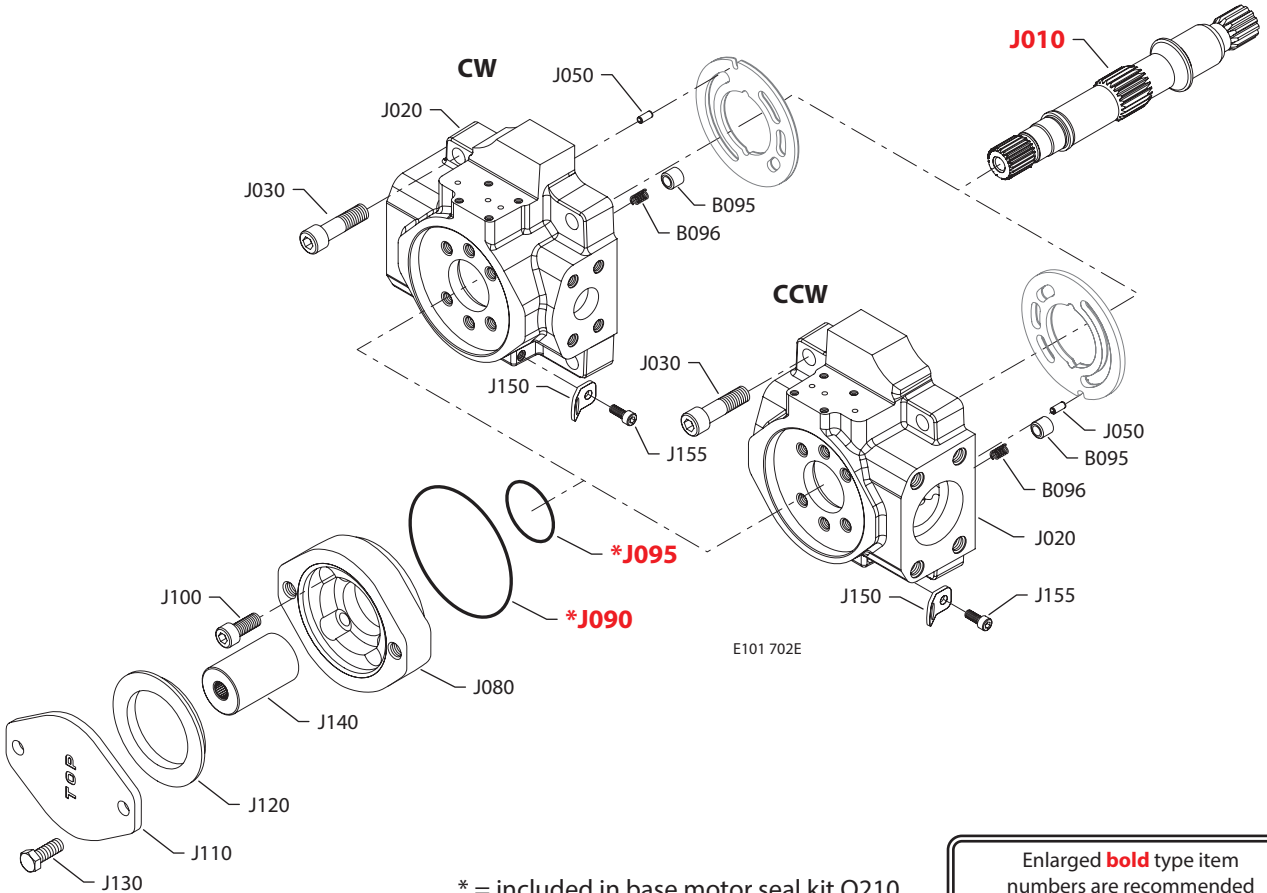

* = included in base motor seal kit Q210

Enlarged **bold** type item numbers are recommended part to stock for servicing.

Shaft, auxiliary flange and end cap

Shaft/auxiliary flange/end cap

Order code	Item	Date begin	Date end	Part number	Part name	Qty. per model/kit
C2TA	B095	03-23		1700256	Check valve poppet	1
	B096	03-23		1700257	Check valve spring	1
	J010	03-23		1700648	Shaft, 13 tooth with auxiliary drive	1
	J020	03-23		11077607	End cap, CCW, radial ports, gen. 1, JRL (SB-2010-002)	1
	J030	03-23		5000181 (9007314-1210)	Screw	4
	J050	03-23		9004700-1907	Pin	1
	J110	03-23		4460586	Cover plate	1
	J120	03-23		4800482	A pad seal	1
	J130	03-23		9007200-3712	Screw	2
	J140	03-23		1700731	Coupling, 11 tooth	1
	J150	03-23		4800754	Lifting bracket	1
	J155	03-23		9007315-0604	Screw	1
C2TE	B095	03-23		1700256	Check valve poppet	1
	B096	03-23		1700257	Check valve spring	1
	J010	03-23		1700648	Shaft, 13 tooth with auxiliary drive	1
	J020	03-23		11092368	End cap, CW, radial ports, gen. 2, JRR (SB-2010-002)	1
	J020	03-23		11086934	End cap, CCW, radial ports, gen. 2, JRL (SB-2010-002)	1
	J030	03-23		5000181 (9007314-1210)	Screw	4
	J050	03-23		9004700-1907	Pin	1
	J080	03-23		4570289	Flange adapter, A pad	1
	J090	03-23		5000099 (9004100-1550)	O-ring	1
	J095	03-23		545434 (9004100-0420)	O-ring	1
	J100	03-23		5000489	Screw	4
	J110	03-23		4460586	Cover plate	1
	J120	03-23		4800482	A pad seal	1
	J130	03-23		9007200-3712	Screw	2
	J140	03-23		1701186	Coupling, 11 tooth	1
	J150	03-23		4800754	Lifting bracket	1
	J155	03-23		9007315-0604	Screw	1

Shaft, auxiliary flange and end cap

(C2TF & C2TV)

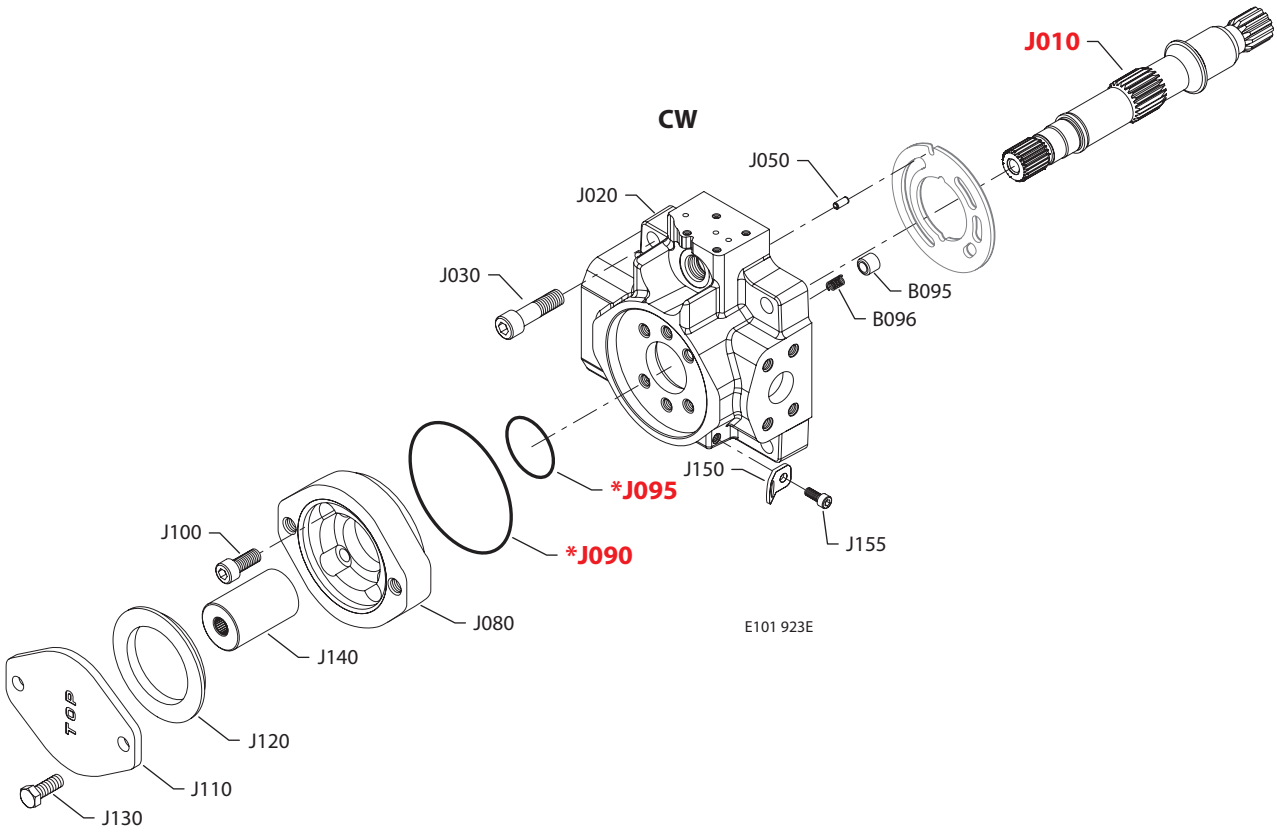

(C2TY)

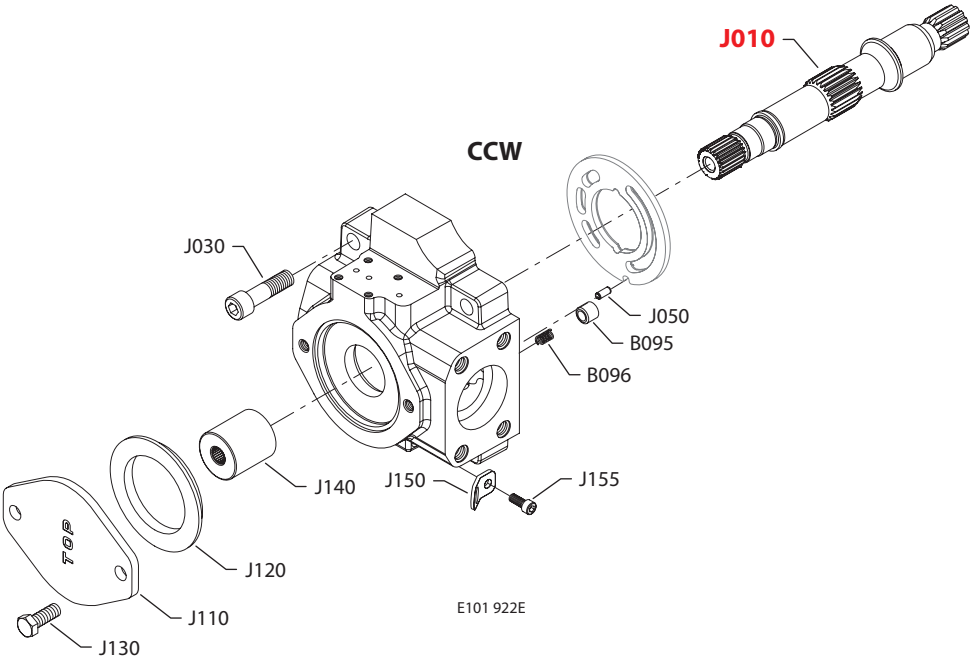

* = included in base motor seal kit Q210

Enlarged **bold** type item numbers are recommended part to stock for servicing.

Shaft, auxiliary flange and end cap

Shaft/auxiliary flange/end cap

Order code	Item	Date begin	Date end	Part number	Part name	Qty. per model/kit
C2TF	B095	11-47		1700256	Check valve poppet	1
	B096	11-47		1700257	Check valve spring	1
	J010	11-47		1700648	Shaft, 13 tooth with auxiliary drive	1
	J020	11-47		11095327	End cap, CW, radial ports, DL, gen. 2, JRR	1
	J030	11-47		5000181 (9007314-1210)	Screw	4
	J050	11-47		9004700-1907	Pin	1
	J080	11-47		4570289	Flange adapter, A pad	1
	J090	11-47		5000099 (9004100-1550)	O-ring	1
	J095	11-47		545434 (9004100-0420)	O-ring	1
	J100	11-47		5000489	Screw	4
	J110	11-47		4460586	Cover plate	1
	J120	11-47		4800482	A pad seal	1
	J130	11-47		9007200-3712	Screw	2
	J140	11-47		1701186	Coupling, 11 tooth	1
	J150	11-47		4800754	Lifting bracket	1
	J155	11-47		9007315-0604	Screw	1
C2TV	B095	08-27	15-37	1700256	Check valve poppet	1
	B096	08-27	15-37	1700257	Check valve spring	1
	J010	08-27	15-37	1700648	Shaft, 13 tooth with auxiliary drive	1
	J020	08-27	15-37	11077604	End cap, CW, radial ports, DL, gen. 1, JRR (SB-2010-002)	1
	J030	08-27	15-37	5000181 (9007314-1210)	Screw	4
	J050	08-27	15-37	9004700-1907	Pin	1
	J080	08-27	15-37	4570289	Flange adapter, A pad	1
	J090	08-27	15-37	5000099 (9004100-1550)	O-ring	1
	J095	08-27	15-37	545434 (9004100-0420)	O-ring	1
	J100	08-27	15-37	5000489	Screw	4
	J110	08-27	15-37	4460586	Cover plate	1
	J120	08-27	15-37	4800482	A pad seal	1
	J130	08-27	15-37	9007200-3712	Screw	2
	J140	08-27	15-37	1701186	Coupling, 11 tooth	1
	J150	08-27	15-37	4800754	Lifting bracket	1
	J155	08-27	15-37	9007315-0604	Screw	1
C2TY	B095	12-03		1700256	Check valve poppet	1
	B096	12-03		1700257	Check valve spring	1
	J010	12-03		1700648	Shaft, 13 tooth with auxiliary drive	1
	J020	12-03		11095329	End cap, CCW, radial ports, gen. 2, JRL	1
	J030	12-03		5000181 (9007314-1210)	Screw	4
	J050	12-03		9004700-1907	Pin	1
	J110	12-03		4460586	Cover plate	1
	J120	12-03		4800482	A pad seal	1
	J130	12-03		9007200-3712	Screw	2
	J140	12-03		1700731	Coupling, 11 tooth	1
	J150	12-03		4800754	Lifting bracket	1
	J155	12-03		9007315-0604	Screw	1

Shaft, auxiliary flange and end cap

(C2VE)

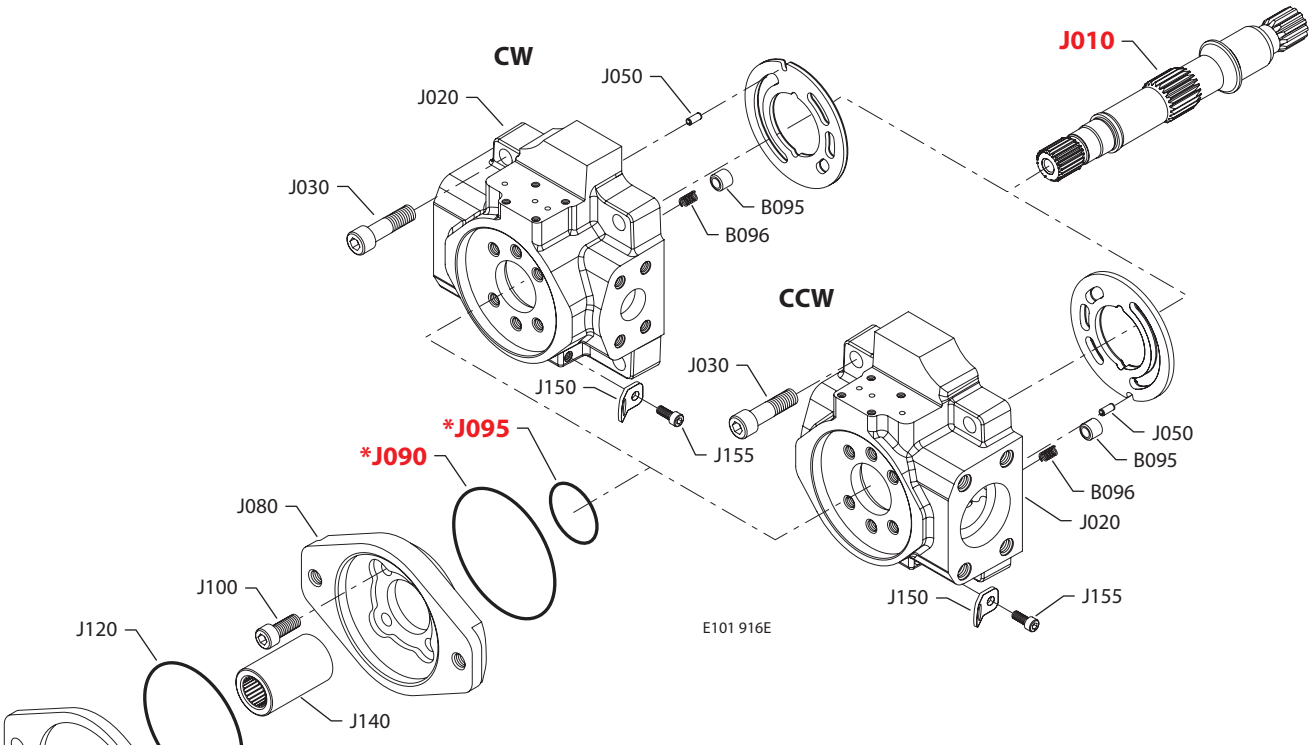

(C3A2)

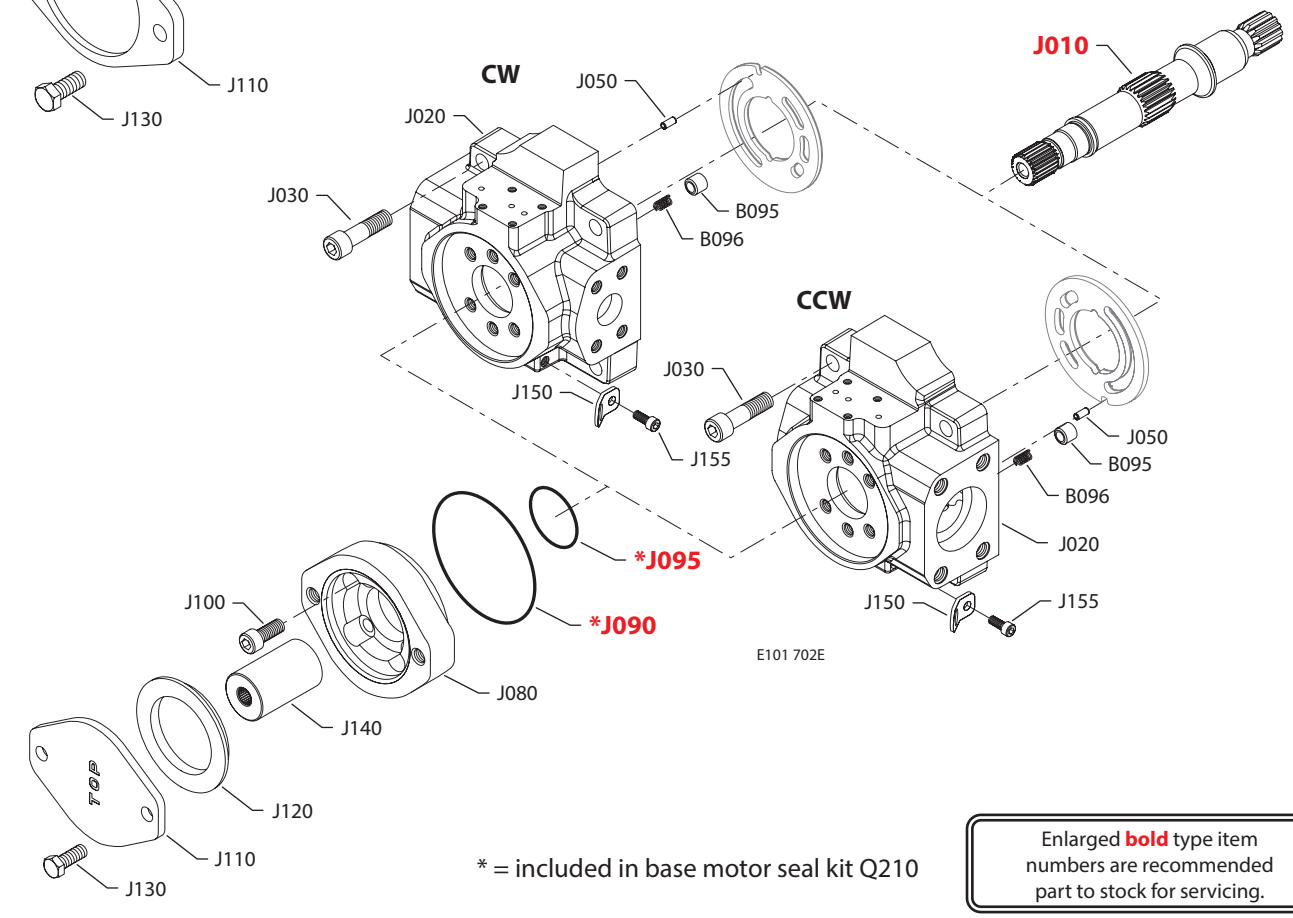

* = included in base motor seal kit Q210

Enlarged **bold** type item numbers are recommended part to stock for servicing.

Shaft, auxiliary flange and end cap

Shaft/auxiliary flange/end cap

Order code	Item	Date begin	Date end	Part number	Part name	Qty. per model/kit
C2VE	B095	11-45		1700256	Check valve poppet	1
	B096	11-45		1700257	Check valve spring	1
	J010	11-45		1700648	Shaft, 13 tooth with auxiliary drive	1
	J020	11-45		11092368	End cap, CW, radial ports, gen. 2, JRR	1
	J020	11-45		11086934	End cap, CCW, radial ports, gen. 2, JRL	1
	J030	11-45		5000181 (9007314-1210)	Screw	4
	J050	11-45		9004700-1907	Pin	1
	J080	11-45		4570210	Flange adapter, B pad	1
	J090	11-45		5000099 (9004100-1550)	O-ring	1
	J095	11-45		545434 (9004100-0420)	O-ring	1
	J100	11-45		5000489	Screw	4
	J110	11-45		4460370	Cover plate	1
	J120	11-45		680892 (9004104-0440)	O-ring	1
	J130	11-45		9007200-5021	Screw	2
	J140	11-45		1701188	Coupling, 15 tooth	1
	J150	11-45		4800754	Lifting bracket	1
	J155	11-45		9007315-0604	Screw	1
C3A2	B095	08-25	15-34	1700256	Check valve poppet	1
	B096	08-25	15-34	1700257	Check valve spring	1
	J010	08-25	15-34	1700596	Shaft, 15 tooth with auxiliary drive	1
	J020	08-25	15-34	11077600	End cap, CW, radial ports, gen. 1, JRR (SB-2010-002)	1
	J020	08-25	15-34	11077606	End cap, CCW, radial ports, gen. 1, JRL (SB-2010-002)	1
	J030	08-25	15-34	5000181 (9007314-1210)	Screw	4
	J050	08-25	15-34	9004700-1907	Pin	1
	J080	08-25	15-34	4570289	Flange adapter, A pad	1
	J090	08-25	15-34	5000099 (9004100-1550)	O-ring	1
	J095	08-25	15-34	545434 (9004100-0420)	O-ring	1
	J100	08-25	15-34	5000489	Screw	4
	J110	08-25	15-34	4460586	Cover plate	1
	J120	08-25	15-34	4800482	A pad seal	1
	J130	08-25	15-34	9007200-3712	Screw	2
	J140	08-25	15-34	1701185	Coupling, 9 tooth	1
	J150	08-25	15-34	4800754	Lifting bracket	1
	J155	08-25	15-34	9007315-0604	Screw	1

Shaft, auxiliary flange and end cap

(C3AA)

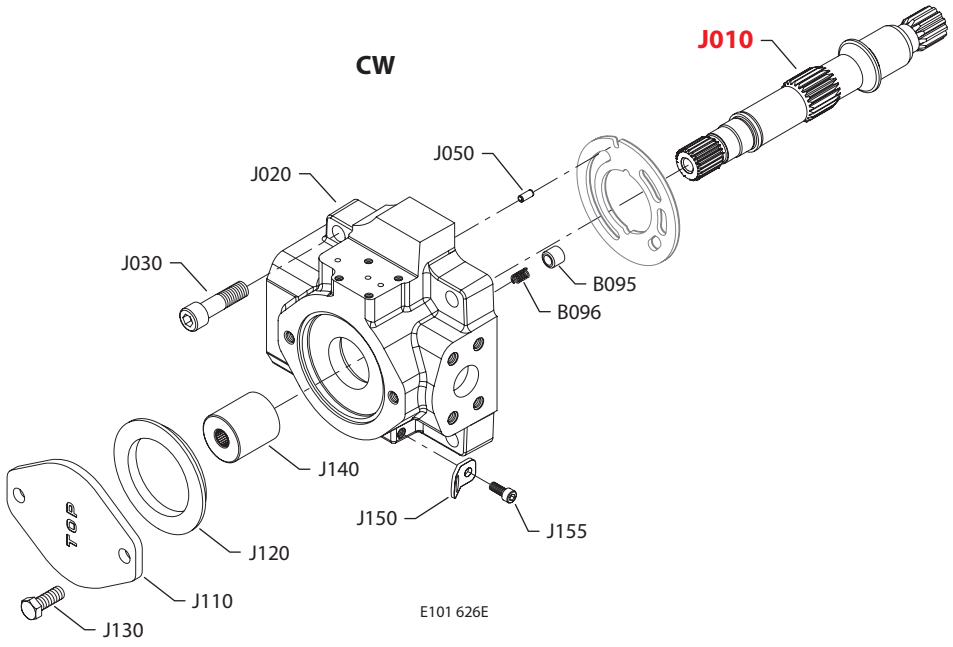

(C3AE)

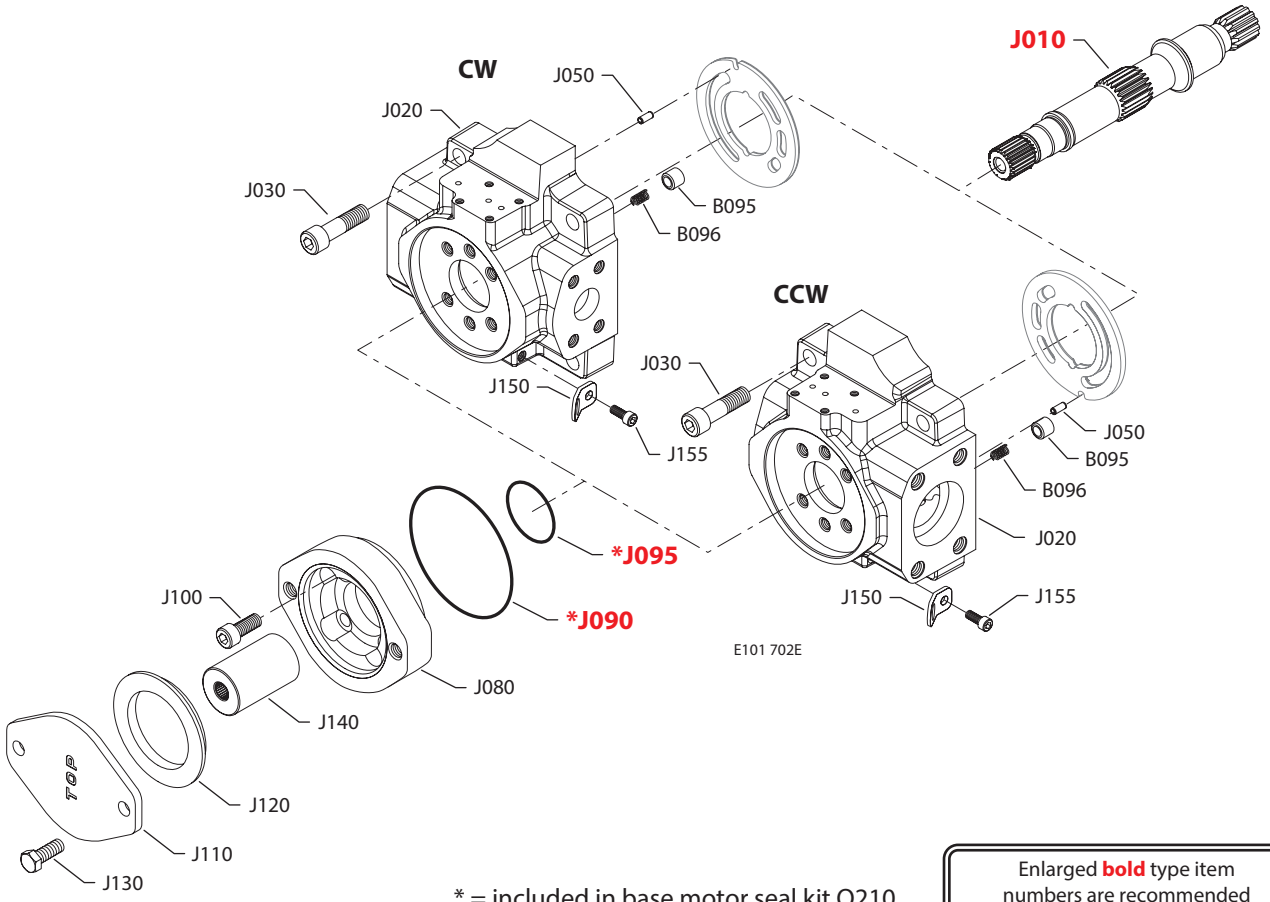

* = included in base motor seal kit Q210

Enlarged **bold** type item numbers are recommended part to stock for servicing.

Shaft, auxiliary flange and end cap

Shaft/auxiliary flange/end cap

Order code	Item	Date begin	Date end	Part number	Part name	Qty. per model/kit
C3AA	B095	03-23	15-37	1700256	Check valve poppet	1
	B096	03-23	15-37	1700257	Check valve spring	1
	J010	03-23	15-37	1700596	Shaft, 15 tooth with auxiliary drive	1
	J020	03-23	15-37	11077601	End cap, CW, radial ports, gen. 1, JRR (SB-2010-002)	1
	J030	03-23	15-37	5000181 (9007314-1210)	Screw	4
	J050	03-23	15-37	9004700-1907	Pin	1
	J110	03-23	15-37	4460586	Cover plate	1
	J120	03-23	15-37	4800482	A pad seal	1
	J130	03-23	15-37	9007200-3712	Screw	2
	J140	03-23	15-37	4570356	Coupling, 9 tooth, short	1
	J150	03-23	15-37	4800754	Lifting bracket	1
	J155	03-23	15-37	9007315-0604	Screw	1
C3AE	B095	08-25		1700256	Check valve poppet	1
	B096	08-25		1700257	Check valve spring	1
	J010	08-25		1700596	Shaft, 15 tooth with auxiliary drive	1
	J020	08-25		11092368	End cap, CW, radial ports, gen. 2, JRR (SB-2010-002)	1
	J020	08-25		11086934	End cap, CCW, radial ports, gen. 2, JRL (SB-2010-002)	1
	J030	08-25		5000181 (9007314-1210)	Screw	4
	J050	08-25		9004700-1907	Pin	1
	J080	08-25		4570289	Flange adapter, A pad	1
	J090	08-25		5000099 (9004100-1550)	O-ring	1
	J095	08-25		545434 (9004100-0420)	O-ring	1
	J100	08-25		5000489	Screw	4
	J110	08-25		4460586	Cover plate	1
	J120	08-25		4800482	A pad seal	1
	J130	08-25		9007200-3712	Screw	2
	J140	08-25		1701185	Coupling, 9 tooth	1
	J150	08-25		4800754	Lifting bracket	1
	J155	08-25		9007315-0604	Screw	1

Shaft, auxiliary flange and end cap

(C3AF)

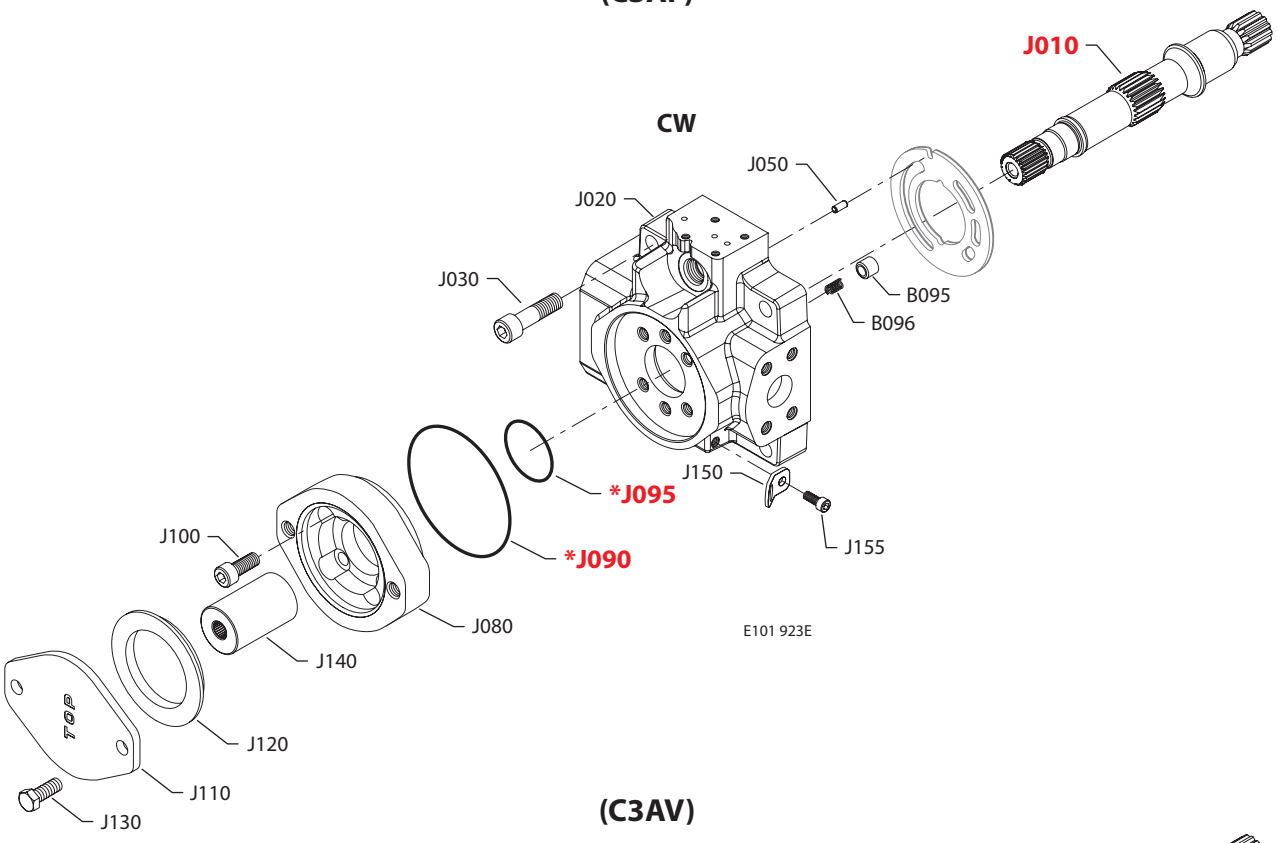

(C3AV)

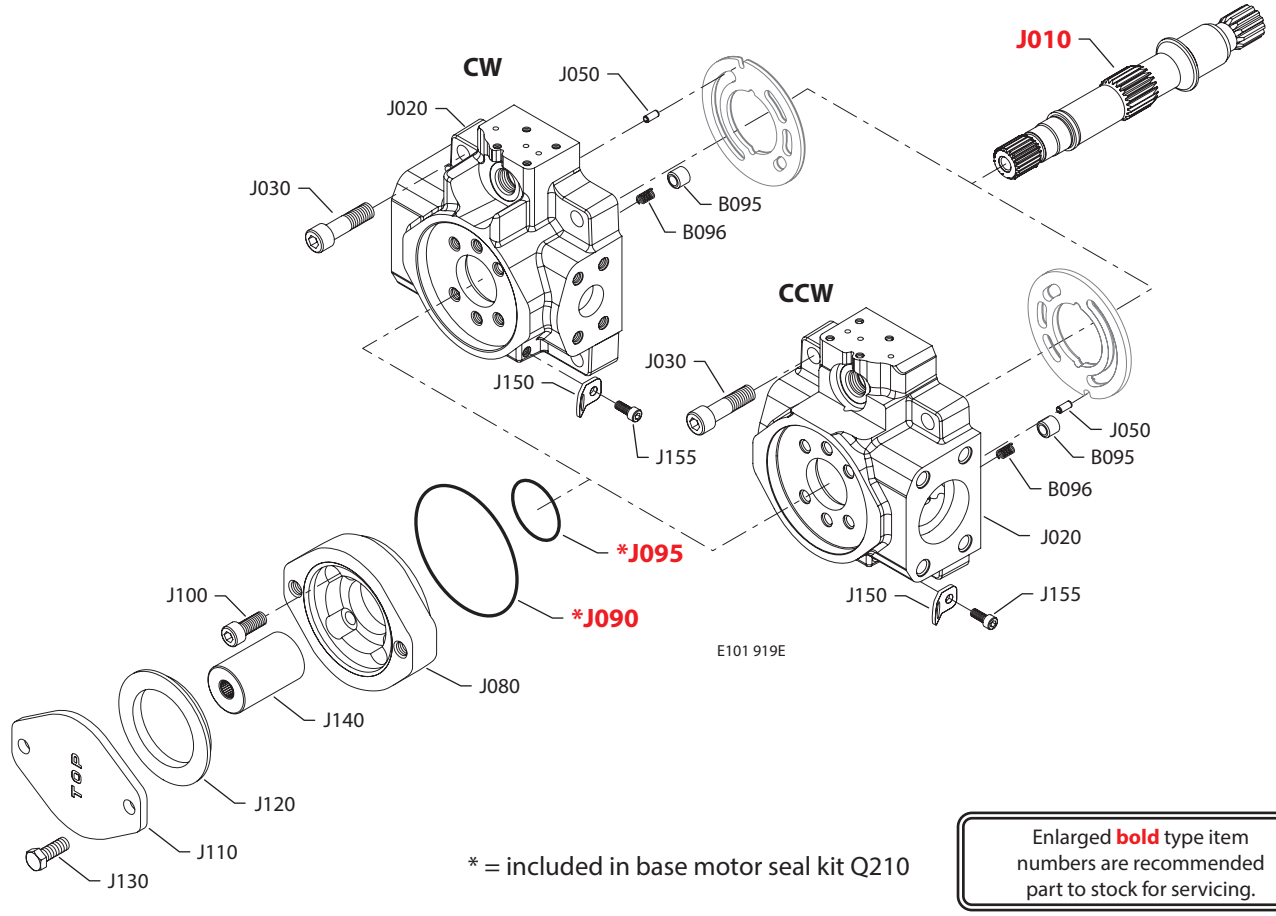

* = included in base motor seal kit Q210

Enlarged **bold** type item numbers are recommended part to stock for servicing.

Shaft, auxiliary flange and end cap

Shaft/auxiliary flange/end cap

Order code	Item	Date begin	Date end	Part number	Part name	Qty. per model/kit
C3AF	B095	08-25		1700256	Check valve poppet	1
	B096	08-25		1700257	Check valve spring	1
	J010	08-25		1700596	Shaft, 15 tooth with auxiliary drive	1
	J020	08-25		11095327	End cap, CW, radial ports, DL, gen. 2, JRR	1
	J030	08-25		5000181 (9007314-1210)	Screw	4
	J050	08-25		9004700-1907	Pin	1
	J080	08-25		4570289	Flange adapter, A pad	1
	J090	08-25		5000099 (9004100-1550)	O-ring	1
	J095	08-25		545434 (9004100-0420)	O-ring	1
	J100	08-25		5000489	Screw	4
	J110	08-25		4460586	Cover plate	1
	J120	08-25		4800482	A pad seal	1
	J130	08-25		9007200-3712	Screw	2
	J140	08-25		1701185	Coupling, 9 tooth	1
	J150	08-25		4800754	Lifting bracket	1
	J155	08-25		9007315-0604	Screw	1
C3AV	B095	08-25	15-37	1700256	Check valve poppet	1
	B096	08-25	15-37	1700257	Check valve spring	1
	J010	08-25	15-37	1700596	Shaft, 15 tooth with auxiliary drive	1
	J020	08-25	15-37	11077604	End cap, CW, radial ports, DL, gen. 1, JRR (SB-2010-002)	1
	J020	08-25	15-37	11077608	End cap, CCW, radial ports, DL,gen. 1, JRL (SB-2010-002)	1
	J030	08-25	15-37	5000181 (9007314-1210)	Screw	4
	J050	08-25	15-37	9004700-1907	Pin	1
	J080	08-25	15-37	4570289	Flange adapter, A pad	1
	J090	08-25	15-37	5000099 (9004100-1550)	O-ring	1
	J095	08-25	15-37	545434 (9004100-0420)	O-ring	1
	J100	08-25	15-37	5000489	Screw	4
	J110	08-25	15-37	4460586	Cover plate	1
	J120	08-25	15-37	4800482	A pad seal	1
	J130	08-25	15-37	9007200-3712	Screw	2
	J140	08-25	15-37	1701185	Coupling, 9 tooth	1
	J150	08-25	15-37	4800754	Lifting bracket	1
	J155	08-25	15-37	9007315-0604	Screw	1

Shaft, auxiliary flange and end cap

(C3AX)

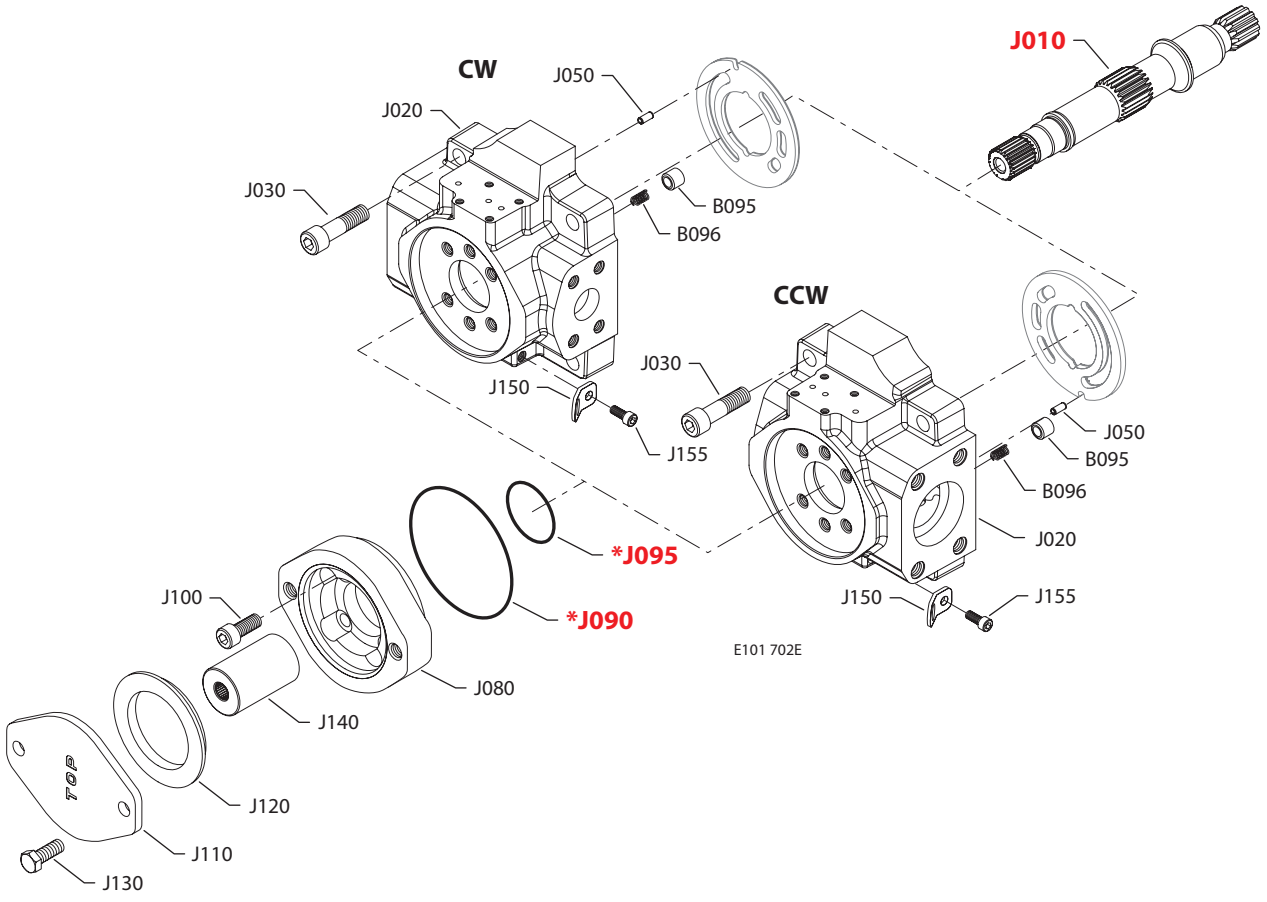

(C3AY)

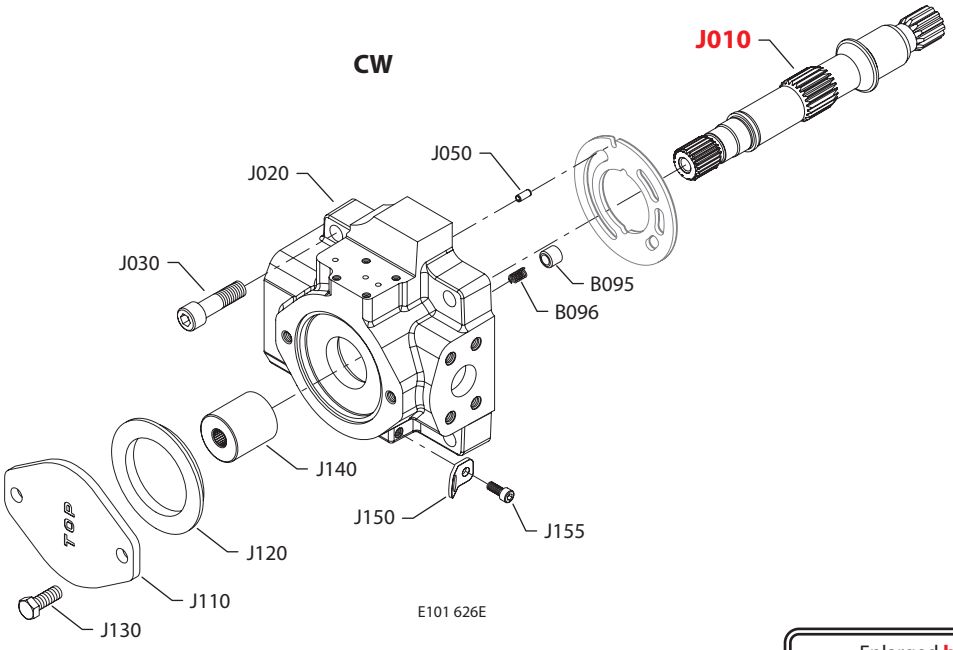

* = included in base motor seal kit Q210

Enlarged **bold** type item numbers are recommended part to stock for servicing.

Shaft, auxiliary flange and end cap

Shaft/auxiliary flange/end cap

Order code	Item	Date begin	Date end	Part number	Part name	Qty. per model/kit
C3AX	B095	03-23		1700256	Check valve poppet	1
	B096	03-23		1700257	Check valve spring	1
	J010	03-23		1700596	Shaft, 15 tooth with auxiliary drive	1
	J020	03-23		11106867	End cap, CW, radial ports, gen. 2, JRR	1
	J020	03-23		11106847	End cap, CCW, radial ports, gen. 2, JRL	1
	J030	03-23		5000181 (9007314-1210)	Screw	4
	J050	03-23		9004700-1907	Pin	1
	J080	03-23		4570289	Flange adapter, A pad	1
	J090	03-23		5000099 (9004100-1550)	O-ring	1
	J095	03-23		545434 (9004100-0420)	O-ring	1
	J100	03-23		5000489	Screw	4
	J110	03-23		4460586	Cover plate	1
	J120	03-23		4800482	O-ring	1
	J130	03-23		9007200-3712	Screw	2
	J140	03-23		1701185	Coupling, 9 tooth	1
	J150	03-23		4800754	Lifting bracket	1
	J155	03-23		9007315-0604	Screw	1
C3AY	B095	03-23		1700256	Check valve poppet	1
	B096	03-23		1700257	Check valve spring	1
	J010	03-23		1700596	Shaft, 15 tooth with auxiliary drive	1
	J020	03-23		11091564	End cap, CW, radial ports, gen. 2, JRR	1
	J030	03-23		5000181 (9007314-1210)	Screw	4
	J050	03-23		9004700-1907	Pin	1
	J110	03-23		4460586	Cover plate	1
	J120	03-23		4800482	A pad seal	1
	J130	03-23		9007200-3712	Screw	2
	J140	03-23		4570356	Coupling, 9 tooth, short	1
	J150	03-23		4800754	Lifting bracket	1
	J155	03-23		9007315-0604	Screw	1

Shaft, auxiliary flange and end cap

(C3B2 & C3B5)

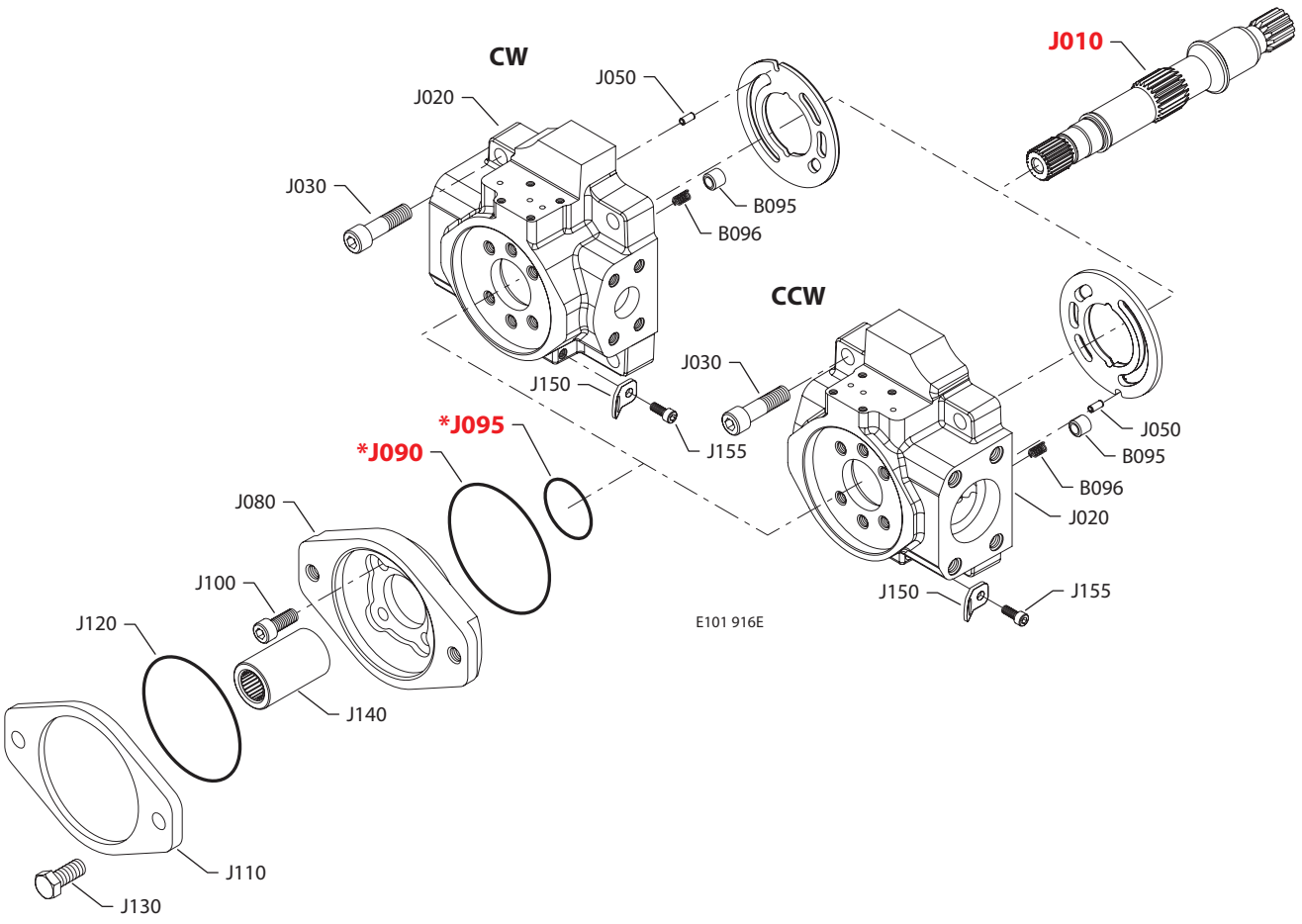

* = included in base motor seal kit Q210

Enlarged **bold** type item numbers are recommended part to stock for servicing.

Shaft, auxiliary flange and end cap

Shaft/auxiliary flange/end cap

Order code	Item	Date begin	Date end	Part number	Part name	Qty. per model/kit
C3B2	B095	03-23	15-34	1700256	Check valve poppet	1
	B096	03-23	15-34	1700257	Check valve spring	1
	J010	03-23	15-34	1700596	Shaft, 15 tooth with auxiliary drive	1
	J020	03-23	15-34	11077600	End cap, CW, radial ports, gen. 1, JRR (SB-2010-002)	1
	J020	03-23	15-34	11077606	End cap, CCW, radial ports, gen. 1, JRL (SB-2010-002)	1
	J030	03-23	15-34	9007314-1210	Screw	4
	J050	03-23	15-34	9004700-1907	Pin	1
	J080	03-23	15-34	4570210	Flange adapter, B pad	1
	J090	03-23	15-34	5000099 (9004100-1550)	O-ring	1
	J095	03-23	15-34	545434 (9004100-0420)	O-ring	1
	J100	03-23	15-34	5000489	Screw	4
	J110	03-23	15-34	4460370	Cover plate	1
	J120	03-23	15-34	9004104-0440	O-ring	1
	J130	03-23	15-34	9007200-5021	Screw	2
	J140	03-23	15-34	1701187	Coupling, 13 tooth	1
	J150	03-23	15-34	4800754	Lifting bracket	1
	J155	03-23	15-34	9007315-0604	Screw	1
C3B5	B095	03-23	15-39	1700256	Check valve poppet	1
	B096	03-23	15-39	1700257	Check valve spring	1
	J010	03-23	15-39	1700596	Shaft, 15 tooth with auxiliary drive	1
	J020	03-23	15-39	11077612	End cap, CW, radial ports, gen. 1, JRR (SB-2010-002)	1
	J030	03-23	15-39	5000181 (9007314-1210)	Screw	4
	J050	03-23	15-39	9004700-1907	Pin	1
	J080	03-23	15-39	4570210	Flange adapter, B pad	1
	J090	03-23	15-39	5000099 (9004100-1550)	O-ring	1
	J095	03-23	15-39	545434 (9004100-0420)	O-ring	1
	J100	03-23	15-39	5000489	Screw	4
	J110	03-23	15-39	4460370	Cover plate	1
	J120	03-23	15-39	9004104-0440	O-ring	1
	J130	03-23	15-39	9007200-5021	Screw	2
	J140	03-23	15-39	1701187	Coupling, 13 tooth	1
	J150	03-23	15-39	4800754	Lifting bracket	1
	J155	03-23	15-39	9007315-0604	Screw	1

Shaft, auxiliary flange and end cap

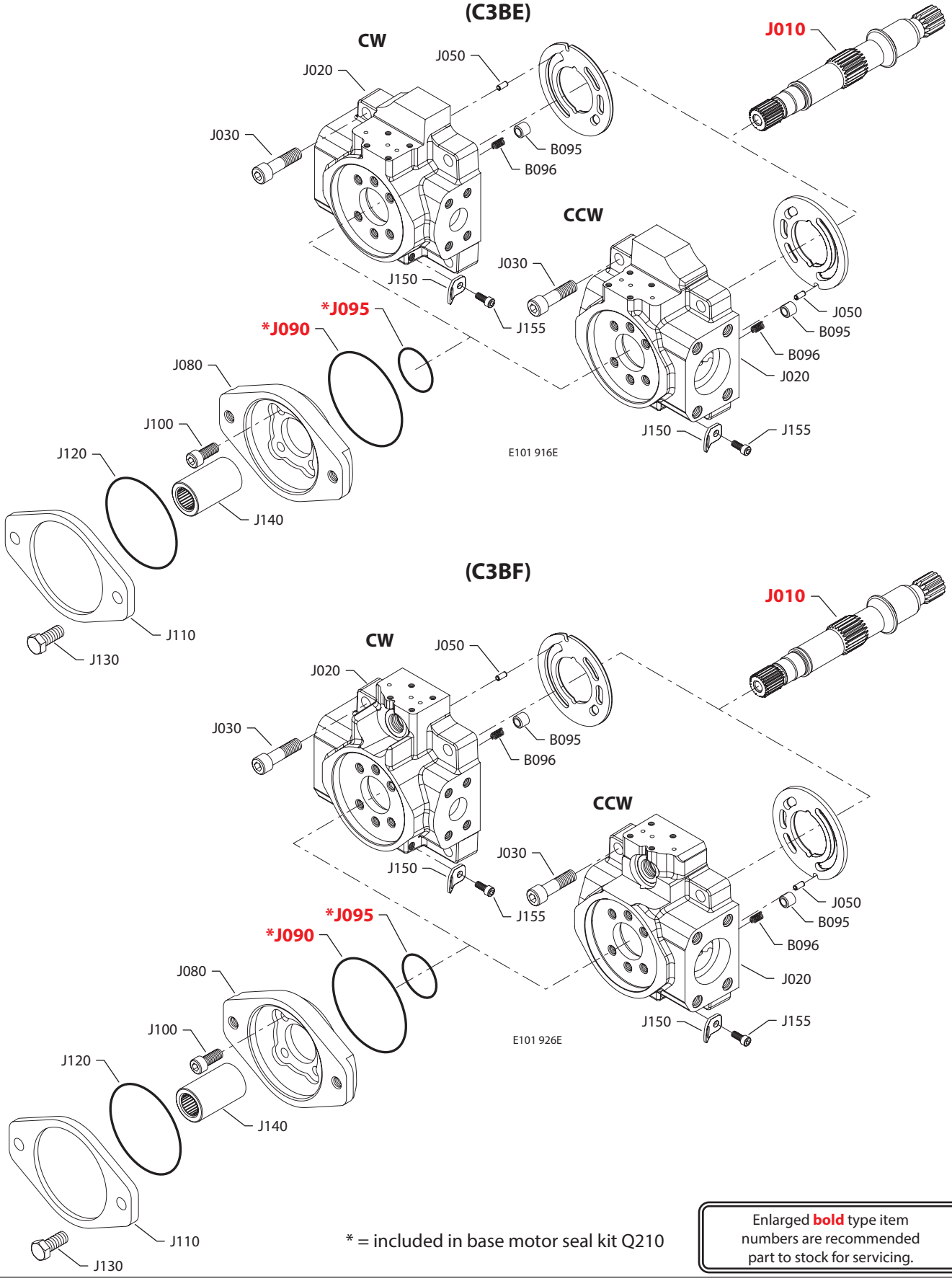

* = included in base motor seal kit Q210

Enlarged **bold** type item numbers are recommended part to stock for servicing.

Shaft, auxiliary flange and end cap

Shaft/auxiliary flange/end cap

Order code	Item	Date begin	Date end	Part number	Part name	Qty. per model/kit
C3BE	B095	11-45		1700256	Check valve poppet	1
	B096	11-45		1700257	Check valve spring	1
	J010	11-45		1700596	Shaft, 15 tooth with auxiliary drive	1
	J020	11-45		11092368	End cap, CW, radial ports, gen. 2, JRR	1
	J020	11-45		11086934	End cap, CCW, radial ports, gen. 2, JRL	1
	J030	11-45		5000181 (9007314-1210)	Screw	4
	J050	11-45		9004700-1907	Pin	1
	J080	11-45		4570210	Flange adapter, B pad	1
	J090	11-45		5000099 (9004100-1550)	O-ring	1
	J095	11-45		545434 (9004100-0420)	O-ring	1
	J100	11-45		5000489	Screw	4
	J110	11-45		4460370	Cover plate	1
	J120	11-45		9004104-0440	O-ring	1
	J130	11-45		9007200-5021	Screw	2
	J140	11-45		1701187	Coupling, 13 tooth	1
	J150	11-45		4800754	Lifting bracket	1
	J155	11-45		9007315-0604	Screw	1
C3BF	B095	11-47		1700256	Check valve poppet	1
	B096	11-47		1700257	Check valve spring	1
	J010	11-47		1700596	Shaft, 15 tooth with auxiliary drive	1
	J020	11-47		11095327	End cap, CW, radial ports, DL, gen. 2, JRR	1
	J020	11-47		11086919	End cap, CCW, radial ports, DL, gen. 2, JRL	1
	J030	11-47		5000181 (9007314-1210)	Screw	4
	J050	11-47		9004700-1907	Pin	1
	J080	11-47		4570210	Flange adapter, B pad	1
	J090	11-47		5000099 (9004100-1550)	O-ring	1
	J095	11-47		545434 (9004100-0420)	O-ring	1
	J100	11-47		5000489	Screw	4
	J110	11-47		4460370	Cover plate	1
	J120	11-47		9004104-0440	O-ring	1
	J130	11-47		9007200-5021	Screw	2
	J140	11-47		1701187	Coupling, 13 tooth	1
	J150	11-47		4800754	Lifting bracket	1
	J155	11-47		9007315-0604	Screw	1

Shaft, auxiliary flange and end cap

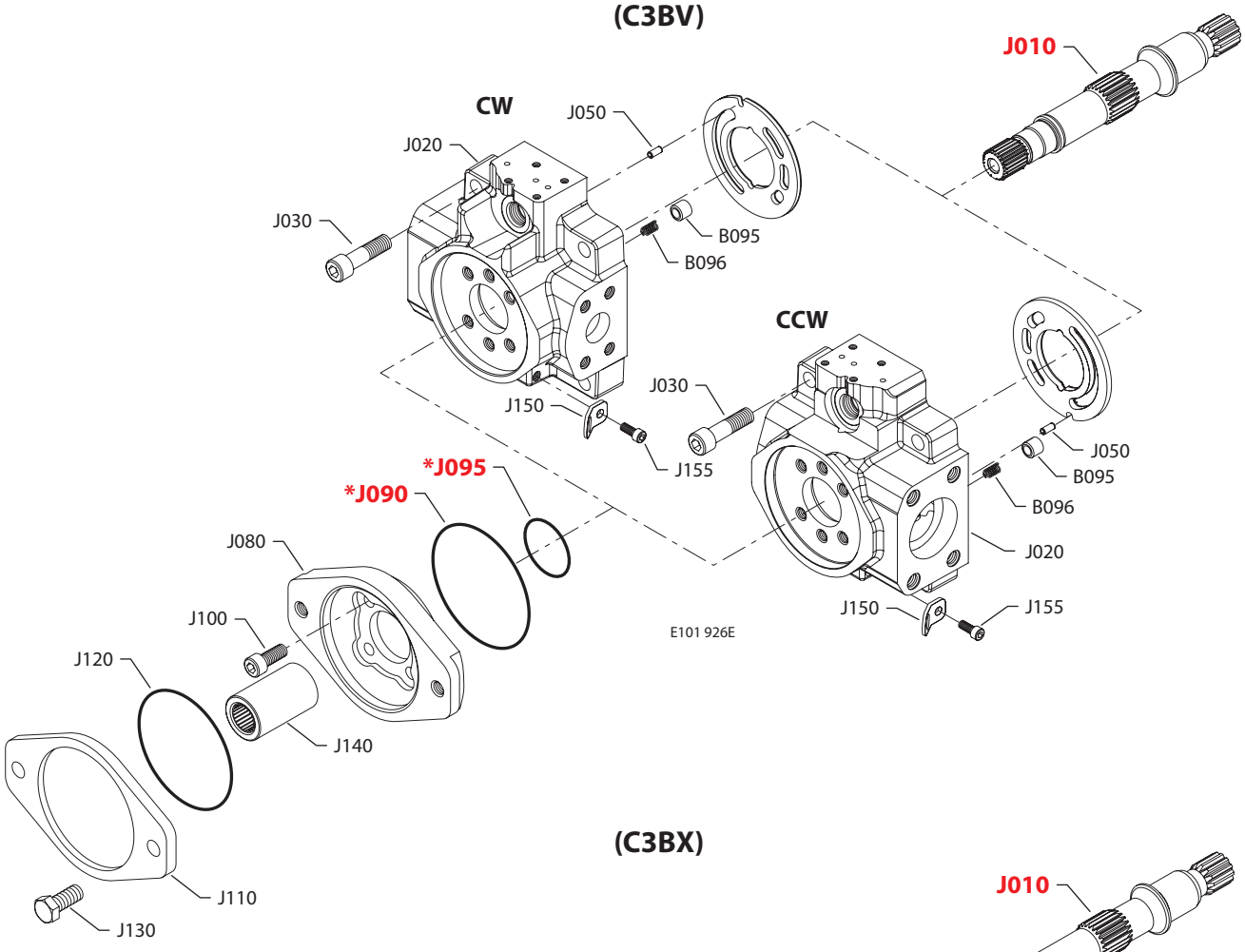

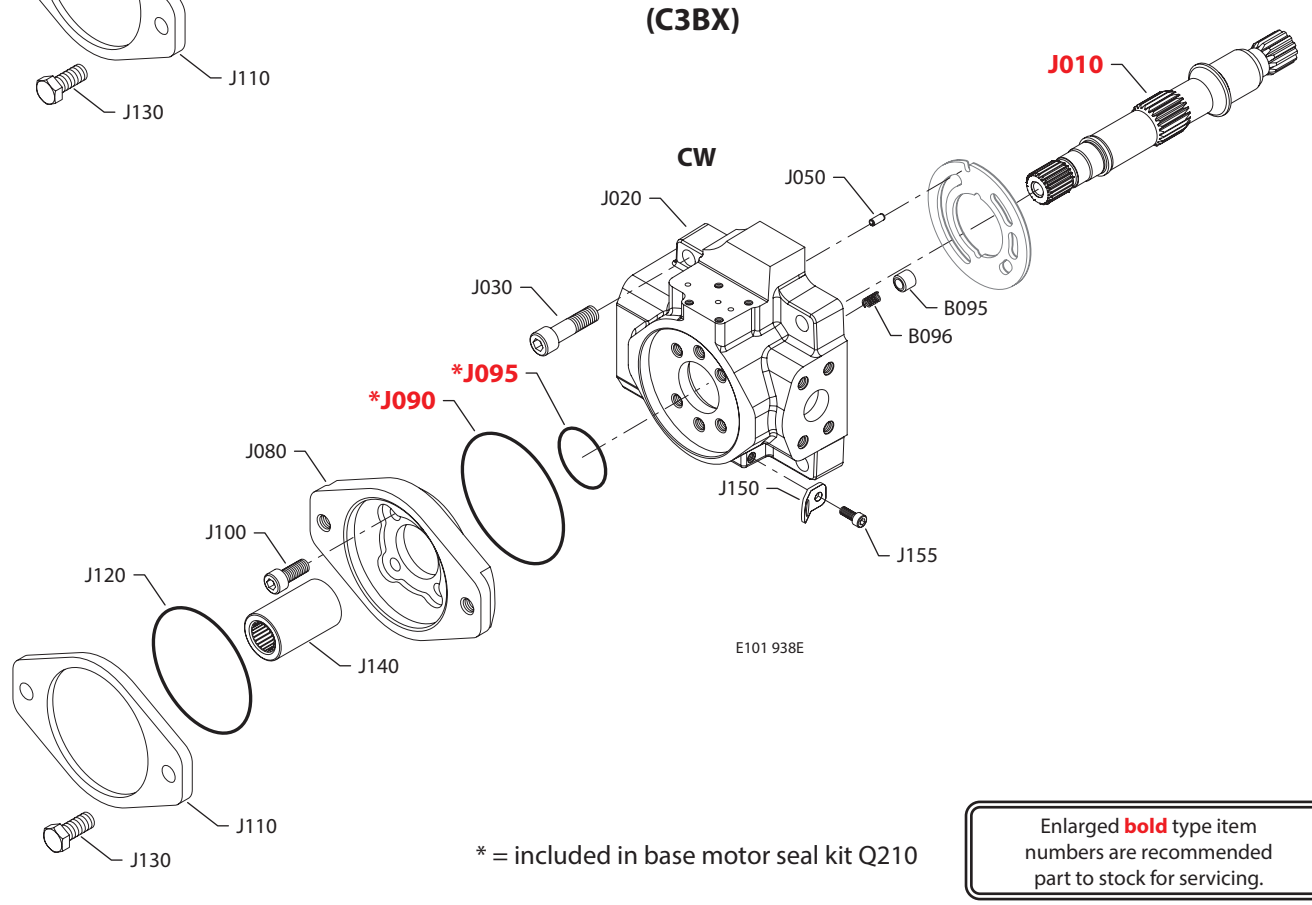

* = included in base motor seal kit Q210

Enlarged **bold** type item numbers are recommended part to stock for servicing.

Shaft, auxiliary flange and end cap

Shaft/auxiliary flange/end cap

Order code	Item	Date begin	Date end	Part number	Part name	Qty. per model/kit
C3BV	B095	12-28	15-37	1700256	Check valve poppet	1
	B096	12-28	15-37	1700257	Check valve spring	1
	J010	12-28	15-37	1700596	Shaft, 15 tooth with auxiliary drive	1
	J020	11-47	15-37	11077604	End cap, CW, radial ports, DL, gen. 1, JRR (SB-2010-002)	1
	J020	11-47	15-37	11077608	End cap, CCW, radial ports, DL, gen. 1, JRL (SB-2010-002)	1
	J030	12-28	15-37	5000181 (9007314-1210)	Screw	4
	J050	12-28	15-37	9004700-1907	Pin	1
	J080	12-28	15-37	4570210	Flange adapter, B pad	1
	J090	12-28	15-37	5000099 (9004100-1550)	O-ring	1
	J095	12-28	15-37	545434 (9004100-0420)	O-ring	1
	J100	12-28	15-37	5000489	Screw	4
	J110	12-28	15-37	4460370	Cover plate	1
	J120	12-28	15-37	9004104-0440	O-ring	1
	J130	12-28	15-37	9007200-5021	Screw	2
	J140	12-28	15-37	1701187	Coupling, 13 tooth	1
	J150	12-28	15-37	4800754	Lifting bracket	1
	J155	12-28	15-37	9007315-0604	Screw	1
C3BX	B095	12-07		1700256	Check valve poppet	1
	B096	12-07		1700257	Check valve spring	1
	J010	12-07		1700596	Shaft, 15 tooth with auxiliary drive	1
	J020	12-07		11106867	End cap, CW, radial ports, gen. 2, JRR	1
	J030	12-07		5000181 (9007314-1210)	Screw	4
	J050	12-07		9004700-1907	Pin	1
	J080	12-07		4570210	Flange adapter, B pad	1
	J090	12-07		5000099 (9004100-1550)	O-ring	1
	J095	12-07		545434 (9004100-0420)	O-ring	1
	J100	12-07		5000489	Screw	4
	J110	12-07		4460370	Cover plate	1
	J120	12-07		9004104-0440	O-ring	1
	J130	12-07		9007200-5021	Screw	2
	J140	12-07		1701187	Coupling, 13 tooth	1
	J150	12-07		4800754	Lifting bracket	1
	J155	12-07		9007315-0604	Screw	1

Shaft, auxiliary flange and end cap

(C3C2 & C3CE)

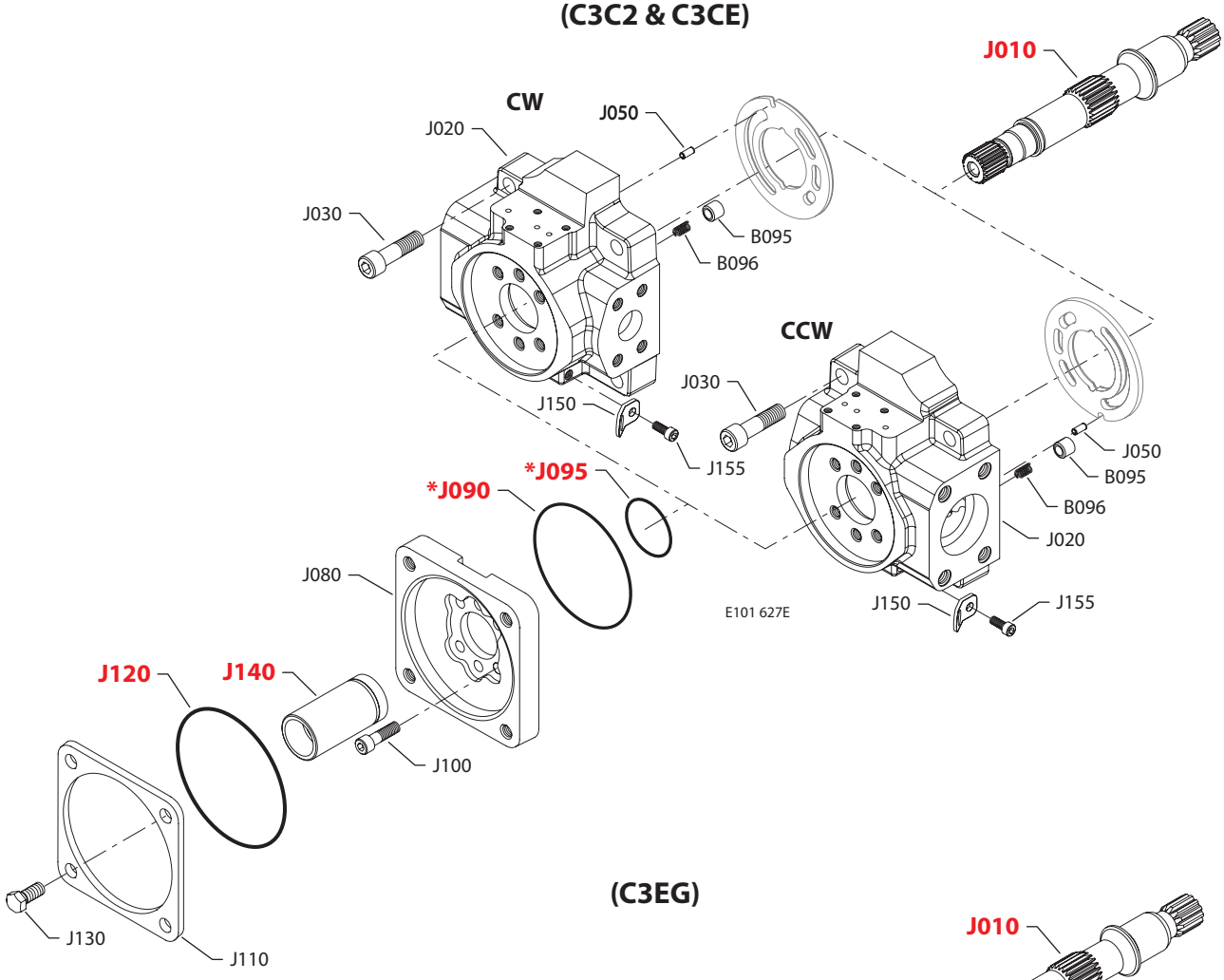

(C3EG)

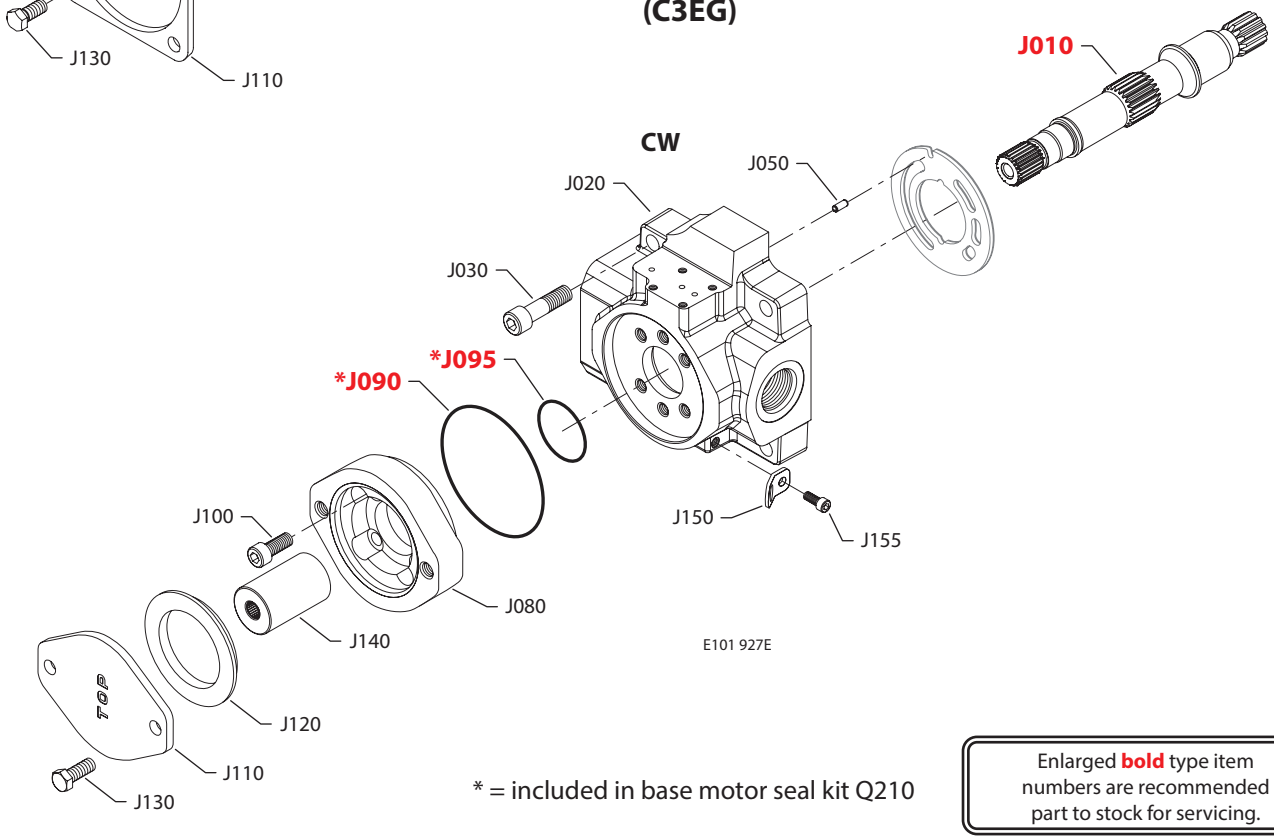

* = included in base motor seal kit Q210

Enlarged **bold** type item numbers are recommended part to stock for servicing.

Shaft, auxiliary flange and end cap

Shaft/auxiliary flange/end cap

Order code	Item	Date begin	Date end	Part number	Part name	Qty. per model/kit
C3C2	B095	03-23	15-34	1700256	Check valve poppet	1
	B096	03-23	15-34	1700257	Check valve spring	1
	J010	03-23	15-34	1700596	Shaft, 15 tooth with auxiliary drive	1
	J020	03-23	15-34	11077600	End cap, CW, radial ports, gen. 1, JRR (SB-2010-002)	1
	J020	03-23	15-34	11077606	End cap, CCW, radial ports, gen. 1, JRL (SB-2010-002)	1
	J030	03-23	15-34	5000181 (9007314-1210)	Screw	4
	J050	03-23	15-34	9004700-1907	Pin	1
	J080	03-23	15-34	11039356	Flange adapter, C pad (SB-2008-052)	1
	J090	03-23	15-34	5000099 (9004100-1550)	O-ring	1
	J095	03-23	15-34	545434 (9004100-0420)	O-ring	1
	J100	03-23	15-34	5000489	Screw	6
	J110	03-23	15-34	8800406	Cover plate	1
	J120	03-23	15-34	9004100-0480	O-ring	1
	J130	03-23	15-34	9007200-5021	Screw	4
	J140	03-23	15-34	4570133	Coupling, 14 tooth	1
	J150	03-23	15-34	4800754	Lifting bracket	1
	J155	03-23	15-34	9007315-0604	Screw	1
C3CE	B095	03-23		1700256	Check valve poppet	1
	B096	03-23		1700257	Check valve spring	1
	J010	03-23		1700596	Shaft, 15 tooth with auxiliary drive	1
	J020	03-23		11092368	End cap, CW, radial ports, gen. 2, JRR (SB-2010-002)	1
	J020	03-23		11086934	End cap, CCW, radial ports, gen. 2, JRL (SB-2010-002)	1
	J030	03-23		5000181 (9007314-1210)	Screw	4
	J050	03-23		9004700-1907	Pin	1
	J080	03-23		11039356	Flange adapter, C pad (SB-2008-052)	1
	J090	03-23		5000099 (9004100-1550)	O-ring	1
	J095	03-23		545434 (9004100-0420)	O-ring	1
	J100	03-23		5000489	Screw	6
	J110	03-23		8800406	Cover plate	1
	J120	03-23		9004100-0480	O-ring	1
	J130	03-23		9007200-5021	Screw	4
	J140	03-23		4570133	Coupling, 14 tooth	1
	J150	03-23		4800754	Lifting bracket	1
	J155	03-23		9007315-0604	Screw	1
C3EG	J010	08-29	15-39	1700596	Shaft, 15 tooth with auxiliary drive	1
	J020	08-29	15-39	11077611	End cap, CW, radial ports, gen. 1, JRR (SB-2010-002)	1
	J030	08-29	15-39	5000181 (9007314-1210)	Screw	4
	J050	08-29	15-39	9004700-1907	Pin	1
	J080	08-29	15-39	4570430	Flange adapter, A pad, metric	1
	J090	08-29	15-39	5000099 (9004100-1550)	O-ring	1
	J095	08-29	15-39	545434 (9004100-0420)	O-ring	1
	J100	08-29	15-39	5000489	Screw	4
	J110	08-29	15-39	4460586	Cover plate	1
	J120	08-29	15-39	4800482	A pad seal	1
	J130	08-29	15-39	5000622	Screw	4
	J140	08-29	15-39	1701185	Coupling, 9 tooth	1
	J150	08-29	15-39	4800754	Lifting bracket	1
	J155	08-29	15-39	9007315-0604	Screw	1

Shaft, auxiliary flange and end cap

(C3EV)

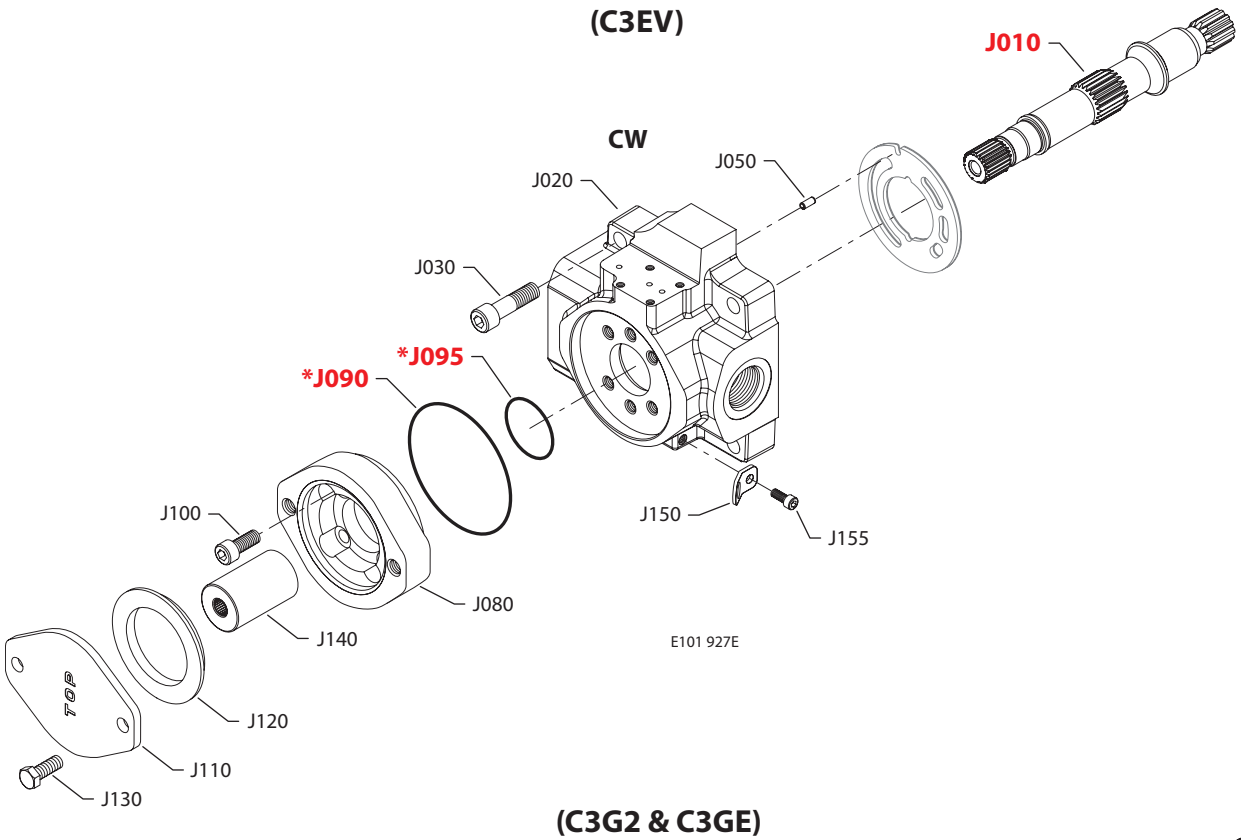

(C3G2 & C3GE)

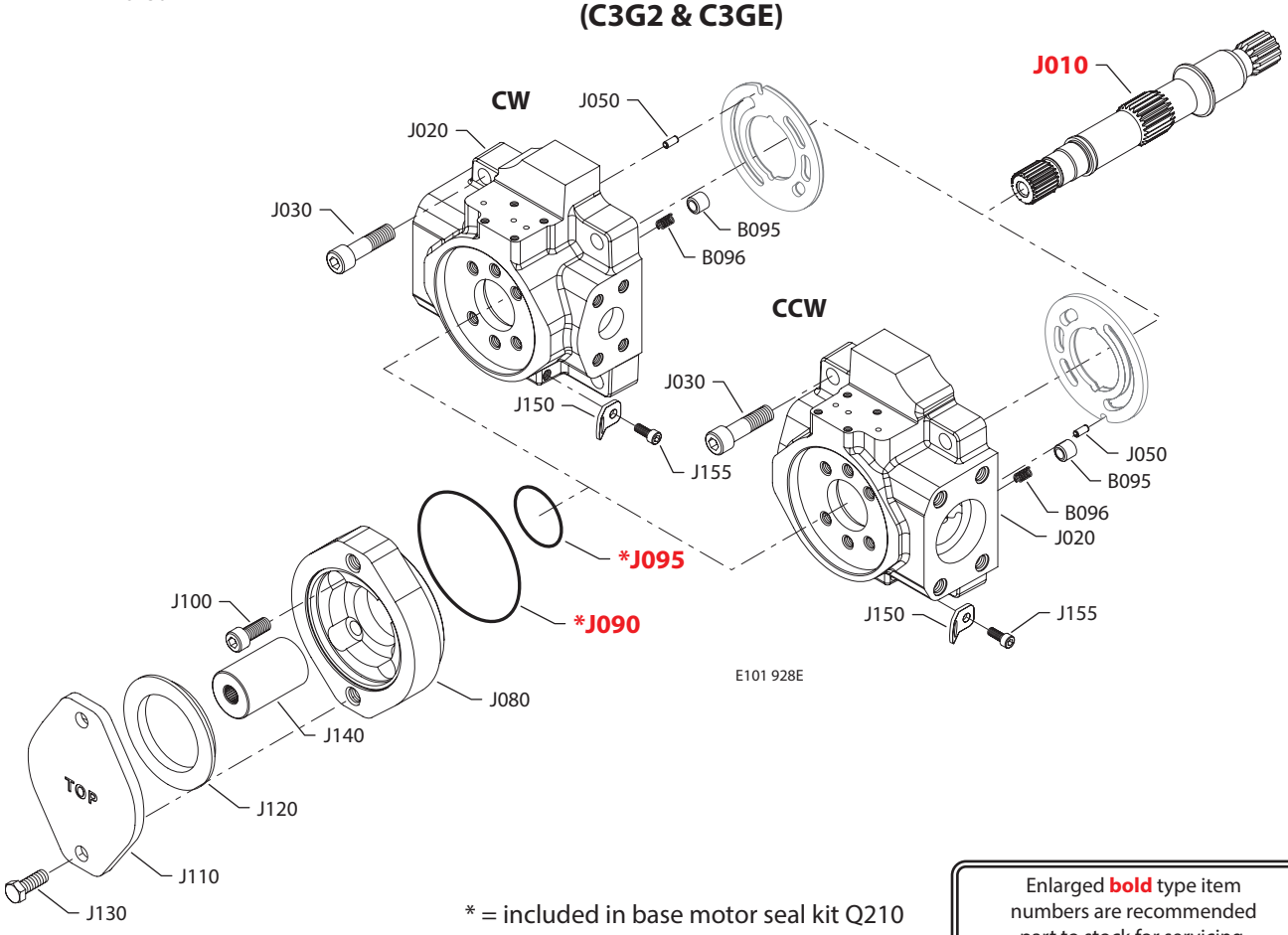

* = included in base motor seal kit Q210

Enlarged **bold** type item numbers are recommended part to stock for servicing.

Shaft, auxiliary flange and end cap

Shaft/auxiliary flange/end cap

Order code	Item	Date begin	Date end	Part number	Part name	Qty. per model/kit
C3EV	J010	12-07		1700596	Shaft, 15 tooth with auxiliary drive	1
	J020	12-07		11106871	End cap, CW, radial ports, gen. 2, JRR	1
	J030	12-07		5000181 (9007314-1210)	Screw	4
	J050	12-07		9004700-1907	Pin	1
	J080	12-07		4570430	Flange adapter, A pad, metric	1
	J090	12-07		5000099 (9004100-1550)	O-ring	1
	J095	12-07		545434 (9004100-0420)	O-ring	1
	J100	12-07		5000489	Screw	4
	J110	12-07		4460586	Cover plate	1
	J120	12-07		4800482	A pad seal	1
	J130	12-07		5000622	Screw	4
	J140	12-07		1701185	Coupling, 9 tooth	1
	J150	12-07		4800754	Lifting bracket	1
	J155	12-07		9007315-0604	Screw	1
C3G2	B095	03-23	15-39	1700256	Check valve poppet	1
	B096	03-23	15-39	1700257	Check valve spring	1
	J010	03-23	15-39	1700596	Shaft, 15 tooth with auxiliary drive	1
	J020	03-23	15-39	11077606	End cap, CCW, radial ports, gen. 1, JRL (SB-2010-002)	1
	J030	03-23	15-39	5000181 (9007314-1210)	Screw	4
	J050	03-23	15-39	9004700-1907	Pin	1
	J080	03-23	15-39	4570289	Flange adapter, A pad	1
	J090	03-23	15-39	5000099 (9004100-1550)	O-ring	1
	J095	03-23	15-39	545434 (9004100-0420)	O-ring	1
	J100	03-23	15-39	5000489	Screw	4
	J110	03-23	15-39	4460586	Cover plate	1
	J120	03-23	15-39	4800482	A pad seal	1
	J130	03-23	15-39	9007200-3712	Screw	4
	J140	03-23	15-39	1701186	Coupling, 11 tooth	1
	J150	03-23	15-39	4800754	Lifting bracket	1
	J155	03-23	15-39	9007315-0604	Screw	1
C3GE	B095	11-41		1700256	Check valve poppet	1
	B096	11-41		1700257	Check valve spring	1
	J010	11-41		1700596	Shaft, 15 tooth with auxiliary drive	1
	J020	11-41		11092368	End cap, CW, radial ports, gen. 2, JRR	1
	J020	11-41		11086934	End cap, CCW, radial ports, gen. 2, JRL	1
	J030	11-41		5000181 (9007314-1210)	Screw	4
	J050	11-41		9004700-1907	Pin	1
	J080	11-41		4570289	Flange adapter, A pad	1
	J090	11-41		5000099 (9004100-1550)	O-ring	1
	J095	11-41		545434 (9004100-0420)	O-ring	1
	J100	11-41		5000489	Screw	4
	J110	11-41		4460586	Cover plate	1
	J120	11-41		4800482	A pad seal	1
	J130	11-41		9007200-3712	Screw	4
	J140	11-41		1701186	Coupling, 11 tooth	1
	J150	11-41		4800754	Lifting bracket	1
	J155	11-41		9007315-0604	Screw	1

Shaft, auxiliary flange and end cap

(C3GF & C3GV)

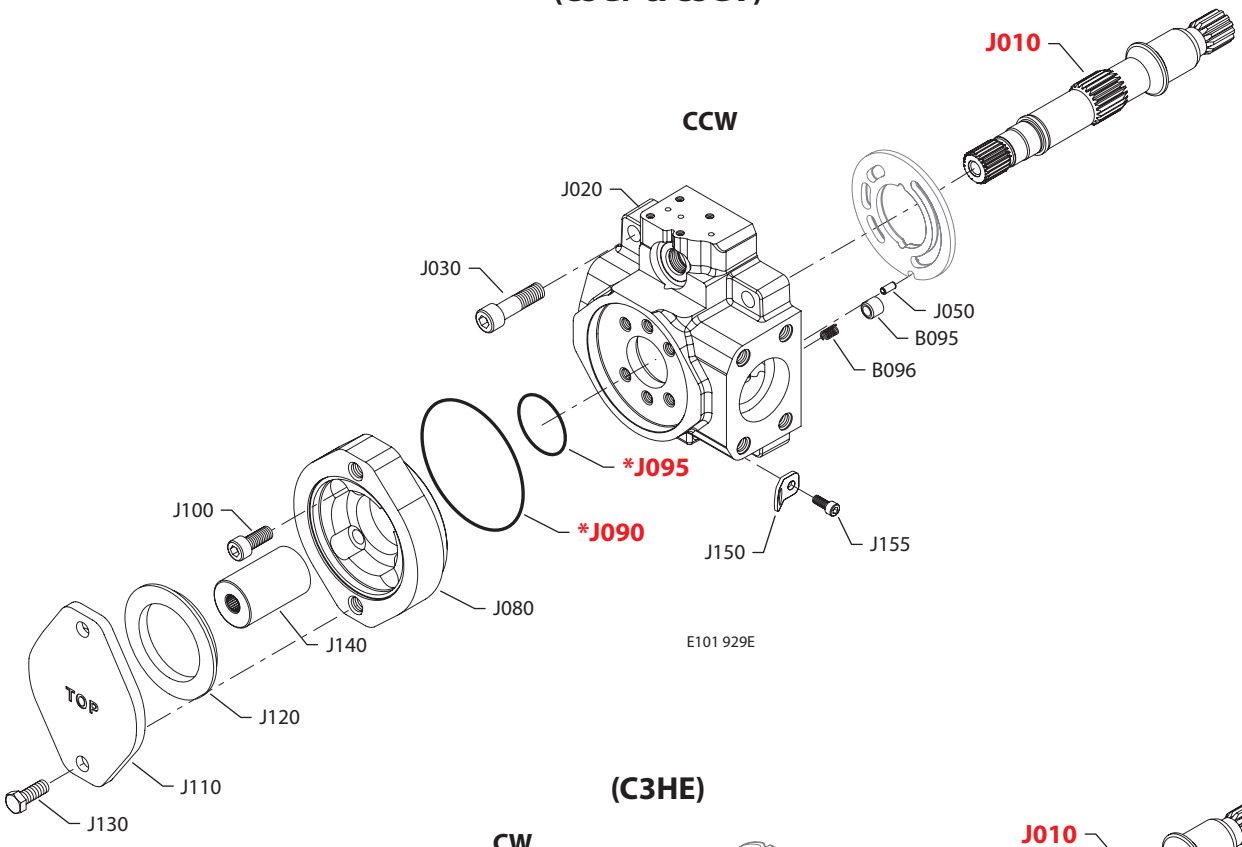

(C3HE)

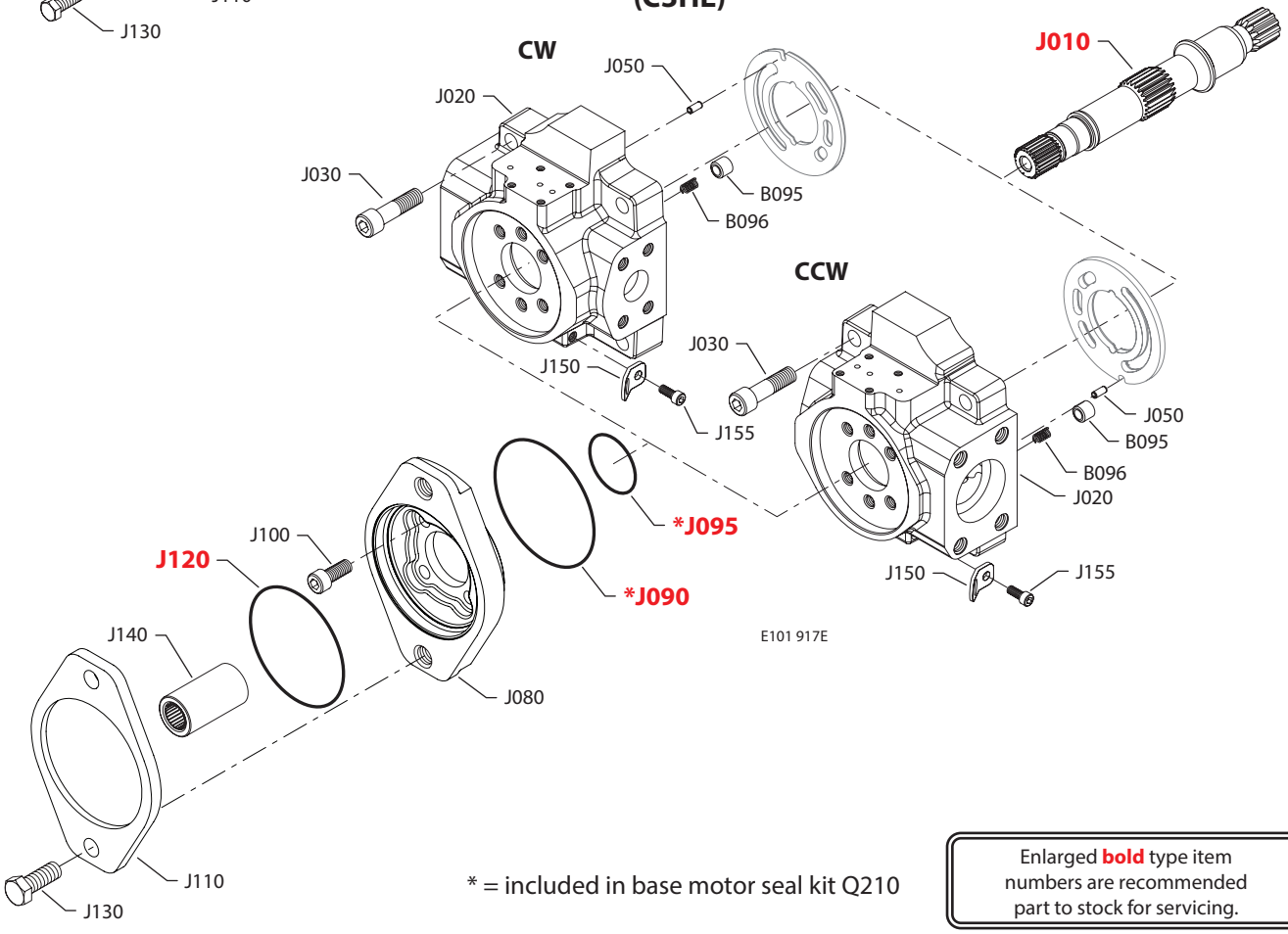

* = included in base motor seal kit Q210

Enlarged **bold** type item numbers are recommended part to stock for servicing.

Shaft, auxiliary flange and end cap

Shaft/auxiliary flange/end cap

Order code	Item	Date begin	Date end	Part number	Part name	Qty. per model/kit
C3GF	B095	03-23		1700256	Check valve poppet	1
	B096	03-23		1700257	Check valve spring	1
	J010	03-23		1700596	Shaft, 15 tooth with auxiliary drive	1
	J020	03-23		11086919	End cap, CCW, radial ports, DL, gen. 2, JRL (SB-2010-002)	1
	J030	03-23		5000181 (9007314-1210)	Screw	4
	J050	03-23		9004700-1907	Pin	1
	J080	03-23		4570289	Flange adapter, A pad	1
	J090	03-23		5000099 (9004100-1550)	O-ring	1
	J095	03-23		545434 (9004100-0420)	O-ring	1
	J100	03-23		5000489	Screw	4
	J110	03-23		4460586	Cover plate	1
	J120	03-23		4800482	A pad seal	1
	J130	03-23		9007200-3712	Screw	4
	J140	03-23		1701186	Coupling, 11 tooth	1
	J150	03-23		4800754	Lifting bracket	1
	J155	03-23		9007315-0604	Screw	1
C3GV	B095	03-23	15-37	1700256	Check valve poppet	1
	B096	03-23	15-37	1700257	Check valve spring	1
	J010	03-23	15-37	1700596	Shaft, 15 tooth with auxiliary drive	1
	J020	03-23	15-37	11077608	End cap, CCW, radial ports, DL, gen. 1, JRL (SB-2010-002)	1
	J030	03-23	15-37	5000181 (9007314-1210)	Screw	4
	J050	03-23	15-37	9004700-1907	Pin	1
	J080	03-23	15-37	4570289	Flange adapter, A pad	1
	J090	03-23	15-37	5000099 (9004100-1550)	O-ring	1
	J095	03-23	15-37	545434 (9004100-0420)	O-ring	1
	J100	03-23	15-37	5000489	Screw	4
	J110	03-23	15-37	4460586	Cover plate	1
	J120	03-23	15-37	4800482	A pad seal	1
	J130	03-23	15-37	9007200-3712	Screw	4
	J140	03-23	15-37	1701186	Coupling, 11 tooth	1
	J150	03-23	15-37	4800754	Lifting bracket	1
	J155	03-23	15-37	9007315-0604	Screw	1
C3HE	B095	03-23		1700256	Check valve poppet	1
	B096	03-23		1700257	Check valve spring	1
	J010	03-23		1700596	Shaft, 15 tooth with auxiliary drive	1
	J020	03-23		11092368	End cap, CW, radial ports, gen. 2, JRR (SB-2010-002)	1
	J020	03-23		11086934	End cap, CCW, radial ports, gen. 2, JRL (SB-2010-002)	1
	J030	03-23		5000181 (9007314-1210)	Screw	4
	J050	03-23		9004700-1907	Pin	1
	J080	03-23		4570210	Flange adapter, B pad	1
	J090	03-23		5000099 (9004100-1550)	O-ring	1
	J095	03-23		545434 (9004100-0420)	O-ring	1
	J100	03-23		5000489	Screw	4
	J110	03-23		4460370	Cover plate	1
	J120	03-23		9004104-0440	O-ring	1
	J130	03-23		9007200-5021	Screw	2
	J140	03-23		1701188	Coupling, 15 tooth	1
	J150	03-23		4800754	Lifting bracket	1
	J155	03-23		9007315-0604	Screw	1

Shaft, auxiliary flange and end cap

(C3N1)

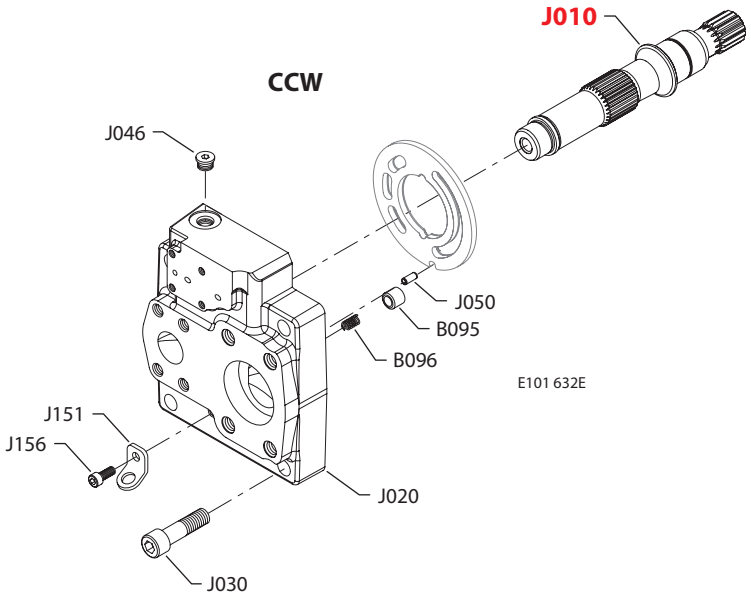

(C3N2)

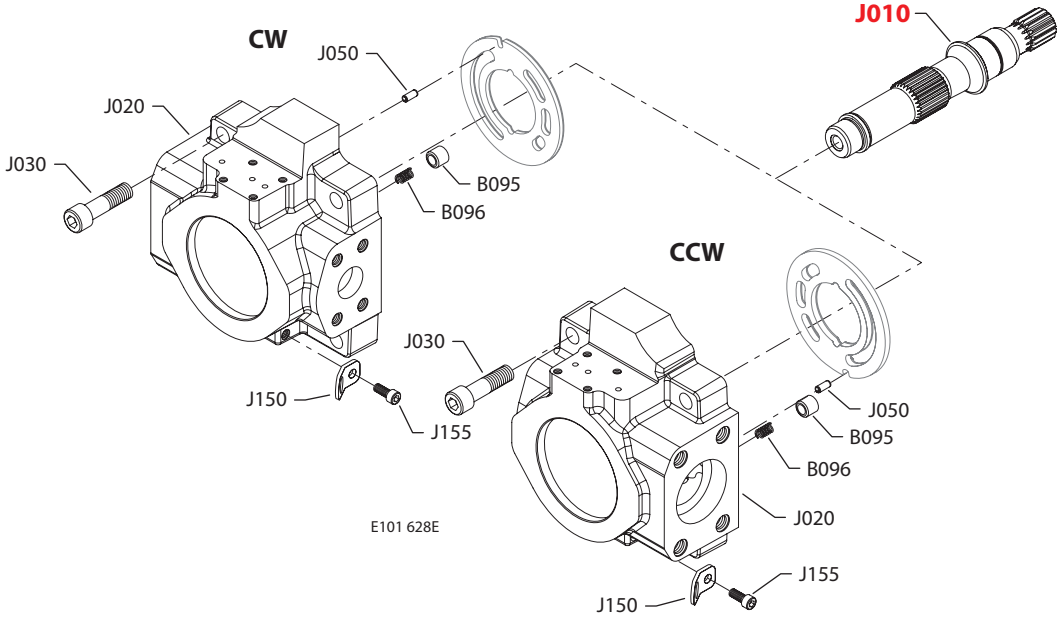

* = included in base motor seal kit Q210

Enlarged **bold** type item numbers are recommended part to stock for servicing.

Shaft, auxiliary flange and end cap

Shaft/auxiliary flange/end cap

Order code	Item	Date begin	Date end	Part number	Part name	Qty. per model/kit
C3N1	B095	10-07	15-38	1700256	Check valve poppet	1
	B096	10-07	15-38	1700257	Check valve spring	1
	J010	10-07	15-38	1700520	Shaft, 15 tooth	1
	J020	10-07	15-38	11077596	End cap, CCW, axial ports, gen. 1, JRL (SB-2010-002)	1
	J030	10-07	15-38	5000181 (9007314-1210)	Screw	4
	J046	10-07	15-38	9005110-5600	Plug assembly	1
	J050	10-07	15-38	9004700-1907	Pin	1
	J151	10-07	15-38	4800754	Lifting bracket	1
	J156	10-07	15-38	9007315-0604	Screw	1
C3N2	B095	03-23	15-39	1700256	Check valve poppet	1
	B096	03-23	15-39	1700257	Check valve spring	1
	J010	03-23	15-39	1700520	Shaft, 15 tooth	1
	J020	03-23	15-39	11068228	End cap, CW, radial ports, gen. 1, JRR (SB-2010-002)	1
	J020	03-23	15-39	11077605	End cap, CCW, radial ports, gen. 1, JRL (SB-2010-002)	1
	J030	03-23	15-39	5000181 (9007314-1210)	Screw	4
	J050	03-23	15-39	9004700-1907	Pin	1
	J150	03-23	15-39	4800754	Lifting bracket	1
	J155	03-23	15-39	9007315-0604	Screw	1

Shaft, auxiliary flange and end cap

(C3N3)

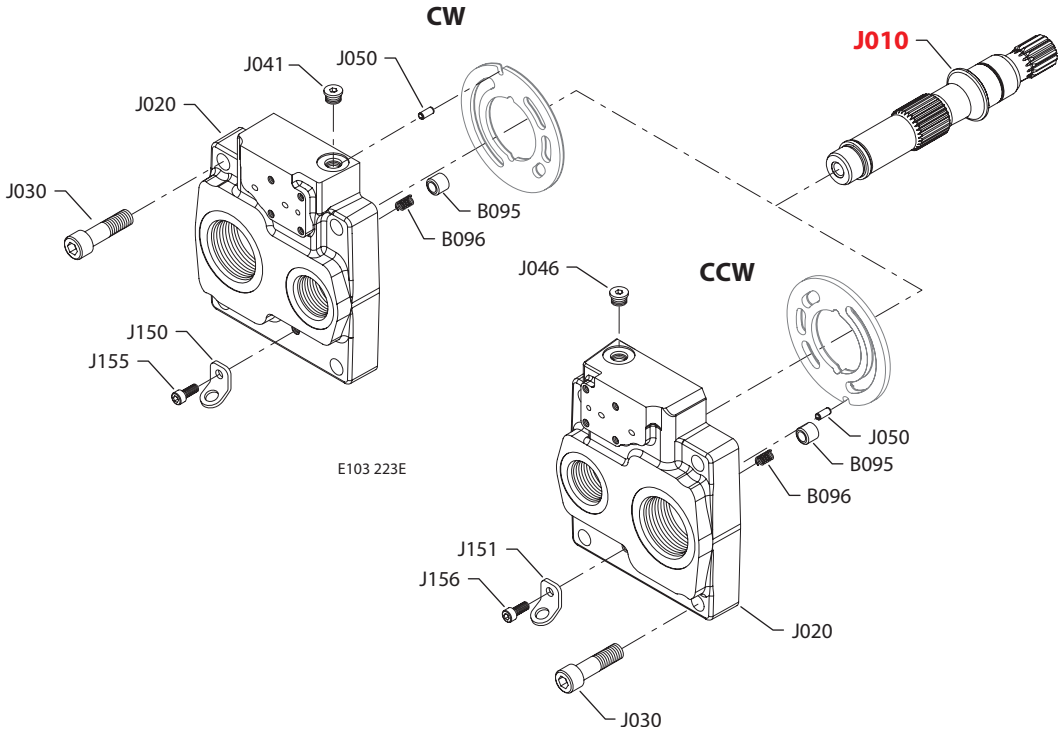

(C3N4)

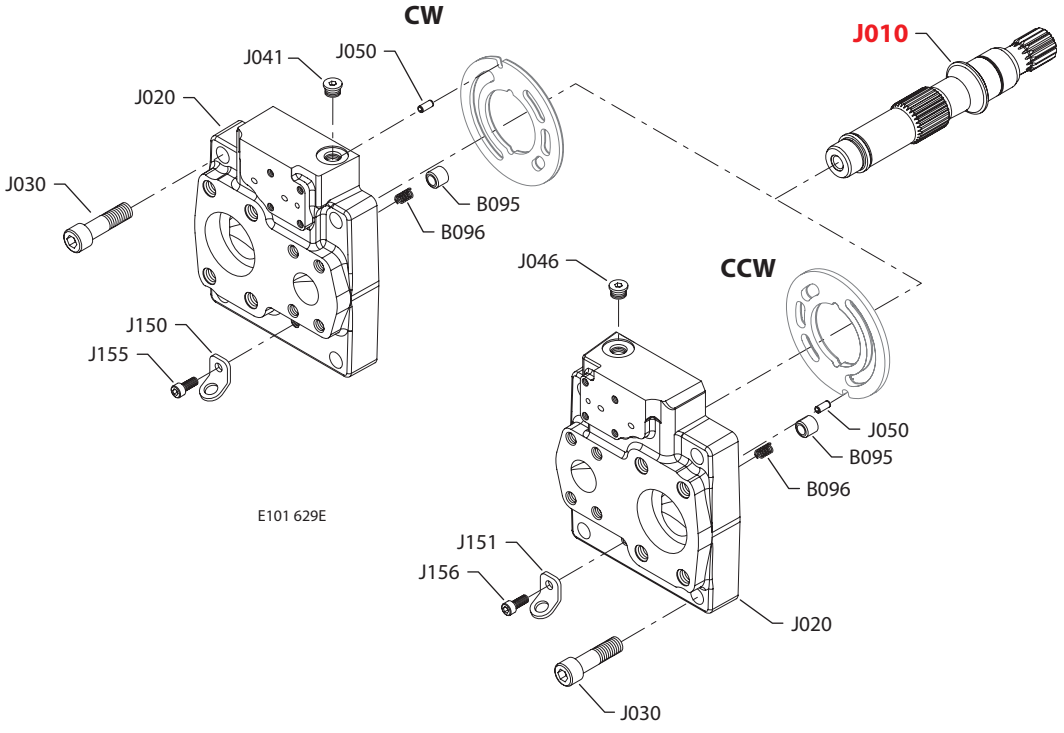

* = included in base motor seal kit Q210

Enlarged **bold** type item numbers are recommended part to stock for servicing.

Shaft, auxiliary flange and end cap

Shaft/auxiliary flange/end cap

Order code	Item	Date begin	Date end	Part number	Part name	Qty. per model/kit
C3N3	B095	03-23	15-36	1700256	Check valve poppet	1
	B096	03-23	15-36	1700257	Check valve spring	1
	J010	03-23	15-36	1700520	Shaft, 15 tooth without auxiliary drive	1
	J020	03-23	15-36	11077590	End cap,CW, axial ports, gen. 1, JRR (SB-2010-002)	1
	J020	03-23	15-36	11077594	End cap, CCW, axial ports, gen. 1, JRL (SB-2010-002)	1
	J030	03-23	15-36	9007314-1210	Screw	4
	J041	03-23	15-36	140644 (9005110-5600)	Plug assembly, JRR	1
	J046	03-23	15-36	140644 (9005110-5600)	Plug assembly, JRL	1
	J050	03-23	15-36	9004700-1907	Pin	1
	J150	03-23	15-36	4800754	Lifting bracket	1
	J151	03-23	15-36	4800754	Lifting bracket	1
	J155	03-23	15-36	9007315-0604	Screw	1
	J156	03-23	15-36	9007315-0604	Screw	1
C3N4	B095	03-23	15-38	1700256	Check valve poppet	1
	B096	03-23	15-38	1700257	Check valve spring	1
	J010	03-23	15-38	1700520	Shaft, 15 tooth without auxiliary drive	1
	J020	03-23	15-38	11077589	End cap,CW, axial ports, gen. 1, JRR (SB-2010-002)	1
	J020	03-23	15-38	11077593	End cap, CCW, axial ports, gen. 1, JRL (SB-2010-002)	1
	J030	03-23	15-38	9007314-1210	Screw	4
	J041	03-23	15-38	140644 (9005110-5600)	Plug assembly, JRR	1
	J046	03-23	15-38	140644 (9005110-5600)	Plug assembly, JRL	1
	J050	03-23	15-38	9004700-1907	Pin	1
	J150	03-23	15-38	4800754	Lifting bracket, JRR	1
	J151	03-23	15-38	4800754	Lifting bracket, JRL	1
	J155	03-23	15-38	9007315-0604	Screw, JRR	1
	J156	03-23	15-38	9007315-0604	Screw, JRL	1

Shaft, auxiliary flange and end cap

(C3N5)

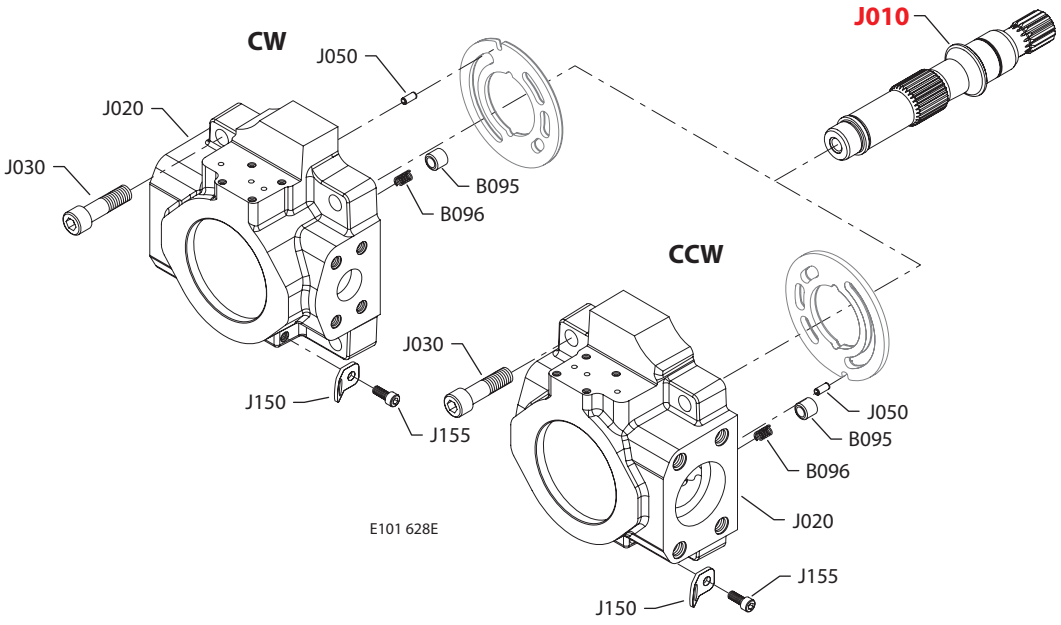

(C3N7)

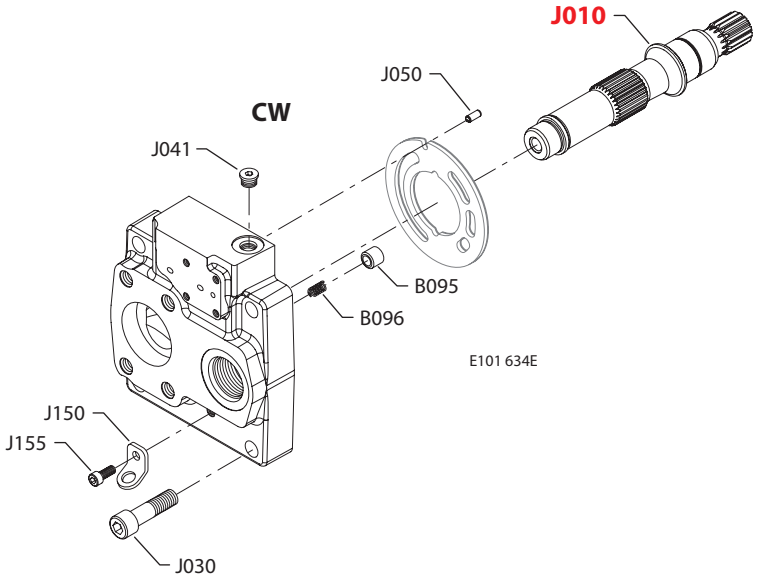

* = included in base motor seal kit Q210

Enlarged **bold** type item numbers are recommended part to stock for servicing.

Shaft, auxiliary flange and end cap

Shaft/auxiliary flange/end cap

Order code	Item	Date begin	Date end	Part number	Part name	Qty. per model/kit
C3N5	B095	03-23		1700256	Check valve poppet	1
	B096	03-23		1700257	Check valve spring	1
	J010	03-23		1700520	Shaft, 15 tooth	1
	J020	03-23	15-38	11077610	End cap, CW, radial ports, gen. 1, JRR (SB-2010-002)	1
	J020	03-23	15-38	11077609	End cap, CCW, radial ports, gen 1, JRL (SB-2010-002)	1
	J030	03-23		5000181 (9007314-1210)	Screw	4
	J050	03-23		9004700-1907	Pin	1
	J150	03-23		4800754	Lifting bracket	1
	J155	03-23		9007315-0604	Screw	1
C3N7	B095	03-23		1700256	Check valve poppet	1
	B096	03-23		1700257	Check valve spring	1
	J010	03-23		1700520	Shaft, 15 tooth without auxiliary drive	1
	J020	03-23		11086967	End cap, CW, axial ports, gen. 2, JRR (SB-2010-002)	1
	J030	03-23		9007314-1210	Screw	4
	J041	03-23		140644 (9005110-5600)	Plug assembly	1
	J050	03-23		9004700-1907	Pin	1
	J150	03-23		4800754	Lifting bracket	1
	J155	03-23		9007315-0604	Screw	1

Shaft, auxiliary flange and end cap

(C3N9)

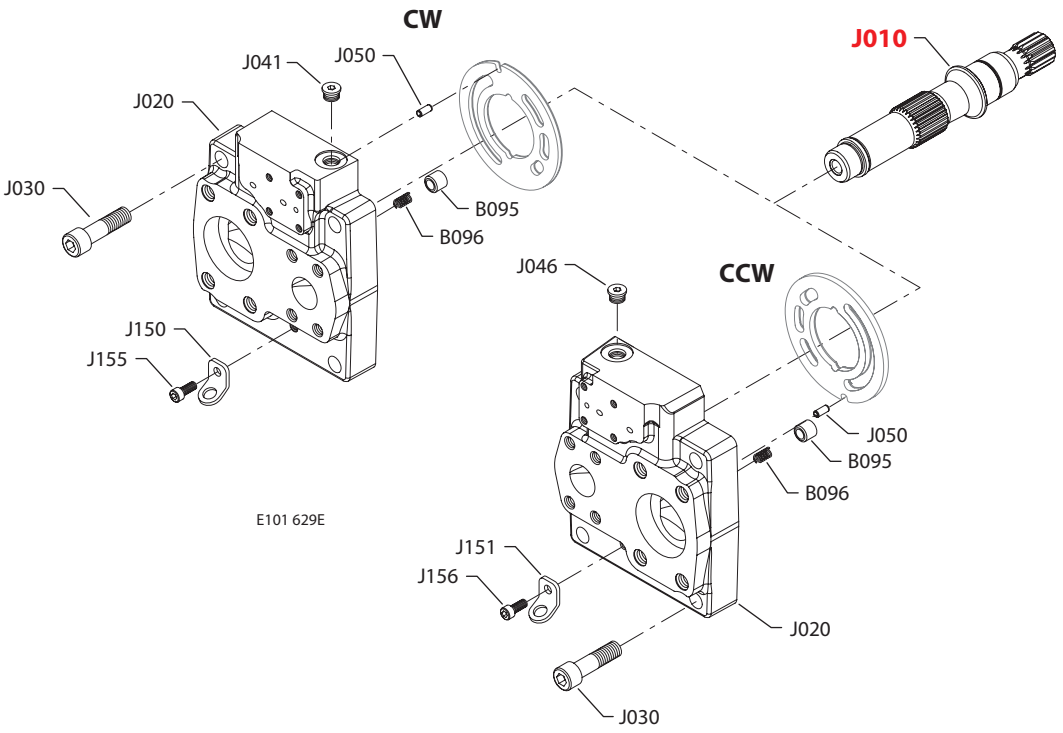

(C3NA & C3NC)

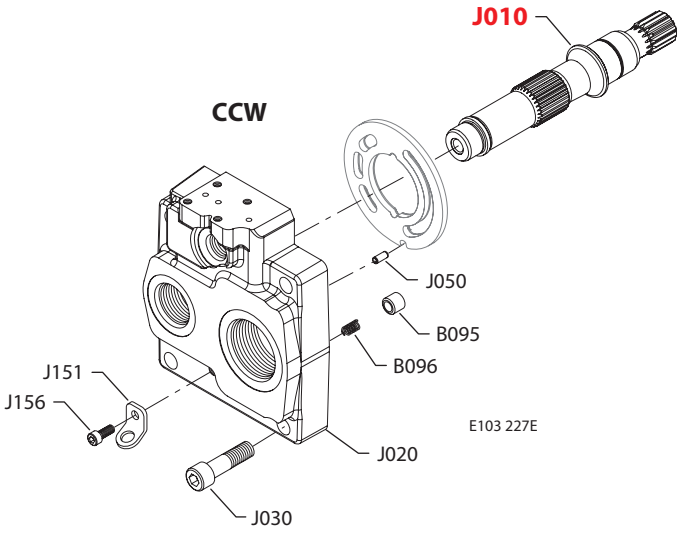

* = included in base motor seal kit Q210

Enlarged **bold** type item numbers are recommended part to stock for servicing.

Shaft, auxiliary flange and end cap

Shaft/auxiliary flange/end cap

Order code	Item	Date begin	Date end	Part number	Part name	Qty. per model/kit
C3N9	B095	12-06		1700256	Check valve poppet	1
	B096	12-06		1700257	Check valve spring	1
	J010	12-06		1700520	Shaft, 15 tooth without auxiliary drive	1
	J020	12-06		11095294	End cap, CW, axial ports, gen. 2, JRR	1
	J020	12-06		11095297	End cap, CCW, axial ports, gen. 2, JRL	1
	J030	12-06		5000181 (9007314-1210)	Screw	4
	J041	12-06		140644 (9005110-5600)	Plug assembly, JRR	1
	J046	12-06		140644 (9005110-5600)	Plug assembly, JRL	1
	J050	12-06		9004700-1907	Pin	1
	J150	12-06		4800754	Lifting bracket, JRR	1
	J151	12-06		4800754	Lifting bracket, JRL	1
	J155	12-06		9007315-0604	Screw, JRR	1
	J156	12-06		9007315-0604	Screw, JRL	1
C3NA	B095	12-06		1700256	Check valve poppet	1
	B096	12-06		1700257	Check valve spring	1
	J010	12-06		1700520	Shaft, 15 tooth without auxiliary drive	1
	J020	12-06		11106864	End cap, CCW, axial ports, DL, gen. 1, JRL	1
	J030	12-06		5000181 (9007314-1210)	Screw	4
	J050	12-06		9004700-1907	Pin	1
	J151	12-06		4800754	Lifting bracket	1
	J156	12-06		9007315-0604	Screw	1
C3NC	B095	03-23		1700256	Check valve poppet	1
	B096	03-23		1700257	Check valve spring	1
	J010	03-23		1700520	Shaft, 15 tooth without auxiliary drive	1
	J020	03-23		11077597	End cap, CCW, axial ports, DL, gen. 1 , JRL, (SB-2010-002)	1
	J030	03-23		5000181 (9007314-1210)	Screw	4
	J050	03-23		9004700-1907	Pin	1
	J151	03-23		4800754	Lifting bracket	1
	J156	03-23		9007315-0604	Screw	1

Shaft, auxiliary flange and end cap

(C3NE)

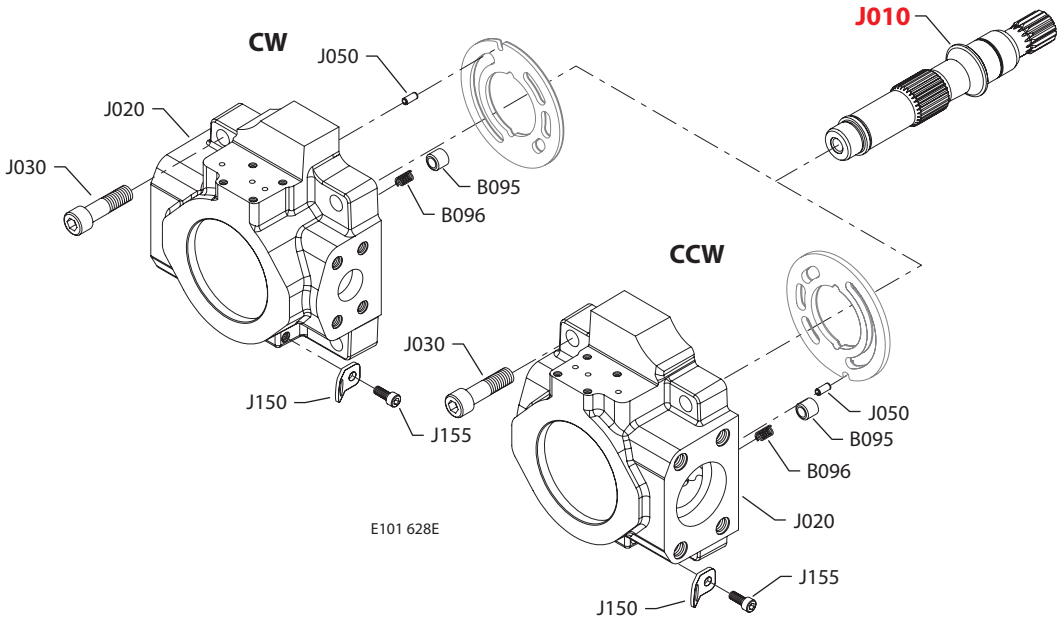

(C3NH)

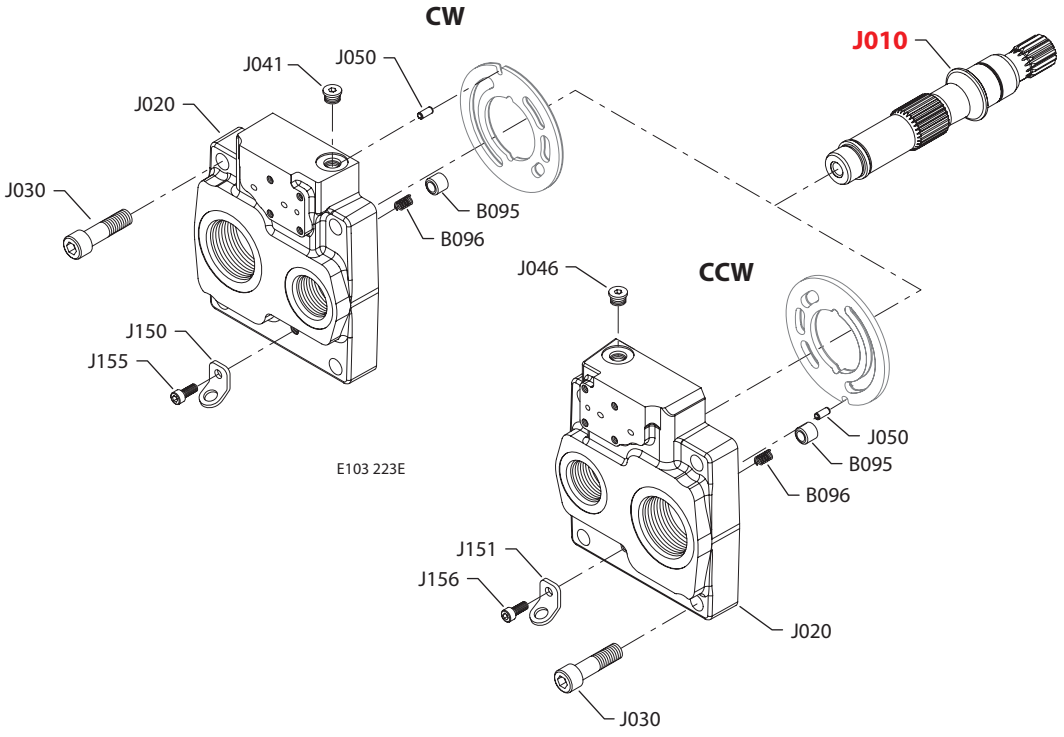

* = included in base motor seal kit Q210

Enlarged **bold** type item numbers are recommended part to stock for servicing.

Shaft, auxiliary flange and end cap

Shaft/auxiliary flange/end cap

Order code	Item	Date begin	Date end	Part number	Part name	Qty. per model/kit
C3NE	B095	11-39		1700256	Check valve poppet	1
	B096	11-39		1700257	Check valve spring	1
	J010	11-39		1700520	Shaft, 15 tooth without auxiliary drive	1
	J020	11-39		11095323	End cap, CW, radial ports, gen. 2, JRR	1
	J020	11-39		11082641	End cap, CCW, radial ports, gen. 2, JRL	1
	J030	11-39		5000181 (9007314-1210)	Screw	4
	J050	11-39		9004700-1907	Pin	1
	J150	11-39		4800754	Lifting bracket	1
	J155	11-39		9007315-0604	Screw	1
C3NH	B095	11-39		1700256	Check valve poppet	1
	B096	11-39		1700257	Check valve spring	1
	J010	11-39		1700520	Shaft, 15 tooth without auxiliary drive	1
	J020	11-39		11095295	End cap, CW, axial ports, gen. 2, JRR	1
	J020	11-39		11095298	End cap, CCW, axial ports, gen. 2, JRL	1
	J030	11-39		5000181 (9007314-1210)	Screw	4
	J041	11-39		327007 (9005110-5600)	Plug assembly, JRR	1
	J046	11-39		327007 (9005110-5600)	Plug assembly, JRL	1
	J050	11-39		9004700-1907	Pin	1
	J150	11-39		4800754	Lifting bracket, JRR	1
	J151	11-39		4800754	Lifting bracket, JRL	1
	J155	11-39		9007315-0604	Screw, JRR	1
	J156	11-39		9007315-0604	Screw, JRL	1

Shaft, auxiliary flange and end cap

(C3NI)

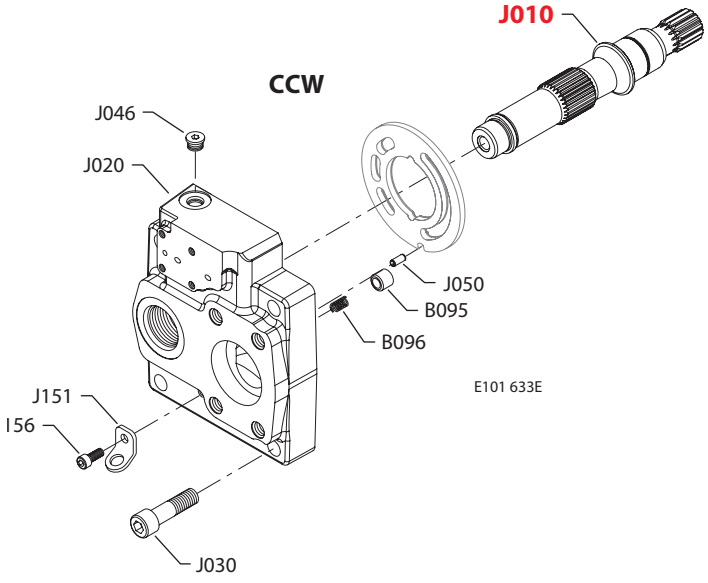

(C3NV)

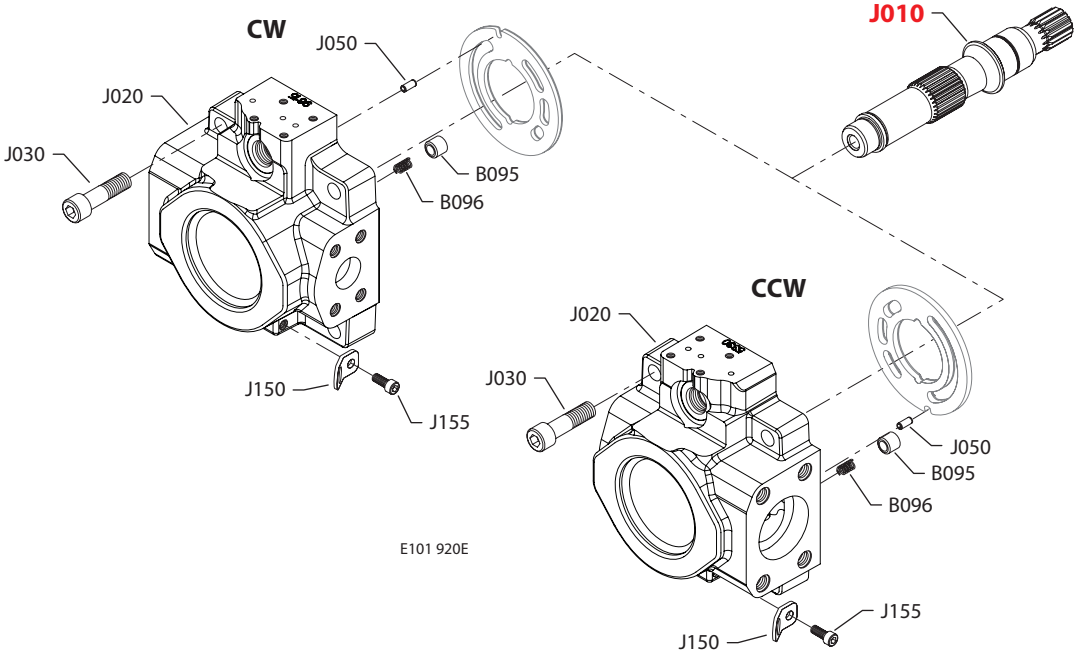

* = included in base motor seal kit Q210

Enlarged **bold** type item numbers are recommended part to stock for servicing.

Shaft, auxiliary flange and end cap

Shaft/auxiliary flange/end cap

Order code	Item	Date begin	Date end	Part number	Part name	Qty. per model/kit
C3NI	B095	11-39		1700256	Check valve poppet	1
	B096	11-39		1700257	Check valve spring	1
	J010	11-39		1700520	Shaft, 15 tooth without auxiliary drive	1
	J020	11-39		11095301	End cap, CCW, axial ports, gen.2, JRL	1
	J030	11-39		5000181 (9007314-1210)	Screw	4
	J046	11-39		140644 (9005110-5600)	Plug assembly	1
	J050	11-39		9004700-1907	Pin	1
	J151	11-39		4800754	Lifting bracket	1
	J156	11-39		9007315-0604	Screw	1
C3NV	B095	11-39		1700256	Check valve poppet	1
	B096	11-39		1700257	Check valve spring	1
	J010	11-39		1700520	Shaft, 15 tooth without auxiliary drive	1
	J020	11-39		11099615	End cap, CW, radial ports, DL, gen. 2, JRR	1
	J020	11-39		11095330	End cap, CCW, radial ports, DL, gen. 2, JRL	1
	J030	11-39		5000181 (9007314-1210)	Screw	4
	J050	11-39		9004700-1907	Pin	1
	J150	11-39		4800754	Lifting bracket	1
	J155	11-39		9007315-0604	Screw	1

Shaft, auxiliary flange and end cap

(C3NW)

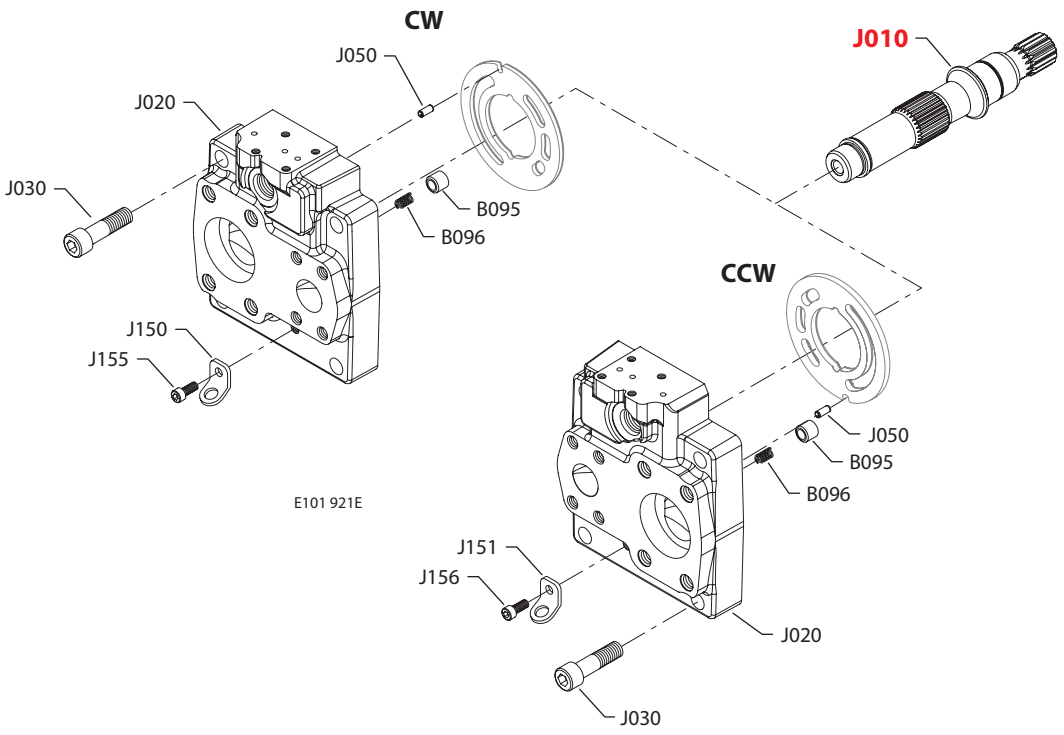

(C3NX)

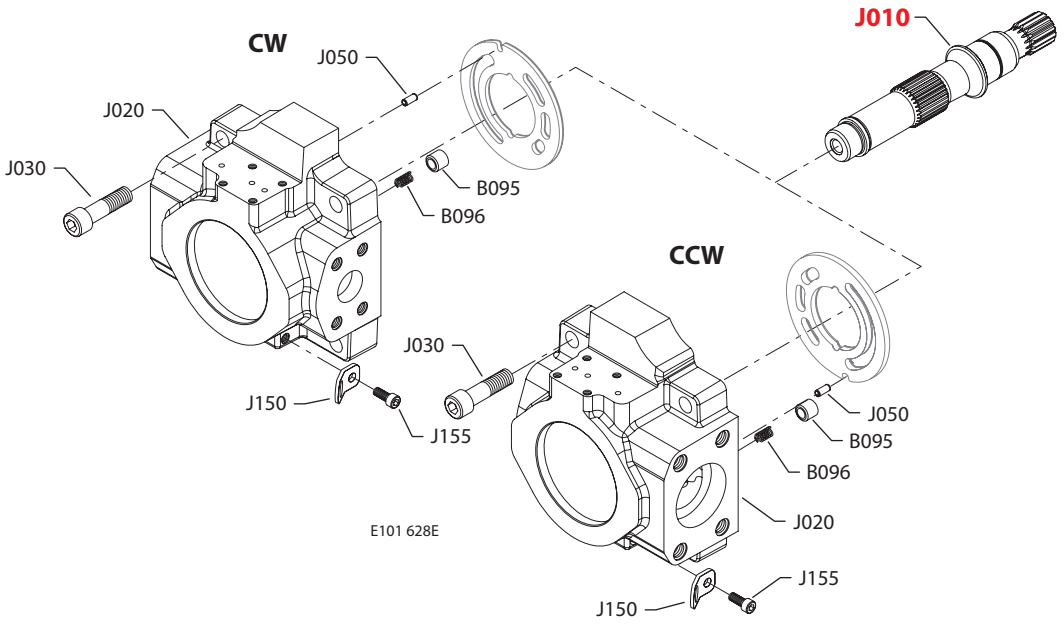

* = included in base motor seal kit Q210

Enlarged **bold** type item numbers are recommended part to stock for servicing.

Shaft, auxiliary flange and end cap

Shaft/auxiliary flange/end cap

Order code	Item	Date begin	Date end	Part number	Part name	Qty. per model/kit
C3NW	B095	11-39	15-36	1700256	Check valve poppet	1
	B096	11-39	15-36	1700257	Check valve spring	1
	J010	11-39	15-36	1700520	Shaft, 15 tooth without auxiliary drive	1
	J020	11-39	15-36	11077591	End cap, CW, axial ports, DL, gen. 1, JRR (SB-2010-002)	1
	J020	11-39	15-36	11077595	End cap, CCW, axial ports, DL, gen. 1, JRL (SB-2010-002)	1
	J030	11-39	15-36	5000181 (9007314-1210)	Screw	4
	J050	11-39	15-36	9004700-1907	Pin	1
	J150	11-39	15-36	4800754	Lifting bracket, JRR	1
	J151	11-39	15-36	4800754	Lifting bracket, JRL	1
	J155	11-39	15-36	9007315-0604	Screw, JRR	1
	J156	11-39	15-36	9007315-0604	Screw, JRL	1
C3NX	B095	11-47		1700256	Check valve poppet	1
	B096	11-47		1700257	Check valve spring	1
	J010	11-47		1700520	Shaft, 15 tooth without auxiliary drive	1
	J020	11-47		11106865	End cap, CW, radial ports, gen. 2, JRL	1
	J020	11-47		11095331	End cap, CCW, radial ports, gen. 2, JRL	1
	J030	11-47		5000181 (9007314-1210)	Screw	4
	J050	11-47		9004700-1907	Pin	1
	J150	11-47		4800754	Lifting bracket	1
	J155	11-47		9007315-0604	Screw	1

Shaft, auxiliary flange and end cap

(C3NY)

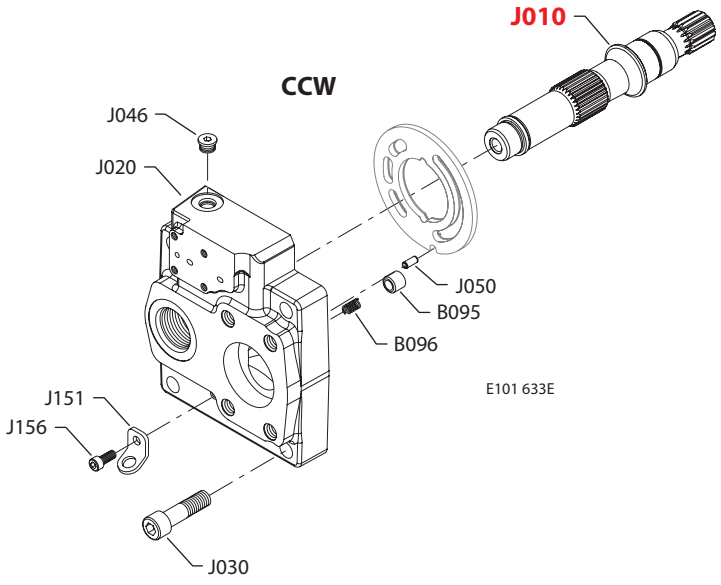

(C3NZ)

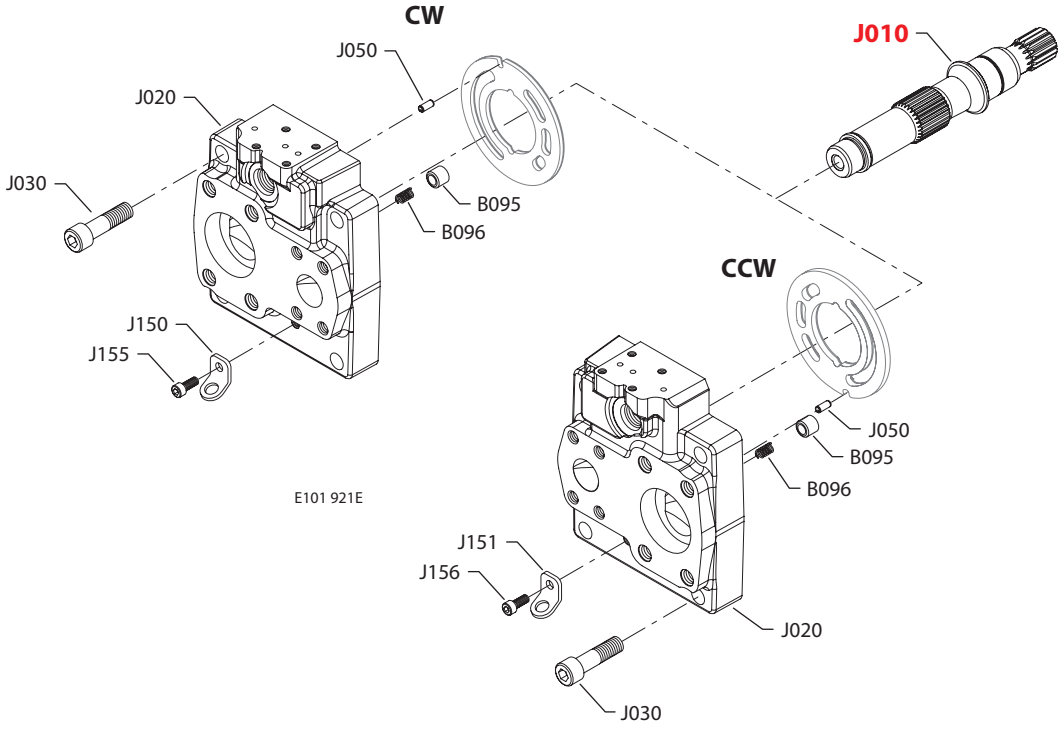

* = included in base motor seal kit Q210

Enlarged **bold** type item numbers are recommended part to stock for servicing.

Shaft, auxiliary flange and end cap

Shaft/auxiliary flange/end cap

Order code	Item	Date begin	Date end	Part number	Part name	Qty. per model/kit
C3NY	B095	10-44	15-38	1700256	Check valve poppet	1
	B096	10-44	15-38	1700257	Check valve spring	1
	J010	10-44	15-38	1700520	Shaft, 15 tooth without auxiliary drive	1
	J020	10-44	15-38	11088260	End cap, CCW, axial ports, gen. 1, JRL	1
	J030	10-44	15-38	5000181 (9007314-1210)	Screw	4
	J046	10-44	15-38	140644 (9005110-5600)	Plug assembly	1
	J050	10-44	15-38	9004700-1907	Pin	1
	J151	10-44	15-38	4800754	Lifting bracket	1
	J156	10-44	15-38	9007315-0604	Screw	1
C3NZ	B095	11-43		1700256	Check valve poppet	1
	B096	11-43		1700257	Check valve spring	1
	J010	11-43		1700520	Shaft, 15 tooth without auxiliary drive	1
	J020	11-43		11095296	End cap, CW, axial ports, DL, gen. 2, JRR	1
	J020	11-43		11095299	End cap, CCW, axial ports, DL, gen. 2, JRL	1
	J030	11-43		5000181 (9007314-1210)	Screw	4
	J050	11-43		9004700-1907	Pin	1
	J150	11-43		4800754	Lifting bracket, JRR	1
	J151	11-43		4800754	Lifting bracket, JRL	1
	J155	11-43		9007315-0604	Screw, JRR	1
	J156	11-43		9007315-0604	Screw, JRL	1

Shaft, auxiliary flange and end cap

(C3R2 & C3RE)

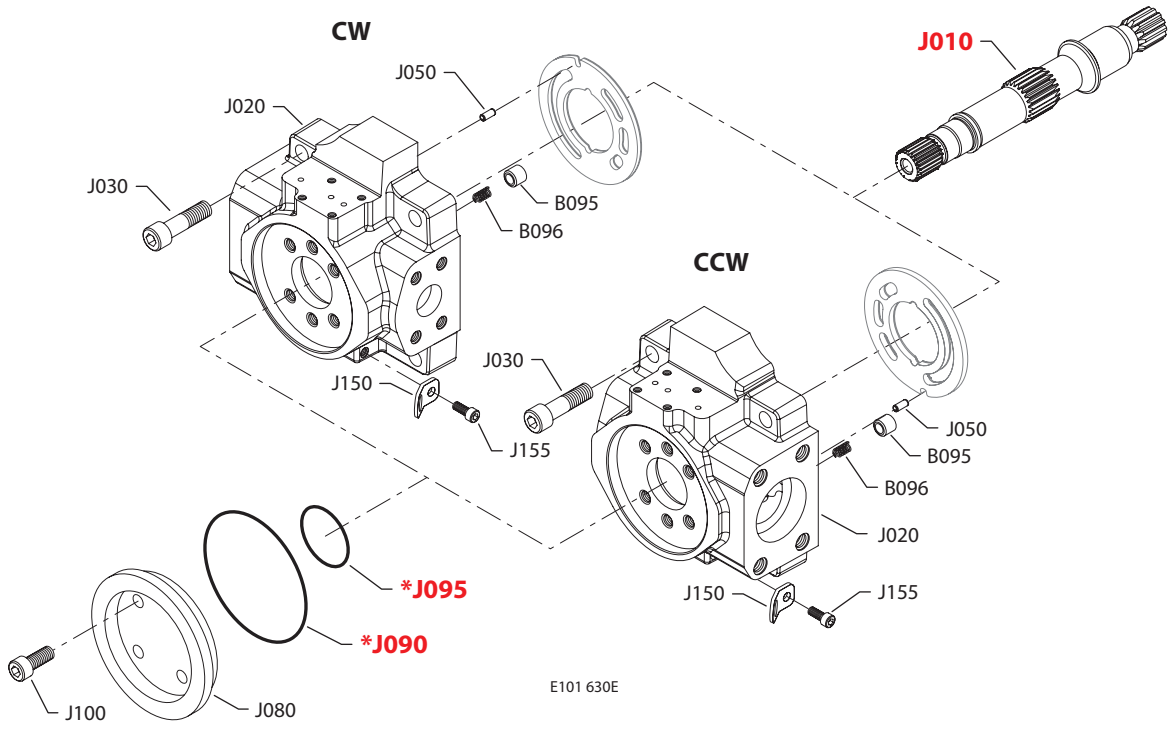

E101 630E

(C3RF)

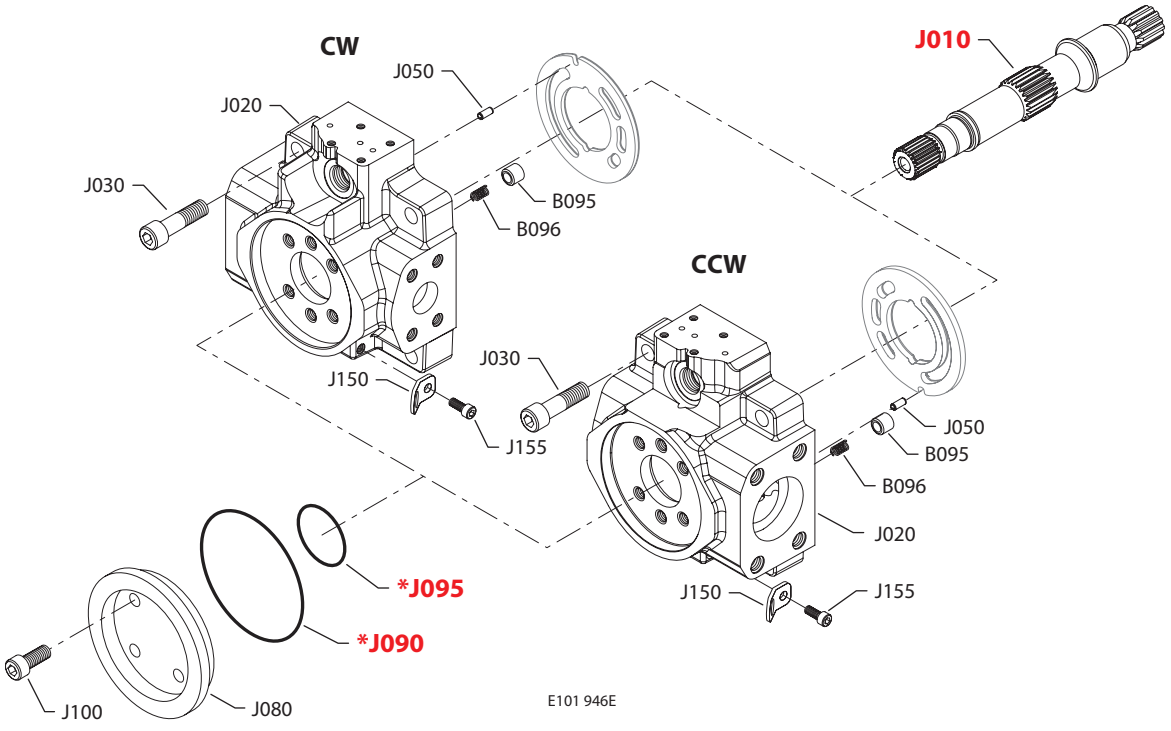

E101 946E

* = included in base motor seal kit Q210

Enlarged **bold** type item numbers are recommended part to stock for servicing.

Shaft, auxiliary flange and end cap

Shaft/auxiliary flange/end cap

Order code	Item	Date begin	Date end	Part number	Part name	Qty. per model/kit
C3R2	B095	03-23	15-39	1700256	Check valve poppet	1
	B096	03-23	15-39	1700257	Check valve spring	1
	J010	03-23	15-39	1700596	Shaft, 15 tooth with auxiliary drive	1
	J020	03-23	15-39	11077600	End cap, CW, radial ports, gen. 1, JRR (SB-2010-002)	1
	J020	03-23	15-39	11077606	End cap, CCW, radial ports, gen. 1, JRL (SB-2010-002)	1
	J030	03-23	15-39	5000181 (9007314-1210)	Screw	4
	J050	03-23	15-39	9004700-1907	Pin	1
	J080	03-23	15-39	4570179	Running cover	1
	J090	03-23	15-39	5000099 (9004100-1550)	O-ring	1
	J095	03-23	15-39	545434 (9004104-0310)	O-ring	1
	J100	03-23	15-39	5000489	Screw	4
	J150	03-23	15-39	4800754	Lifting bracket	1
	J155	03-23	15-39	9007315-0604	Screw	1
C3RE	B095	11-41		1700256	Check valve poppet	1
	B096	11-41		1700257	Check valve spring	1
	J010	11-41		1700596	Shaft, 15 tooth with auxiliary drive	1
	J020	11-41		11092368	End cap, CW, radial ports, gen. 2, JRR	1
	J020	11-41		11086934	End cap, CCW, radial ports, gen. 2, JRRL	1
	J030	11-41		5000181 (9007314-1210)	Screw	4
	J050	11-41		9004700-1907	Pin	1
	J080	11-41		4570179	Running cover	1
	J090	11-41		5000099 (9004100-1550)	O-ring	1
	J095	11-41		545434 (9004104-0310)	O-ring	1
	J100	11-41		5000489	Screw	4
	J150	11-41		4800754	Lifting bracket	1
	J155	11-41		9007315-0604	Screw	1
C3RF	B095	11-47		1700256	Check valve poppet	1
	B096	11-47		1700257	Check valve spring	1
	J010	11-47		1700596	Shaft, 15 tooth with auxiliary drive	1
	J020	11-47		11095327	End cap, CW, radial ports, DL, gen. 2, JRR	1
	J020	11-47		11086919	End cap, CCW, radial ports, DL, gen. 2, JRL	1
	J030	11-47		5000181 (9007314-1210)	Screw	4
	J050	11-47		9004700-1907	Pin	1
	J080	11-47		4570179	Running cover	1
	J090	11-47		5000099 (9004100-1550)	O-ring	1
	J095	11-47		545434 (9004104-0310)	O-ring	1
	J100	11-47		5000489	Screw	4
	J150	11-47		4800754	Lifting bracket	1
	J155	11-47		9007315-0604	Screw	1

Shaft, auxiliary flange and end cap

(C3RV)

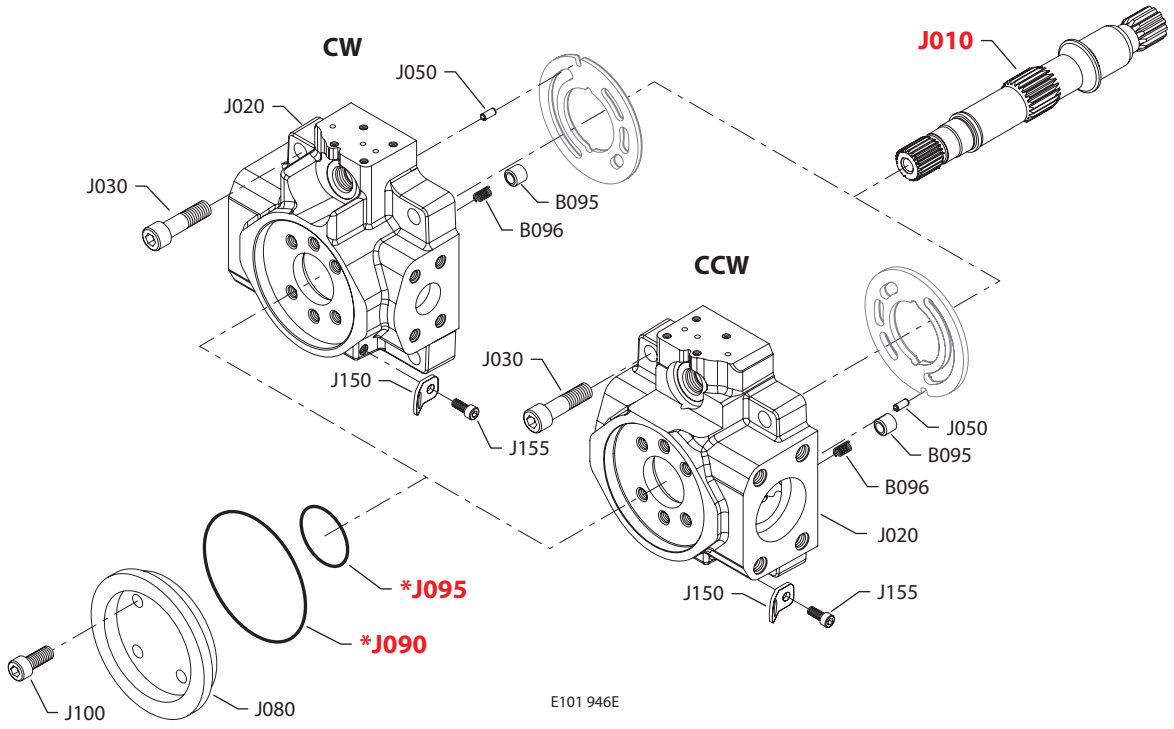

(C3T2 & C3TE)

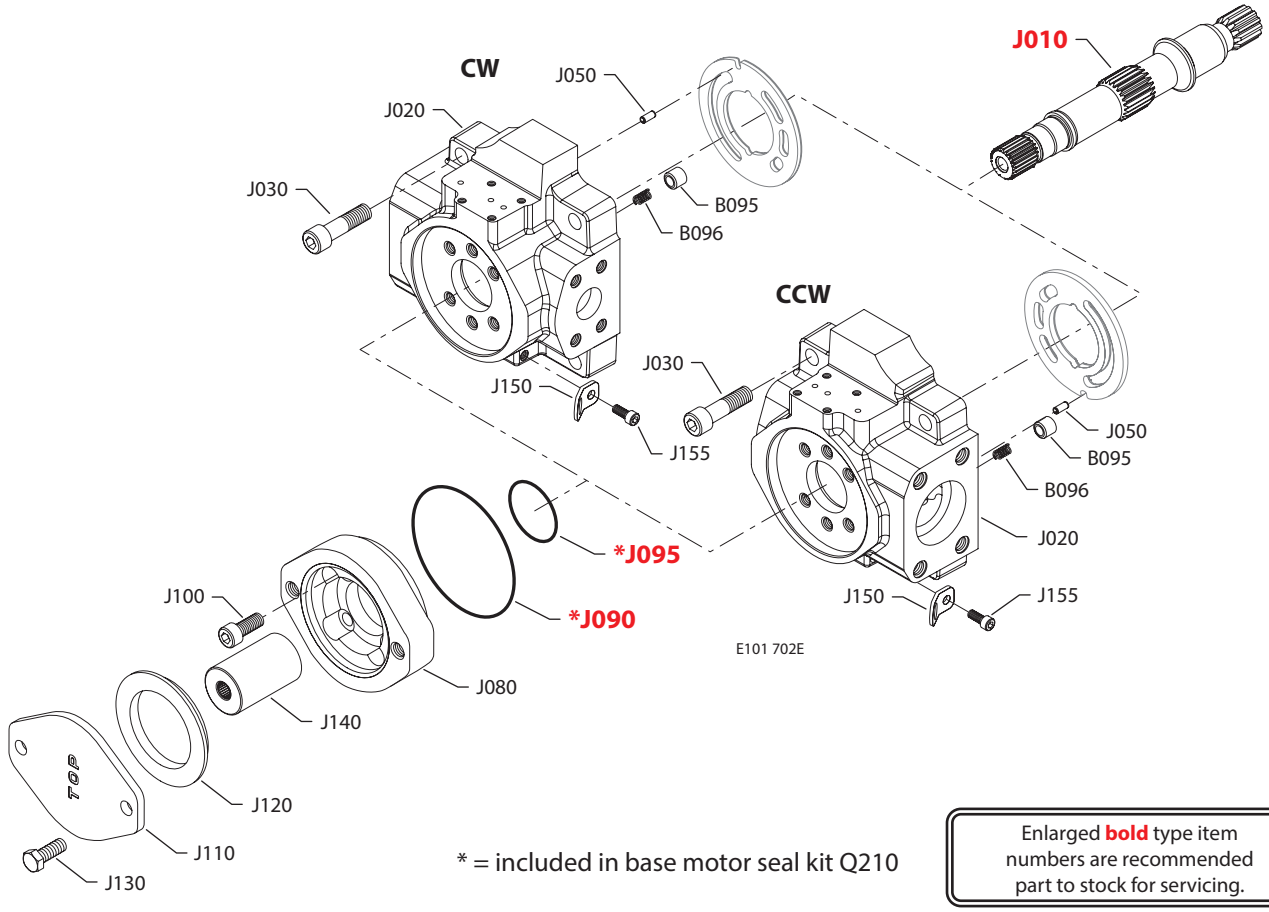

* = included in base motor seal kit Q210

Enlarged **bold** type item numbers are recommended part to stock for servicing.

Shaft, auxiliary flange and end cap

Shaft/auxiliary flange/end cap

Order code	Item	Date begin	Date end	Part number	Part name	Qty. per model/kit
C3RV	B095	03-23	15-37	1700256	Check valve poppet	1
	B096	03-23	15-37	1700257	Check valve spring	1
	J010	03-23	15-37	1700596	Shaft, 15 tooth with auxiliary drive	1
	J020	03-23	15-37	11077604	End cap, CW, radial ports, DL, gen. 1, JRR (SB-2010-002)	1
	J020	03-23	15-37	11077608	End cap, CCW, radial ports, DL, gen. 1, JRL (SB-2010-002)	1
	J030	03-23	15-37	5000181 (9007314-1210)	Screw	4
	J050	03-23	15-37	9004700-1907	Pin	1
	J080	03-23	15-37	4570179	Running cover	1
	J090	03-23	15-37	5000099 (9004100-1550)	O-ring	1
	J095	03-23	15-37	545434 (9004104-0310)	O-ring	1
	J100	03-23	15-37	5000489	Screw	4
	J150	03-23	15-37	4800754	Lifting bracket	1
	J155	03-23	15-37	9007315-0604	Screw	1
C3T2	B095	03-23	15-39	1700256	Check valve poppet	1
	B096	03-23	15-39	1700257	Check valve spring	1
	J010	03-23	15-39	1700596	Shaft, 15 tooth with auxiliary drive	1
	J020	03-23	15-39	11077606	End cap, CCW, radial ports, gen. 1, JRL (SB-2010-002)	1
	J030	03-23	15-39	5000181 (9007314-1210)	Screw	4
	J050	03-23	15-39	9004700-1907	Pin	1
	J080	03-23	15-39	4570289	Flange adapter, A pad	1
	J090	03-23	15-39	5000099 (9004100-1550)	O-ring	1
	J095	03-23	15-39	545434 (9004100-0420)	O-ring	1
	J100	03-23	15-39	5000489	Screw	4
	J110	03-23	15-39	4460586	Cover plate	1
	J120	03-23	15-39	4800482	A pad seal	1
	J130	03-23	15-39	9007200-3712	Screw	2
	J140	03-23	15-39	1701186	Coupling, 11 tooth	1
	J150	03-23	15-39	4800754	Lifting bracket	1
	J155	03-23	15-39	9007315-0604	Screw	1
C3TE	B095	03-23		1700256	Check valve poppet	1
	B096	03-23		1700257	Check valve spring	1
	J010	03-23		1700596	Shaft, 15 tooth with auxiliary drive	1
	J020	03-23		11092368	End cap, CW, radial ports, gen. 2, JRR (SB-2010-002)	1
	J020	03-23		11086934	End cap, CCW, radial ports, gen. 2, JRL (SB-2010-002)	1
	J030	03-23		5000181 (9007314-1210)	Screw	4
	J050	03-23		9004700-1907	Pin	1
	J080	03-23		4570289	Flange adapter, A pad	1
	J090	03-23		5000099 (9004100-1550)	O-ring	1
	J095	03-23		545434 (9004100-0420)	O-ring	1
	J100	03-23		5000489	Screw	4
	J110	03-23		4460586	Cover plate	1
	J120	03-23		4800482	A pad seal	1
	J130	03-23		9007200-3712	Screw	2
	J140	03-23		1701186	Coupling, 11 tooth	1
	J150	03-23		4800754	Lifting bracket	1
	J155	03-23		9007315-0604	Screw	1

Shaft, auxiliary flange and end cap

(C3TF)

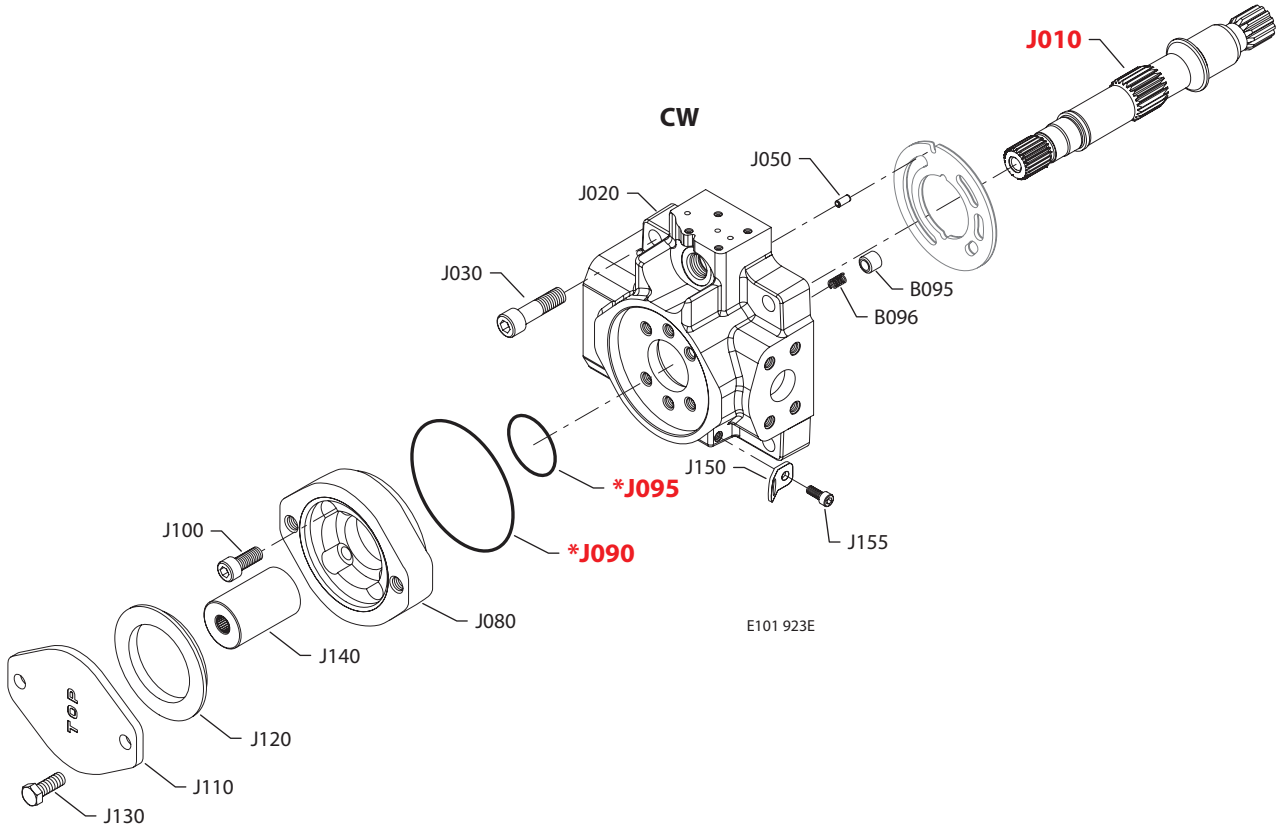

(C3TM)

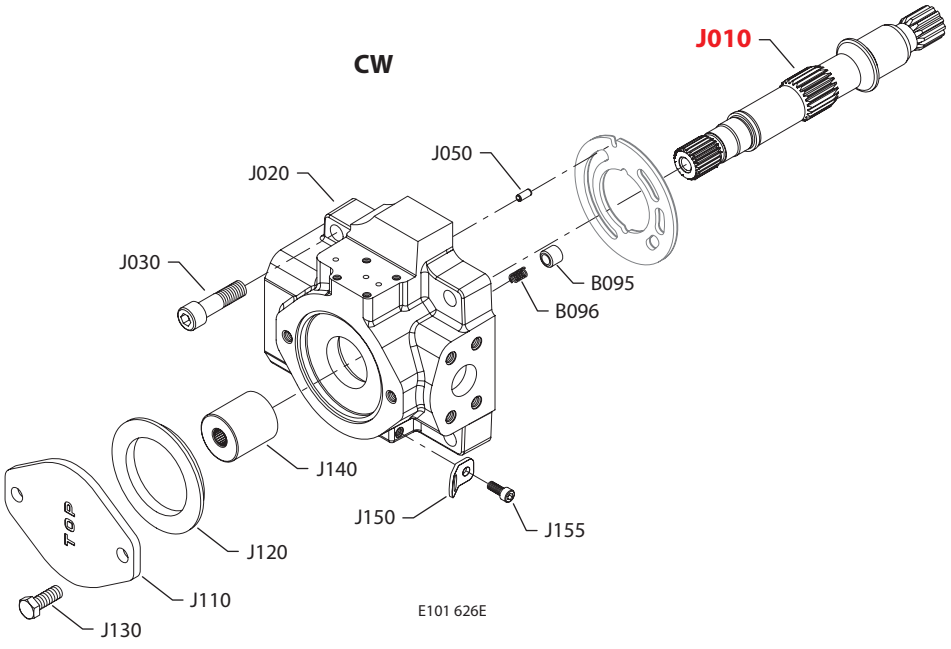

* = included in base motor seal kit Q210

Enlarged **bold** type item numbers are recommended part to stock for servicing.

Shaft, auxiliary flange and end cap

Shaft/auxiliary flange/end cap

Order code	Item	Date begin	Date end	Part number	Part name	Qty. per model/kit
C3TF	B095	16-22		1700256	Check valve poppet	1
	B096	16-22		1700257	Check valve spring	1
	J010	16-22		1700596	Shaft, 15 tooth with auxiliary drive	1
	J020	16-22		11095327	End cap, CW, radial ports, DL, gen. 2, JRR	1
	J030	16-22		5000181 (9007314-1210)	Screw	4
	J050	16-22		9004700-1907	Pin	1
	J080	16-22		4570289	Flange adapter, A pad	1
	J090	16-22		5000099 (9004100-1550)	O-ring	1
	J095	16-22		545434 (9004100-0420)	O-ring	1
	J100	16-22		5000489	Screw	4
	J110	16-22		4460586	Cover plate	1
	J120	16-22		4800482	A pad seal	1
	J130	16-22		9007200-3712	Screw	2
	J140	16-22		1701186	Coupling, 11 tooth	1
	J150	16-22		4800754	Lifting bracket	1
	J155	16-22		9007315-0604	Screw	1
C3TM	B095	03-23	15-37	1700256	Check valve poppet	1
	B096	03-23	15-37	1700257	Check valve spring	1
	J010	03-23	15-37	1700596	Shaft, 15 tooth with auxiliary drive	1
	J020	03-23	15-37	11077602	End cap, CW, radial ports, gen. 1, JRR (SB-2010-002)	1
	J030	03-23	15-37	5000181 (9007314-1210)	Screw	4
	J050	03-23	15-37	9004700-1907	Pin	1
	J110	03-23	15-37	4460586	Cover plate	1
	J120	03-23	15-37	4800482	A pad seal	1
	J130	03-23	15-37	5000622	Screw	2
	J140	03-23	15-37	1700731	Coupling, 11 tooth	1
	J150	03-23	15-37	4800754	Lifting bracket	1
	J155	03-23	15-37	9007315-0604	Screw	1

Shaft, auxiliary flange and end cap

(C3TS & C3TT)

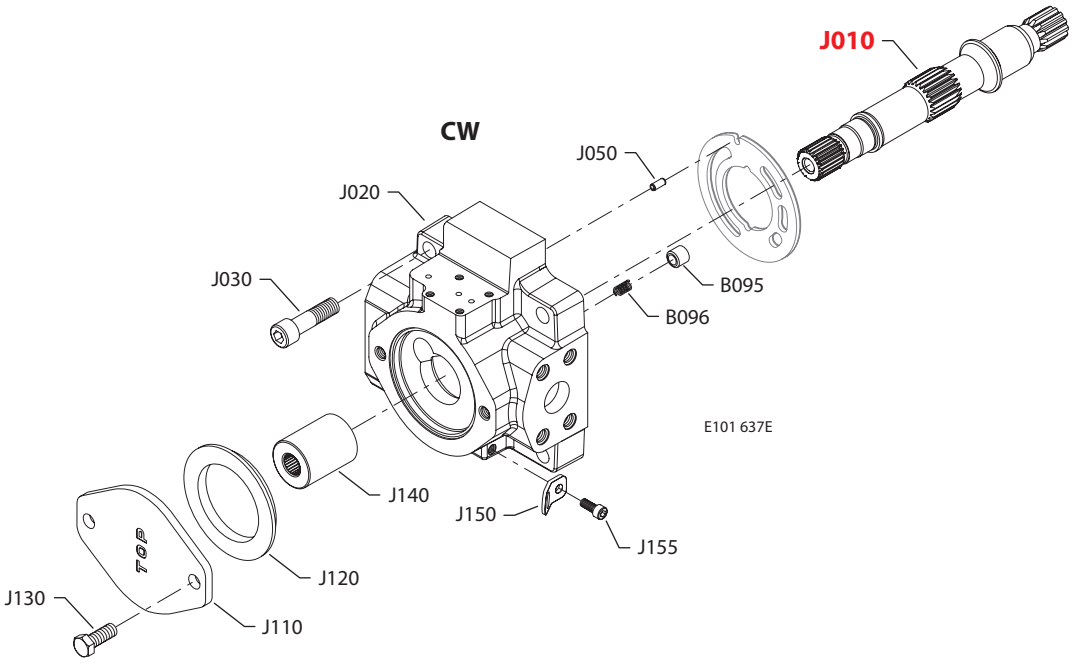

(C3TZ)

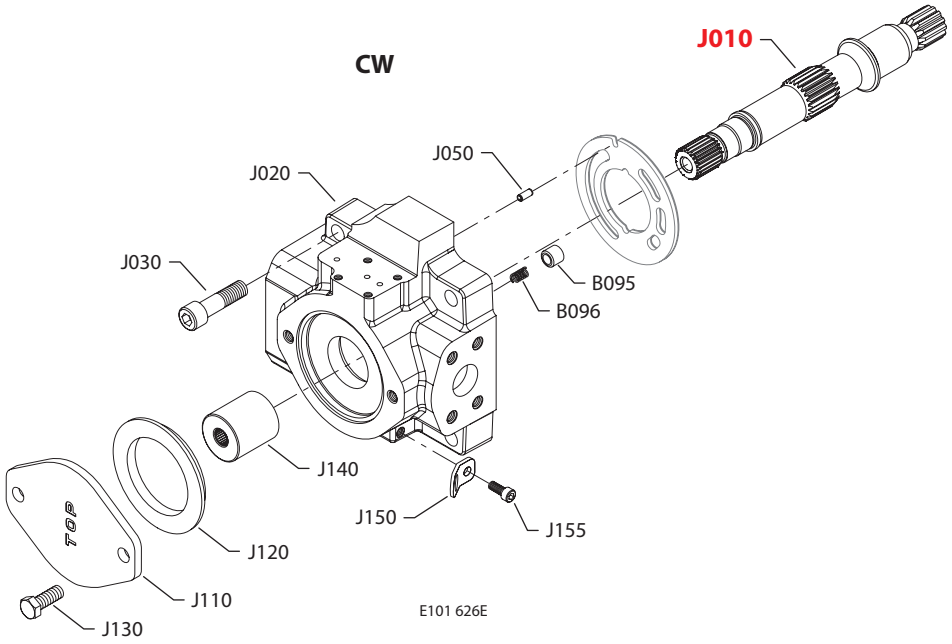

* = included in base motor seal kit Q210

Enlarged **bold** type item numbers are recommended part to stock for servicing.

Shaft, auxiliary flange and end cap

Shaft/auxiliary flange/end cap

Order code	Item	Date begin	Date end	Part number	Part name	Qty. per model/kit
C3TS	B095	14-24		1700256	Check valve poppet	1
	B096	14-24		1700257	Check valve spring	1
	J010	14-24		1700596	Shaft, 15 tooth with auxiliary drive	1
	J020	14-24		11151097	End cap, CW, radial ports, gen. 2, JRR	1
	J030	14-24		5000181 (9007314-1210)	Screw	4
	J050	14-24		9004700-1907	Pin	1
	J110	14-24		4460586	Cover plate	1
	J120	14-24		4800482	A pad seal	1
	J130	14-24		5000622	Screw	2
	J140	14-24		1700731	Coupling, 11 tooth	1
	J150	14-24		4800754	Lifting bracket	1
	J155	14-24		9007315-0604	Screw	1
C3TT	B095	03-23	15-41	1700256	Check valve poppet	1
	B096	03-23	15-41	1700257	Check valve spring	1
	J010	03-23	15-41	1700596	Shaft, 15 tooth with auxiliary drive	1
	J020	03-23	15-41	11077603	End cap, CW, radial ports, gen. 1, JRR (SB-2010-002)	1
	J030	03-23	15-41	5000181 (9007314-1210)	Screw	4
	J050	03-23	15-41	9004700-1907	Pin	1
	J110	03-23	15-41	4460586	Cover plate	1
	J120	03-23	15-41	4800482	A pad seal	1
	J130	03-23	15-41	5000622	Screw	2
	J140	03-23	15-41	1700731	Coupling, 11 tooth	1
	J150	03-23	15-41	4800754	Lifting bracket	1
	J155	03-23	15-41	9007315-0604	Screw	1
C3TZ	B095	03-23		1700256	Check valve poppet	1
	B096	03-23		1700257	Check valve spring	1
	J010	03-23		1700596	Shaft, 15 tooth with auxiliary drive	1
	J020	03-23		11095328	End cap, CW, radial ports, gen. 2, JRR	1
	J030	03-23		5000181 (9007314-1210)	Screw	4
	J050	03-23		9004700-1907	Pin	1
	J110	03-23		4460586	Cover plate	1
	J120	03-23		4800482	A pad seal	1
	J130	03-23		5000622	Screw	2
	J140	03-23		1700731	Coupling, 11 tooth	1
	J150	03-23		4800754	Lifting bracket	1
	J155	03-23		9007315-0604	Screw	1

Shaft, auxiliary flange and end cap

(C3V2)

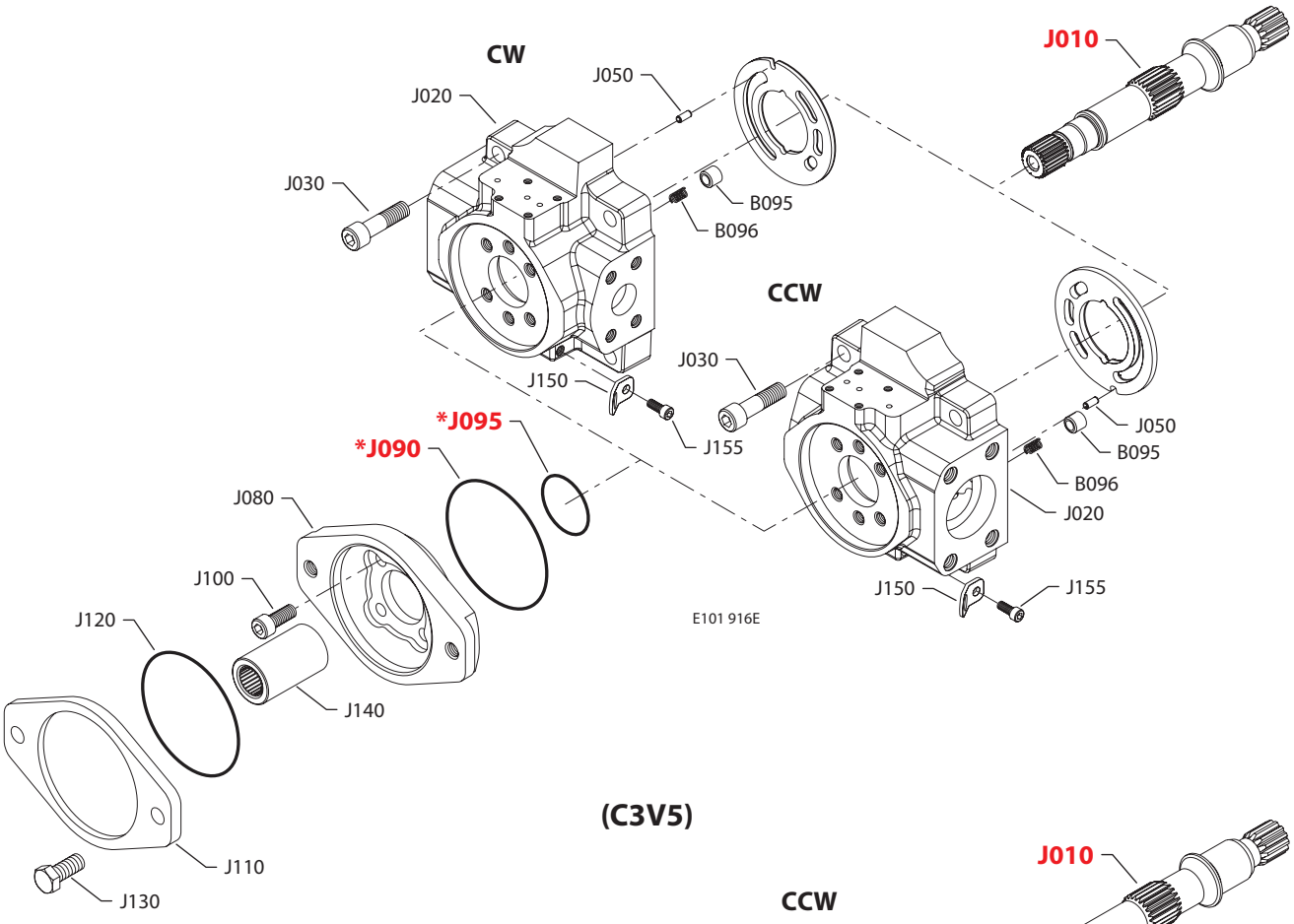

(C3V5)

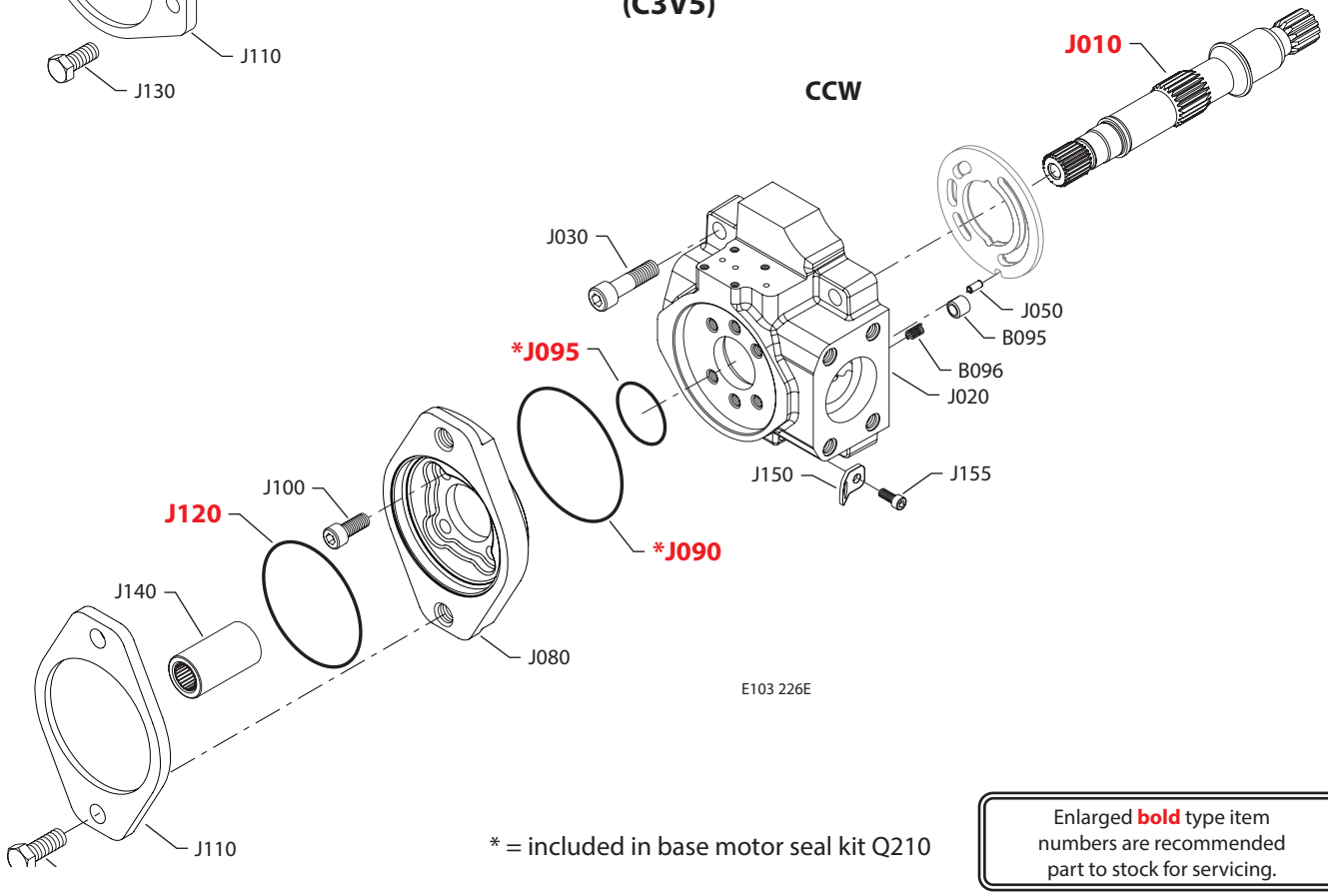

* = included in base motor seal kit Q210

Enlarged **bold** type item numbers are recommended part to stock for servicing.

Shaft, auxiliary flange and end cap

Shaft/auxiliary flange/end cap

Order code	Item	Date begin	Date end	Part number	Part name	Qty. per model/kit
C3V2	B095	03-23	15-39	1700256	Check valve poppet	1
	B096	03-23	15-39	1700257	Check valve spring	1
	J010	03-23	15-39	1700596	Shaft, 15 tooth with auxiliary drive	1
	J020	03-23	15-39	11077600	End cap, CW, radial ports, gen. 1, JRR (SB-2010-002)	1
	J020	03-23	15-39	11077606	End cap, CCW, radial ports, gen. 1, JRL (SB-2010-002)	1
	J030	03-23	15-39	5000181 (9007314-1210)	Screw	4
	J050	03-23	15-39	9004700-1907	Pin	1
	J080	03-23	15-39	4570210	Flange adapter, B pad	1
	J090	03-23	15-39	5000099 (9004100-1550)	O-ring	1
	J095	03-23	15-39	545434 (9004100-0420)	O-ring	1
	J100	03-23	15-39	5000489	Screw	4
	J110	03-23	15-39	4460370	Cover plate	1
	J120	03-23	15-39	9004104-0440	O-ring	1
	J130	03-23	15-39	9007200-5021	Screw	2
	J140	03-23	15-39	1701188	Coupling, 15 tooth	1
	J150	03-23	15-39	4800754	Lifting bracket	1
	J155	03-23		9007315-0604	Screw	1
C3V5	B095	03-23	15-39	1700256	Check valve poppet	1
	B096	03-23	15-39	1700257	Check valve spring	1
	J010	03-23	15-39	1700596	Shaft, 15 tooth with auxiliary drive	1
	J020	03-23	15-39	11077612	End cap, CW, radial ports, gen.1, JRR (SB-2010-002)	1
	J030	03-23	15-39	5000181 (9007314-1210)	Screw	4
	J050	03-23	15-39	9004700-1907	Pin	1
	J080	03-23	15-39	4570210	Flange adapter, B pad	1
	J090	03-23	15-39	5000099 (9004100-1550)	O-ring	1
	J095	03-23	15-39	545434 (9004100-0420)	O-ring	1
	J100	03-23	15-39	5000489	Screw	4
	J110	03-23	15-39	4460370	Cover plate	1
	J120	03-23	15-39	9004104-0440	O-ring	1
	J130	03-23	15-39	9007200-5021	Screw	2
	J140	03-23	15-39	1701188	Coupling, 15 tooth	1
	J150	03-23	15-39	4800754	Lifting bracket	1
	J155	03-23	15-39	9007315-0604	Screw	1

Shaft, auxiliary flange and end cap

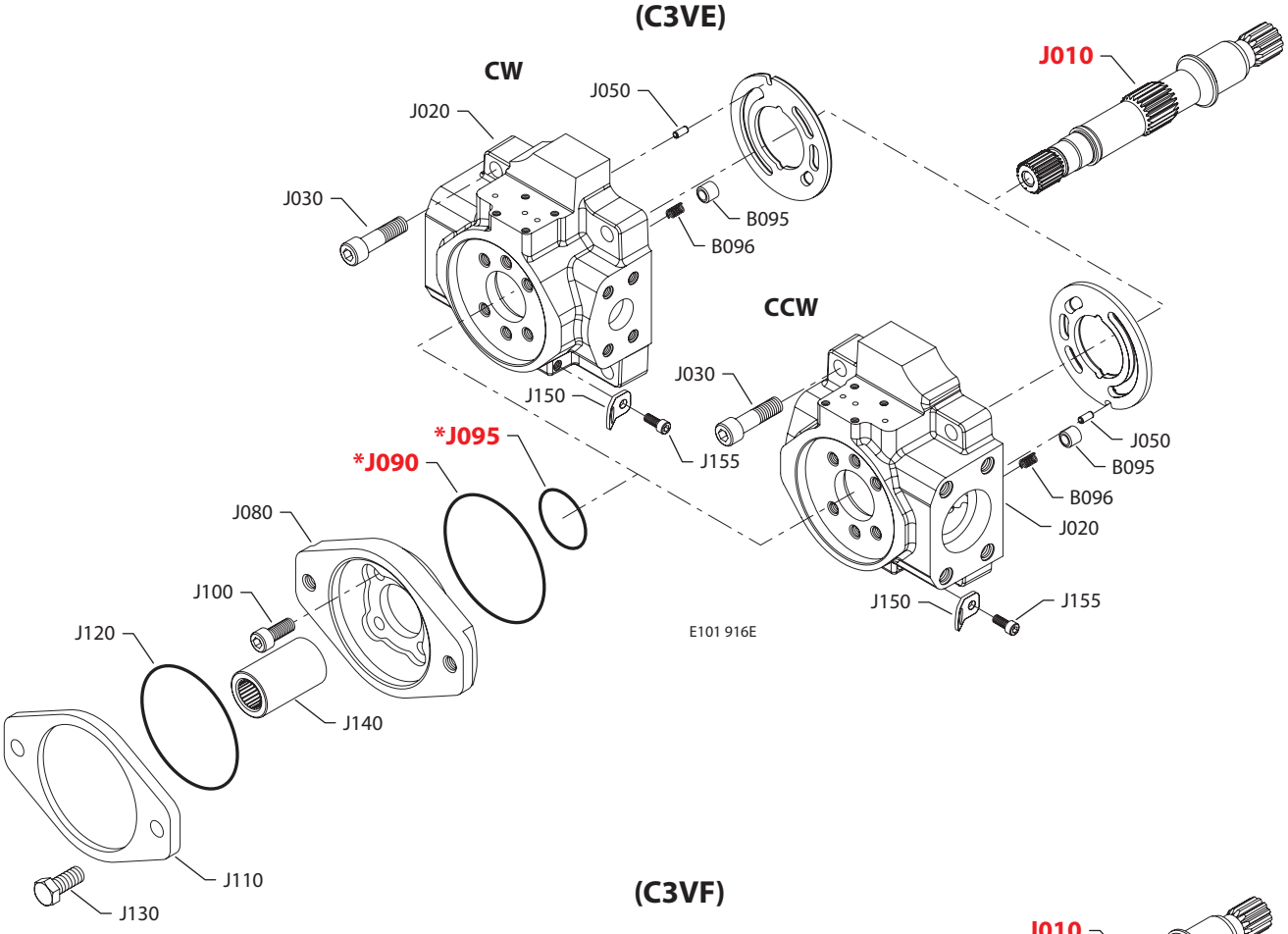

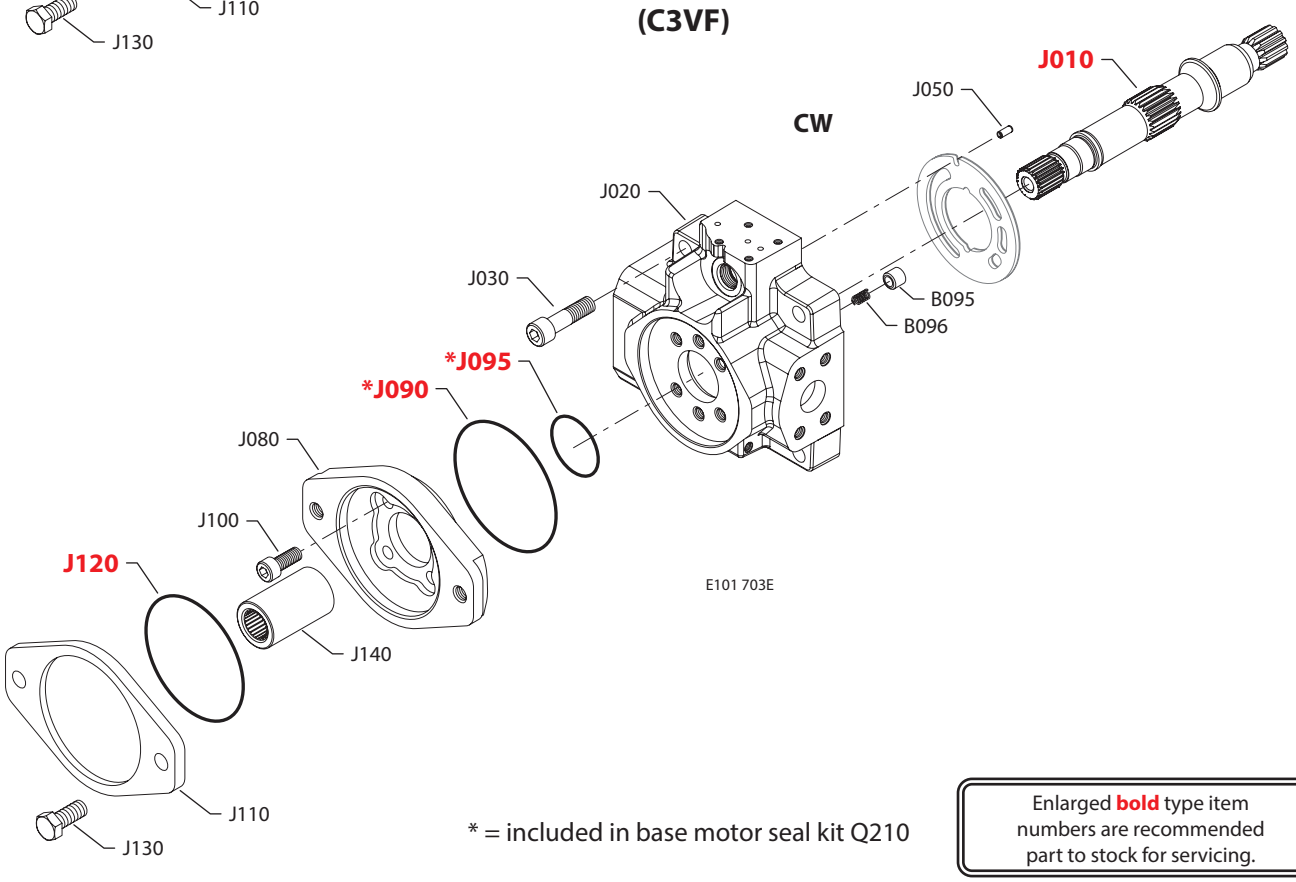

* = included in base motor seal kit Q210

Enlarged **bold** type item numbers are recommended part to stock for servicing.

Shaft, auxiliary flange and end cap

Shaft/auxiliary flange/end cap

Order code	Item	Date begin	Date end	Part number	Part name	Qty. per model/kit
C3VE	B095	03-23		1700256	Check valve poppet	1
	B096	03-23		1700257	Check valve spring	1
	J010	03-23		1700596	Shaft, 15 tooth with auxiliary drive	1
	J020	03-23		11092368	End cap, CW, radial ports, gen. 2, JRR (SB-2010-002)	1
	J020	03-23		11086934	End cap, CCW, radial ports, gen. 2, JRL (SB-2010-002)	1
	J030	03-23		5000181 (9007314-1210)	Screw	4
	J050	03-23		9004700-1907	Pin	1
	J080	03-23		4570210	Flange adapter, B pad	1
	J090	03-23		5000099 (9004100-1550)	O-ring	1
	J095	03-23		545434 (9004100-0420)	O-ring	1
	J100	03-23		5000489	Screw	4
	J110	03-23		4460370	Cover plate	1
	J120	03-23		9004104-0440	O-ring	1
	J130	03-23		9007200-5021	Screw	2
	J140	03-23		1701188	Coupling, 15 tooth	1
	J150	03-23		4800754	Lifting bracket	1
	J155	03-23		9007315-0604	Screw	1
C3VF	B095	12-07		1700256	Check valve poppet	1
	B096	12-07		1700257	Check valve spring	1
	J010	12-07		1700596	Shaft, 15 tooth with auxiliary drive	1
	J020	12-07		11095327	End cap, CW, radial ports, DL, gen. 2, JRR	1
	J030	12-07		5000181 (9007314-1210)	Screw	4
	J050	12-07		9004700-1907	Pin	1
	J080	12-07		4570210	Flange adapter, B pad	1
	J090	12-07		5000099 (9004100-1550)	O-ring	1
	J095	12-07		545434 (9004100-0420)	O-ring	1
	J100	12-07		5000489	Screw	4
	J110	12-07		4460370	Cover plate	1
	J120	12-07		9004104-0440	O-ring	1
	J130	12-07		9007200-5021	Screw	2
	J140	12-07		1701188	Coupling, 15 tooth	1
	J150	12-07		4800754	Lifting bracket	1
	J155	12-07		9007315-0604	Screw	1

Shaft, auxiliary flange and end cap

(C3VV)

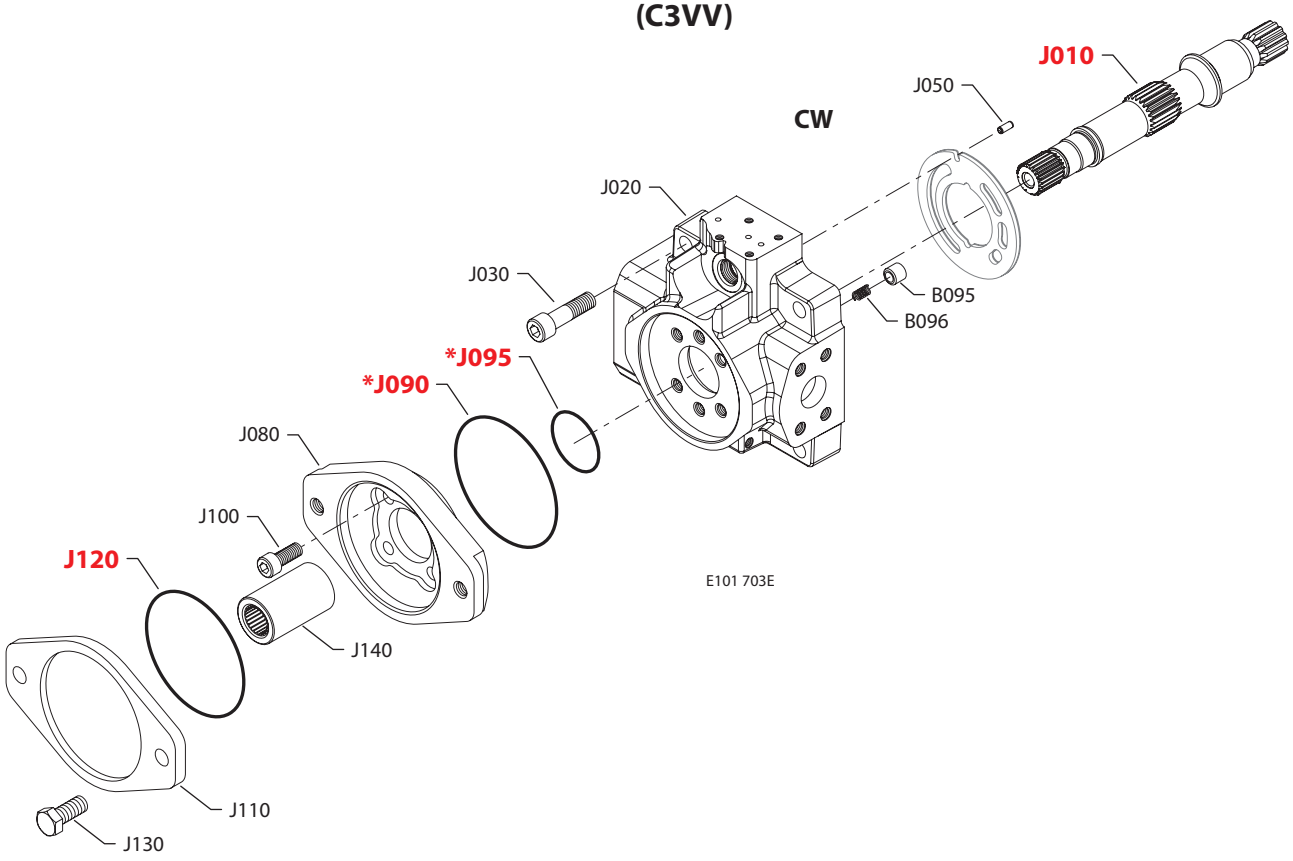

(C3VX)

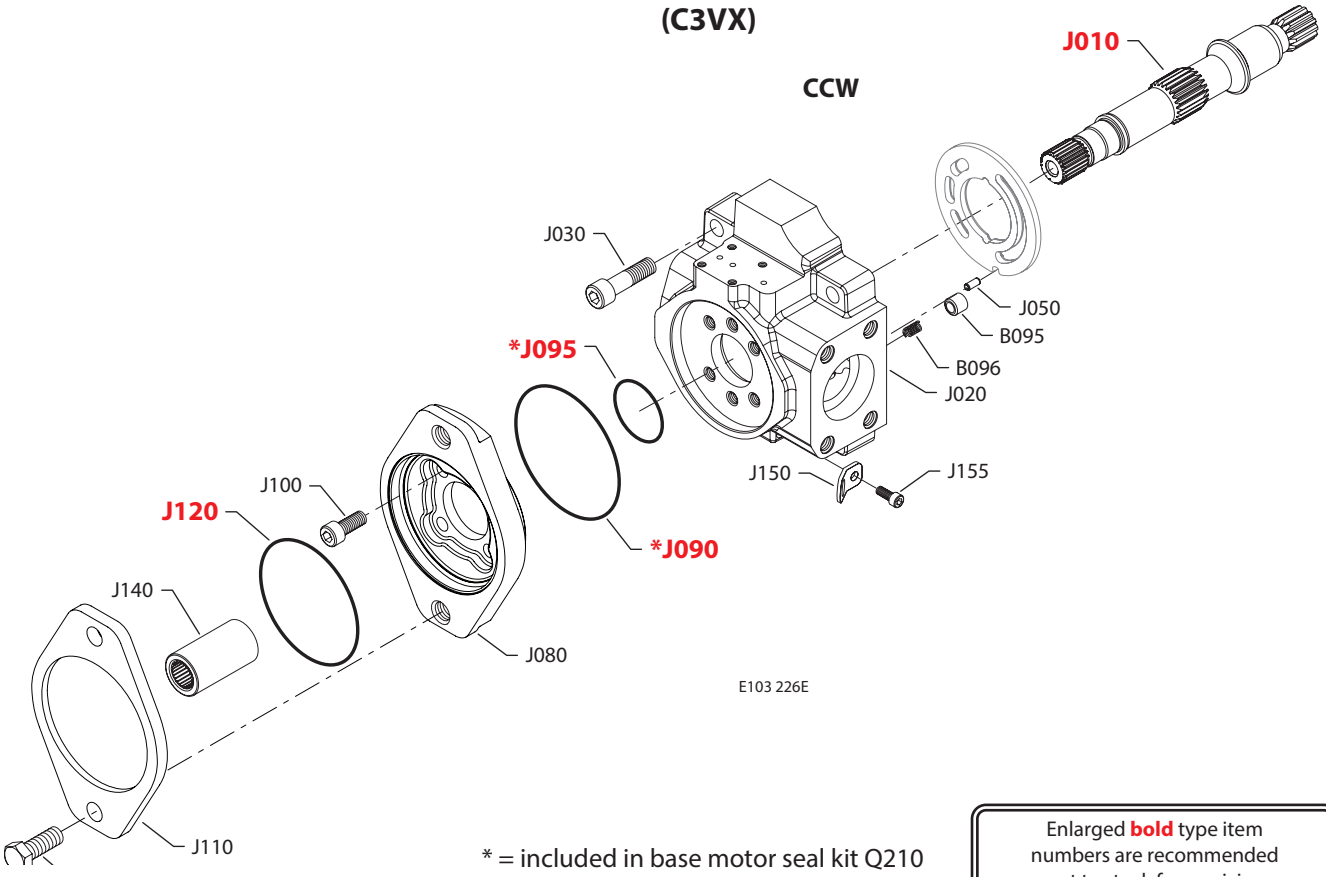

* = included in base motor seal kit Q210

Enlarged **bold** type item numbers are recommended part to stock for servicing.

Shaft, auxiliary flange and end cap

Shaft/auxiliary flange/end cap

Order code	Item	Date begin	Date end	Part number	Part name	Qty. per model/kit
C3VV	B095	10-05	15-37	1700256	Check valve poppet	1
	B096	10-05	15-37	1700257	Check valve spring	1
	J010	10-05	15-37	1700596	Shaft, 15 tooth with auxiliary drive	1
	J020	10-05	15-37	11077604	End cap, CW, radial ports, DL, gen. 1, JRR (SB-2010-002)	1
	J030	10-05	15-37	5000181 (9007314-1210)	Screw	4
	J050	10-05	15-37	9004700-1907	Pin	1
	J080	10-05	15-37	4570210	Flange adapter, B pad	1
	J090	10-05	15-37	5000099 (9004100-1550)	O-ring	1
	J095	10-05	15-37	545434 (9004100-0420)	O-ring	1
	J100	10-05	15-37	5000489	Screw	4
	J110	10-05	15-37	4460370	Cover plate	1
	J120	10-05	15-37	9004104-0440	O-ring	1
	J130	10-05	15-37	9007200-5021	Screw	2
	J140	10-05	15-37	1701188	Coupling, 15 tooth	1
	J150	10-05	15-37	4800754	Lifting bracket	1
	J155	10-05	15-37	9007315-0604	Screw	1
C3VX	B095	12-07		1700256	Check valve poppet	1
	B096	12-07		1700257	Check valve spring	1
	J010	12-07		1700596	Shaft, 15 tooth with auxiliary drive	1
	J020	12-07		11106867	End cap, CW, radial ports, gen. 2, JRR	1
	J030	12-07		5000181 (9007314-1210)	Screw	4
	J050	12-07		9004700-1907	Pin	1
	J080	12-07		4570210	Flange adapter, B pad	1
	J090	12-07		5000099 (9004100-1550)	O-ring	1
	J095	12-07		545434 (9004100-0420)	O-ring	1
	J100	12-07		5000489	Screw	4
	J110	12-07		4460370	Cover plate	1
	J120	12-07		9004104-0440	O-ring	1
	J130	12-07		9007200-5021	Screw	2
	J140	12-07		1701188	Coupling, 15 tooth	1
	J150	12-07		4800754	Lifting bracket	1
	J155	12-07		9007315-0604	Screw	1

Shaft, auxiliary flange and end cap

(K4A2 & K4AE)

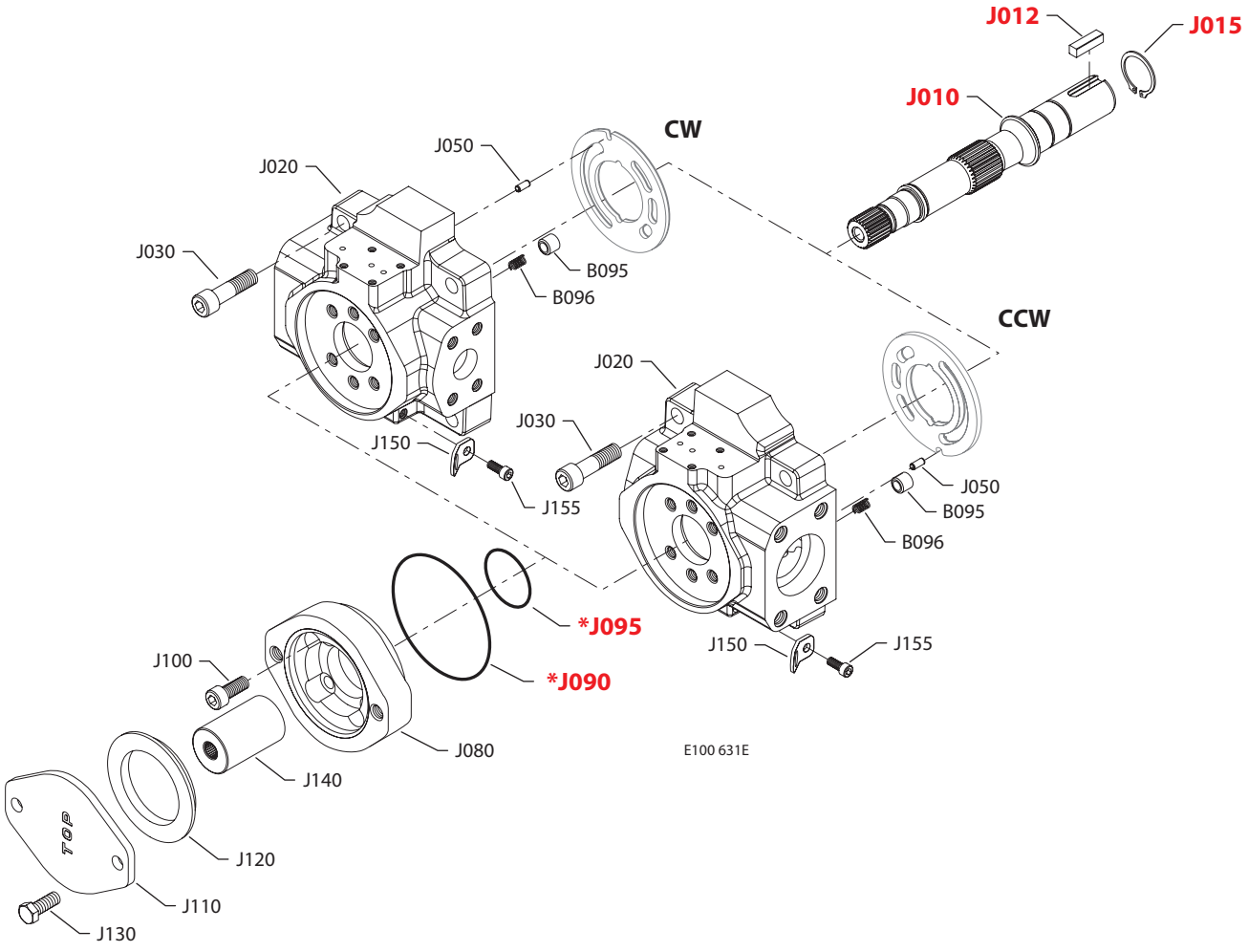

* = included in base motor seal kit Q210

Enlarged **bold** type item numbers are recommended part to stock for servicing.

Shaft, auxiliary flange and end cap

Shaft/auxiliary flange/end cap

Order code	Item	Date begin	Date end	Part number	Part name	Qty. per model/kit
K4A2	B095	03-23	15-39	1700256	Check valve poppet	1
	B096	03-23	15-39	1700257	Check valve spring	1
	J010	03-23	15-39	11085899	Shaft, straight key with auxiliary drive	1
	J012	03-23	15-39	5000364	Key	1
	J015	03-23	15-39	5000365	Retaining ring	1
	J020	03-23	15-39	11077600	End cap, CW, radial ports, gen. 1, JRR (SB-2010-002)	1
	J020	03-23	15-39	11077606	End cap, CCW, radial ports, gen. 1, JRL (SB-2010-002)	1
	J030	03-23	15-39	5000181 (9007314-1210)	Screw	4
	J050	03-23	15-39	9004700-1907	Pin	1
	J080	03-23	15-39	4570289	Flange adapter, A pad	1
	J090	03-23	15-39	5000099 (9004100-1550)	O-ring	1
	J095	03-23	15-39	545434 (9004100-0420)	O-ring	1
	J100	03-23	15-39	5000489	Screw	4
	J110	03-23	15-39	4460586	Cover plate	1
	J120	03-23	15-39	4800482	A pad seal	1
	J130	03-23	15-39	9007200-3712	Screw	2
	J140	03-23	15-39	1701185	Coupling, 9 tooth	1
	J150	03-23	15-39	4800754	Lifting bracket	1
	J155	03-23	15-39	9007315-0604	Screw	1
K4AE	B095	11-45		1700256	Check valve poppet	1
	B096	11-45		1700257	Check valve spring	1
	J010	11-45		11085899	Shaft, straight key with auxiliary drive	1
	J012	11-45		5000364	Key	1
	J015	11-45		5000365	Retaining ring	1
	J020	11-45		11092368	End cap, CW, radial ports, gen. 2, JRR	1
	J020	11-45		11086934	End cap, CCW, radial ports, gen. 2, JRL	1
	J030	11-45		5000181 (9007314-1210)	Screw	4
	J050	11-45		9004700-1907	Pin	1
	J080	11-45		4570289	Flange adapter, A pad	1
	J090	11-45		5000099 (9004100-1550)	O-ring	1
	J095	11-45		545434 (9004100-0420)	O-ring	1
	J100	11-45		5000489	Screw	4
	J110	11-45		4460586	Cover plate	1
	J120	11-45		4800482	A pad seal	1
	J130	11-45		9007200-3712	Screw	2
	J140	11-45		1701185	Coupling, 9 tooth	1
	J150	11-45		4800754	Lifting bracket	1
	J155	11-45		9007315-0604	Screw	1

Shaft, auxiliary flange and end cap

(K4AF & K4AV)

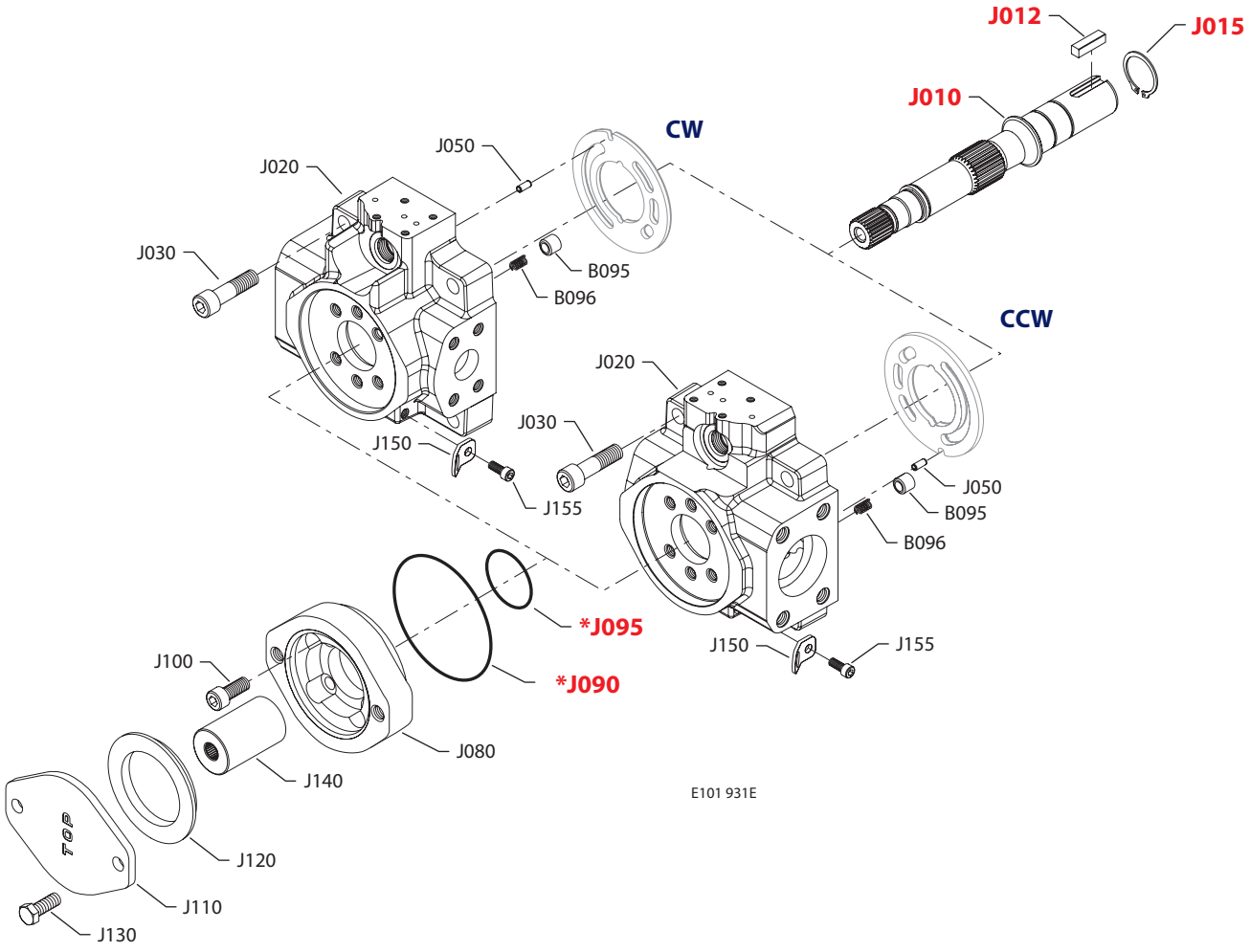

* = included in base motor seal kit Q210

Enlarged **bold** type item numbers are recommended part to stock for servicing.

Shaft, auxiliary flange and end cap

Shaft/auxiliary flange/end cap

Order code	Item	Date begin	Date end	Part number	Part name	Qty. per model/kit
K4AF	B095	11-47		1700256	Check valve poppet	1
	B096	11-47		1700257	Check valve spring	1
	J010	11-47		11085899	Shaft, straight key with auxiliary drive	1
	J012	11-47		5000364	Key	1
	J015	11-47		5000365	Retaining ring	1
	J020	11-47		11095327	End cap, CW, radial ports, DL, gen. 2, JRR	1
	J020	11-47		11086919	End cap, CCW, radial ports, DL, gen. 2, JRL	1
	J030	11-47		5000181 (9007314-1210)	Screw	4
	J050	11-47		9004700-1907	Pin	1
	J080	11-47		4570289	Flange adapter, A pad	1
	J090	11-47		5000099 (9004100-1550)	O-ring	1
	J095	11-47		545434 (9004100-0420)	O-ring	1
	J100	11-47		5000489	Screw	4
	J110	11-47		4460586	Cover plate	1
	J120	11-47		4800482	A pad seal	1
	J130	11-47		9007200-3712	Screw	2
	J140	11-47		1701185	Coupling, 9 tooth	1
	J150	11-47		4800754	Lifting bracket	1
	J155	11-47		9007315-0604	Screw	1
K4AV	B095	08-32	15-37	1700256	Check valve poppet	1
	B096	08-32	15-37	1700257	Check valve spring	1
	J010	08-32	15-37	11085899	Shaft, straight key with auxiliary drive	1
	J012	08-32	15-37	5000364	Key	1
	J015	08-32	15-37	5000365	Retaining ring	1
	J020	08-32	15-37	11077604	End cap, CW, radial ports, DL, gen. 1, JRL (SB-2010-002)	1
	J020	08-32	15-37	11077608	End cap, CCW, radial ports, DL, gen. 1, JRL (SB-2010-002)	1
	J030	08-32	15-37	5000181 (9007314-1210)	Screw	4
	J050	08-32	15-37	9004700-1907	Pin	1
	J080	08-32	15-37	4570289	Flange adapter, A pad	1
	J090	08-32	15-37	5000099 (9004100-1550)	O-ring	1
	J095	08-32	15-37	545434 (9004100-0420)	O-ring	1
	J100	08-32	15-37	5000489	Screw	4
	J110	08-32	15-37	4460586	Cover plate	1
	J120	08-32	15-37	4800482	A pad seal	1
	J130	08-32	15-37	9007200-3712	Screw	2
	J140	08-32	15-37	1701185	Coupling, 9 tooth	1
	J150	08-32	15-37	4800754	Lifting bracket	1
	J155	08-32	15-37	9007315-0604	Screw	1

Shaft, auxiliary flange and end cap

(K4B2 & K4BE)

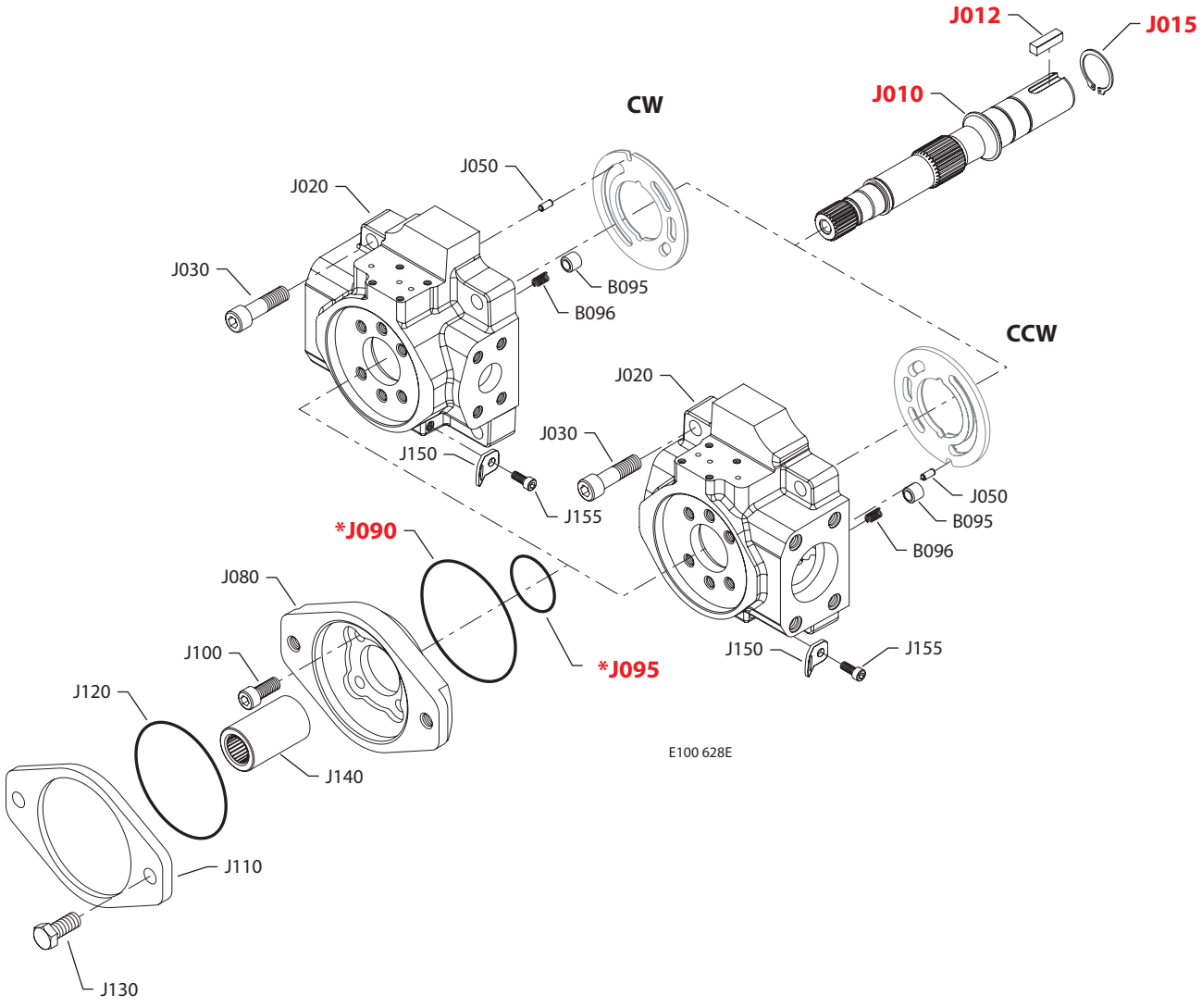

* = included in base motor seal kit Q210

Enlarged **bold** type item numbers are recommended part to stock for servicing.

Shaft, auxiliary flange and end cap

Shaft/auxiliary flange/end cap

Order code	Item	Date begin	Date end	Part number	Part name	Qty. per model/kit
K4B2	B095	03-23	15-39	1700256	Check valve poppet	1
	B096	03-23	15-39	1700257	Check valve spring	1
	J010	03-23	15-39	11085899	Shaft, straight key with auxiliary drive	1
	J012	03-23	15-39	5000364	Key	1
	J015	03-23	15-39	5000365	Retaining ring	1
	J020	03-23	15-39	11077600	End cap, CW, radial ports, gen. 1, JRR (SB-2010-002)	1
	J020	03-23	15-39	11077606	End cap, CCW, radial ports, gen. 1, JRL (SB-2010-002)	1
	J030	03-23	15-39	5000181 (9007314-1210)	Screw	4
	J050	03-23	15-39	9004700-1907	Pin	1
	J080	03-23	15-39	4570210	Flange adapter, B pad	1
	J090	03-23	15-39	5000099 (9004100-1550)	O-ring	1
	J095	03-23	15-39	545434 (9004100-0420)	O-ring	1
	J100	03-23	15-39	5000489	Screw	4
	J110	03-23	15-39	4460370	Cover plate	1
	J120	03-23	15-39	9004104-0440	O-ring	1
	J130	03-23	15-39	9007200-5021	Screw	2
	J140	03-23	15-39	1701187	Coupling, 13 tooth	1
	J150	03-23	15-39	4800754	Lifting bracket	1
	J155	03-23	15-39	9007315-0604	Screw	1
K4BE	B095	11-45		1700256	Check valve poppet	1
	B096	11-45		1700257	Check valve spring	1
	J010	11-45		11085899	Shaft, straight key with auxiliary drive	1
	J012	11-45		5000364	Key	1
	J015	11-45		5000365	Retaining ring	1
	J020	11-45		11092368	End cap, CW, radial ports, gen. 2, JRR	1
	J020	11-45		11086934	End cap, CCW, radial ports, gen. 2, JRL	1
	J030	11-45		5000181 (9007314-1210)	Screw	4
	J050	11-45		9004700-1907	Pin	1
	J080	11-45		4570210	Flange adapter, B pad	1
	J090	11-45		5000099 (9004100-1550)	O-ring	1
	J095	11-45		545434 (9004100-0420)	O-ring	1
	J100	11-45		5000489	Screw	4
	J110	11-45		4460370	Cover plate	1
	J120	11-45		9004104-0440	O-ring	1
	J130	11-45		9007200-5021	Screw	2
	J140	11-45		1701187	Coupling, 13 tooth	1
	J150	11-45		4800754	Lifting bracket	1
	J155	11-45		9007315-0604	Screw	1

Shaft, auxiliary flange and end cap

(K4BF & K4BV)

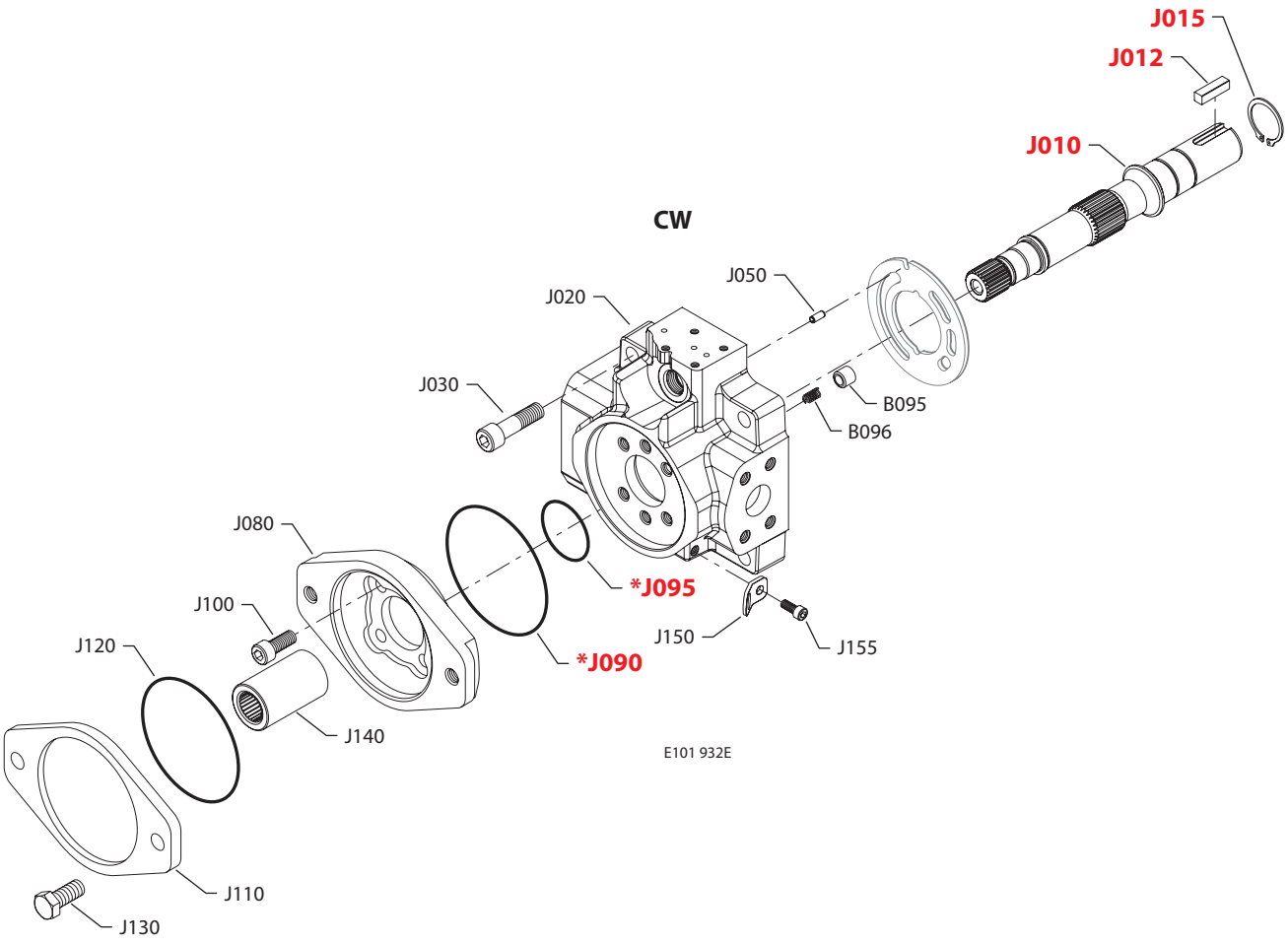

* = included in base motor seal kit Q210

Enlarged **bold** type item numbers are recommended part to stock for servicing.

Shaft, auxiliary flange and end cap

Shaft/auxiliary flange/end cap

Order code	Item	Date begin	Date end	Part number	Part name	Qty. per model/kit
K4BF	B095	11-47		1700256	Check valve poppet	1
	B096	11-47		1700257	Check valve spring	1
	J010	11-47		11085899	Shaft, straight key with auxiliary drive	1
	J012	11-47		5000364	Key	1
	J015	11-47		5000365	Retaining ring	1
	J020	11-47		11095327	End cap, CW, radial ports, DL, gen. 2, JRR	1
	J030	11-47		5000181 (9007314-1210)	Screw	4
	J050	11-47		9004700-1907	Pin	1
	J080	11-47		4570210	Flange adapter, B pad	1
	J090	11-47		5000099 (9004100-1550)	O-ring	1
	J095	11-47		545434 (9004100-0420)	O-ring	1
	J100	11-47		5000489	Screw	4
	J110	11-47		4460370	Cover plate	1
	J120	11-47		9004104-0440	O-ring	1
	J130	11-47		9007200-5021	Screw	2
	J140	11-47		1701187	Coupling, 13 tooth	1
	J150	11-47		4800754	Lifting bracket	1
	J155	11-47		9007315-0604	Screw	1
K4BV	B095	03-23	15-37	1700256	Check valve poppet	1
	B096	03-23	15-37	1700257	Check valve spring	1
	J010	03-23	15-37	11085899	Shaft, straight key with auxiliary drive	1
	J012	03-23	15-37	5000364	Key	1
	J015	03-23	15-37	5000365	Retaining ring	1
	J020	03-23	15-37	11077604	End cap, CW, radial ports, DL, gen. 1, JRR (SB-2010-002)	1
	J030	03-23	15-37	5000181 (9007314-1210)	Screw	4
	J050	03-23	15-37	9004700-1907	Pin	1
	J080	03-23	15-37	4570210	Flange adapter, B pad	1
	J090	03-23	15-37	5000099 (9004100-1550)	O-ring	1
	J095	03-23	15-37	545434 (9004100-0420)	O-ring	1
	J100	03-23	15-37	5000489	Screw	4
	J110	03-23	15-37	4460370	Cover plate	1
	J120	03-23	15-37	9004104-0440	O-ring	1
	J130	03-23	15-37	9007200-5021	Screw	2
	J140	03-23	15-37	1701187	Coupling, 13 tooth	1
	J150	03-23	15-37	4800754	Lifting bracket	1
	J155	03-23	15-37	9007315-0604	Screw	1

Shaft, auxiliary flange and end cap

(K4C2 & K4CE)

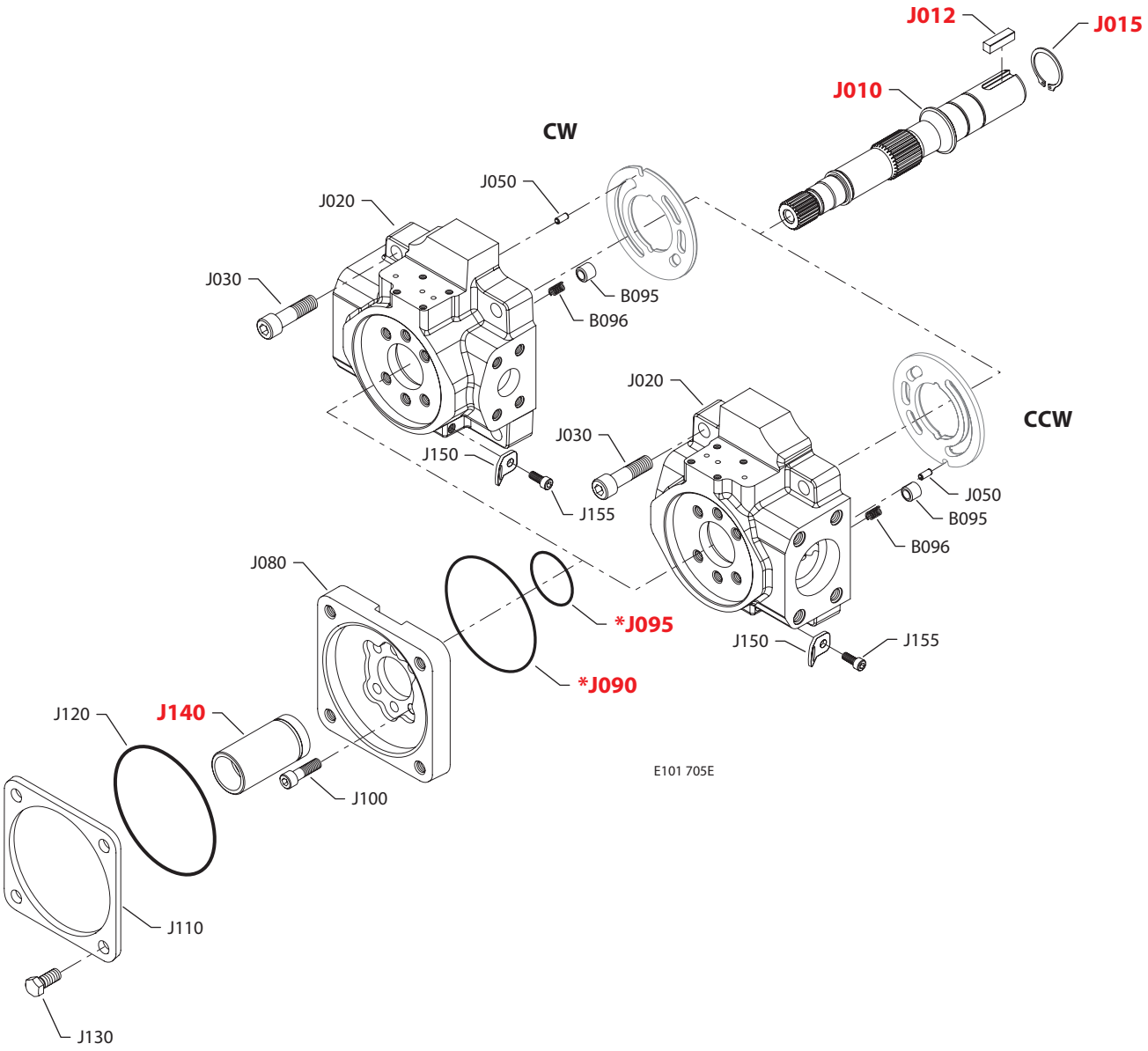

* = included in base motor seal kit Q210

Enlarged **bold** type item numbers are recommended part to stock for servicing.

Shaft, auxiliary flange and end cap

Shaft/auxiliary flange/end cap

Order code	Item	Date begin	Date end	Part number	Part name	Qty. per model/kit
K4C2	B095	03-23		1700256	Check valve poppet	1
	B096	03-23		1700257	Check valve spring	1
	J010	03-23		11085899	Shaft, straight key with auxiliary drive	1
	J012	03-23		5000364	Key	1
	J015	03-23		5000365	Retaining ring	1
	J020	03-23	15-39	11077600	End cap, CW, radial ports, gen. 1, JRR (SB-2010-002)	1
	J020	03-23	15-39	11077606	End cap, CCW, radial ports, gen. 1, JRL (SB-2010-002)	1
	J030	03-23		5000181 (9007314-1210)	Screw	4
	J050	03-23		9004700-1907	Pin	1
	J080	03-23		11039356	Flange adapter, C pad (SB-2008-052)	1
	J090	03-23		5000099 (9004100-1550)	O-ring	1
	J095	03-23		545434 (9004100-0420)	O-ring	1
	J100	03-23		5000489	Screw	6
	J110	03-23		8800406	Cover plate	1
	J120	03-23		9004100-0480	O-ring	1
	J130	03-23		9007200-5021	Screw	2
	J140	03-23		4570133	Coupling, 14 tooth	1
	J150	03-23		4800754	Lifting bracket	1
	J155	03-23		9007315-0604	Screw	1
K4CE	B095	11-45		1700256	Check valve poppet	1
	B096	11-45		1700257	Check valve spring	1
	J010	11-45		11085899	Shaft, straight key with auxiliary drive	1
	J012	11-45		5000364	Key	1
	J015	11-45		5000365	Retaining ring	1
	J020	11-45		11092368	End cap, CW, radial ports, gen. 2, JRR	1
	J020	11-45		11086934	End cap, CCW, radial ports, gen. 2, JRL	1
	J030	11-45		5000181 (9007314-1210)	Screw	4
	J050	11-45		9004700-1907	Pin	1
	J080	11-45		11039356	Flange adapter, C pad	1
	J090	11-45		5000099 (9004100-1550)	O-ring	1
	J095	11-45		545434 (9004100-0420)	O-ring	1
	J100	11-45		5000489	Screw	6
	J110	11-45		8800406	Cover plate	1
	J120	11-45		9004104-0480	O-ring	1
	J130	11-45		9007200-5021	Screw	2
	J140	11-45		4570133	Coupling, 14 tooth	1
	J150	11-45		4800754	Lifting bracket	1
	J155	11-45		9007315-0604	Screw	1

Shaft, auxiliary flange and end cap

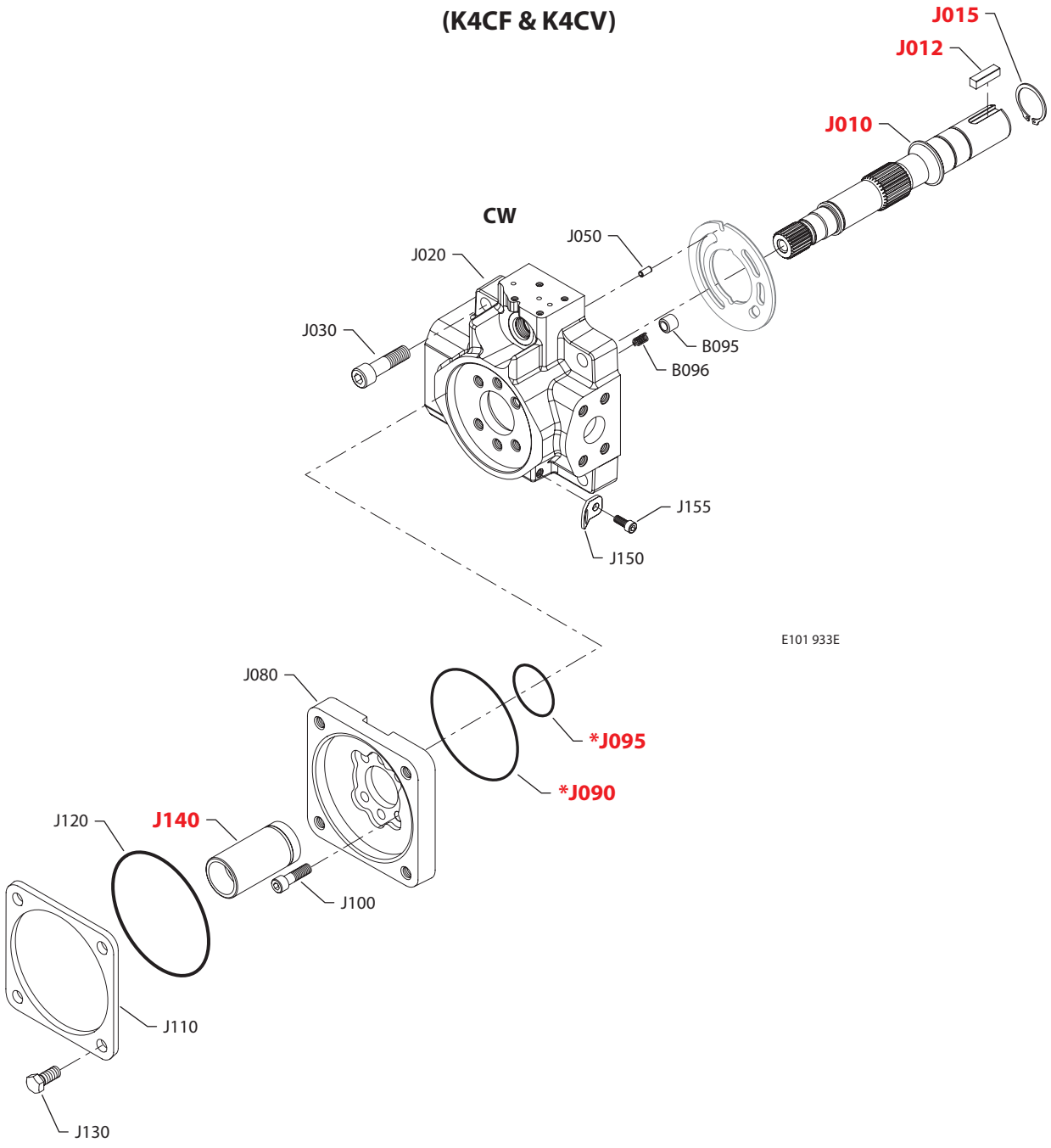

* = included in base motor seal kit Q210

Enlarged **bold** type item numbers are recommended part to stock for servicing.

Shaft, auxiliary flange and end cap

Shaft/auxiliary flange/end cap

Order code	Item	Date begin	Date end	Part number	Part name	Qty. per model/kit
K4CF	B095	11-47		1700256	Check valve poppet	1
	B096	11-47		1700257	Check valve spring	1
	J010	11-47		11085899	Shaft, straight key with auxiliary drive	1
	J012	11-47		5000364	Key	1
	J015	11-47		5000365	Retaining ring	1
	J020	11-47		11095327	End cap, CW, radial ports, DL, gen. 2, JRR	1
	J030	11-47		5000181 (9007314-1210)	Screw	4
	J050	11-47		9004700-1907	Pin	1
	J080	11-47		11039356	Flange adapter, C pad	1
	J090	11-47		5000099 (9004100-1550)	O-ring	1
	J095	11-47		545434 (9004100-0420)	O-ring	1
	J100	11-47		5000489	Screw	6
	J110	11-47		8800406	Cover plate	1
	J120	11-47		9004100-0480	O-ring	1
	J130	11-47		9007200-5021	Screw	4
	J140	11-47		4570133	Coupling, 14 tooth	1
	J150	11-47		4800754	Lifting bracket	1
	J155	11-47		9007315-0604	Screw	1
K4CV	B095	10-28	15-37	1700256	Check valve poppet	1
	B096	10-28	15-37	1700257	Check valve spring	1
	J010	10-28	15-37	11085899	Shaft, straight key with auxiliary drive	1
	J012	10-28	15-37	5000364	Key	1
	J015	10-28	15-37	5000365	Retaining ring	1
	J020	10-28	15-37	11077604	End cap, CW, radial ports, DL, gen. 1, JRR (SB-2010-002)	1
	J030	10-28	15-37	5000181 (9007314-1210)	Screw	4
	J050	10-28	15-37	9004700-1907	Pin	1
	J080	10-28	15-37	11039356	Flange adapter, C pad	1
	J090	10-28	15-37	5000099 (9004100-1550)	O-ring	1
	J095	10-28	15-37	545434 (9004100-0420)	O-ring	1
	J100	10-28	15-37	5000489	Screw	6
	J110	10-28	15-37	8800406	Cover plate	1
	J120	10-28	15-37	9004100-0480	O-ring	1
	J130	10-28	15-37	9007200-5021	Screw	4
	J140	10-28	15-37	4570133	Coupling, 14 tooth	1
	J150	10-28	15-37	4800754	Lifting bracket	1
	J155	10-28	15-37	9007315-0604	Screw	1

Shaft, auxiliary flange and end cap

(K4GE)

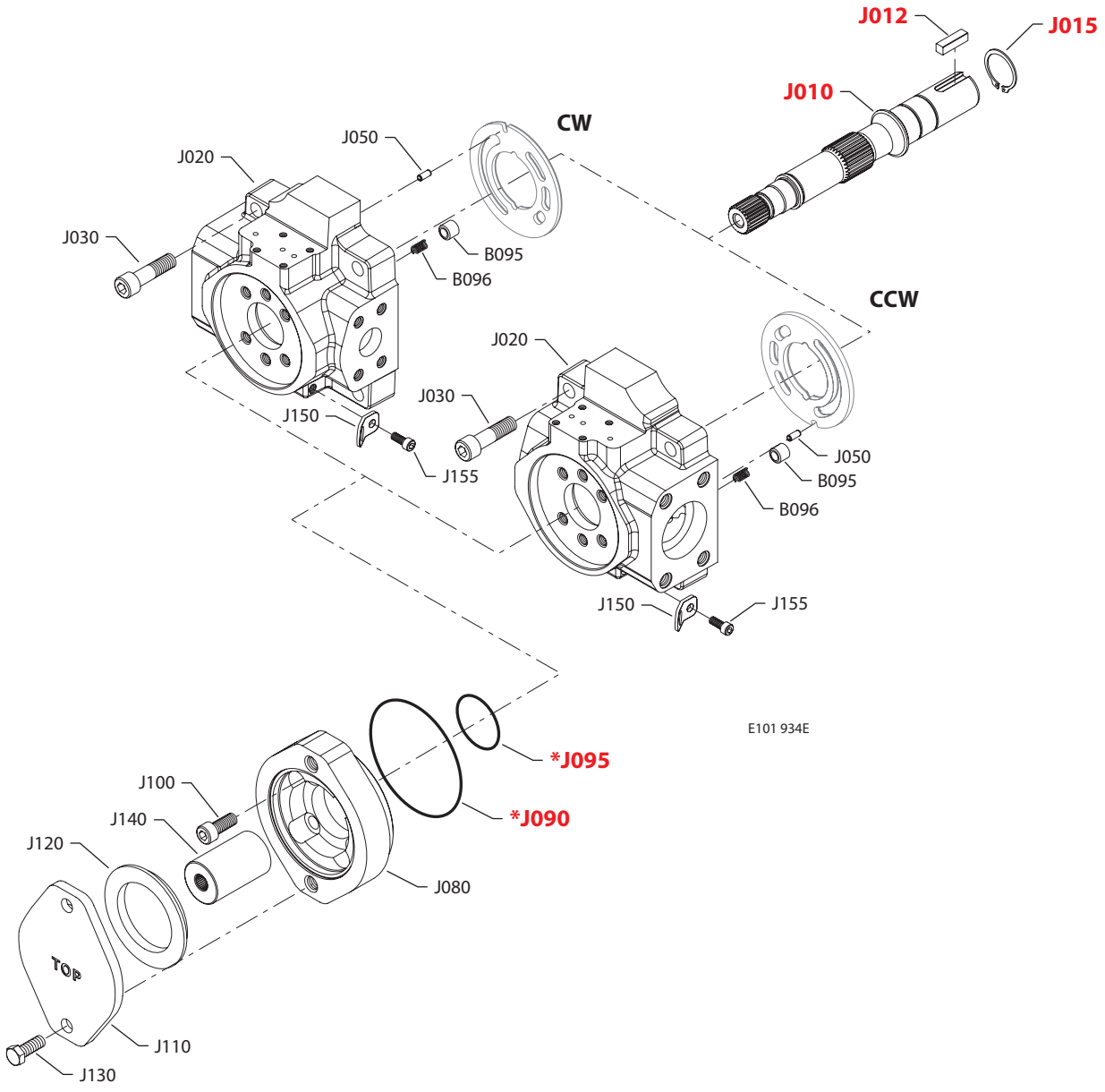

* = included in base motor seal kit Q210

Enlarged **bold** type item numbers are recommended part to stock for servicing.

Shaft, auxiliary flange and end cap

Shaft/auxiliary flange/end cap

Order code	Item	Date begin	Date end	Part number	Part name	Qty. per model/kit
K4GE	B095	11-45		1700256	Check valve poppet	1
	B096	11-45		1700257	Check valve spring	1
	J010	11-45		11085899	Shaft, straight key with auxiliary drive	1
	J012	11-45		5000364	Key	1
	J015	11-45		5000365	Retaining ring	1
	J020	11-45		11092368	End cap, CW, radial ports, gen. 2, JRR	1
	J020	11-45		11086934	End cap, CCW, radial ports, gen. 2, JRL	1
	J030	11-45		5000181 (9007314-1210)	Screw	4
	J050	11-45		9004700-1907	Pin	1
	J080	11-45		4570289	Flange adapter, A pad	1
	J090	11-45		5000099 (9004100-1550)	O-ring	1
	J095	11-45		545434 (9004100-0420)	O-ring	1
	J100	11-45		5000489	Screw	4
	J110	11-45		4460586	Cover plate	1
	J120	11-45		4800482	A pad seal	1
	J130	11-45		9007200-3712	Screw	2
	J140	11-45		1701186	Coupling, 11 tooth	1
	J150	11-45		4800754	Lifting bracket	1
	J155	11-45		9007315-0604	Screw	1

Shaft, auxiliary flange and end cap

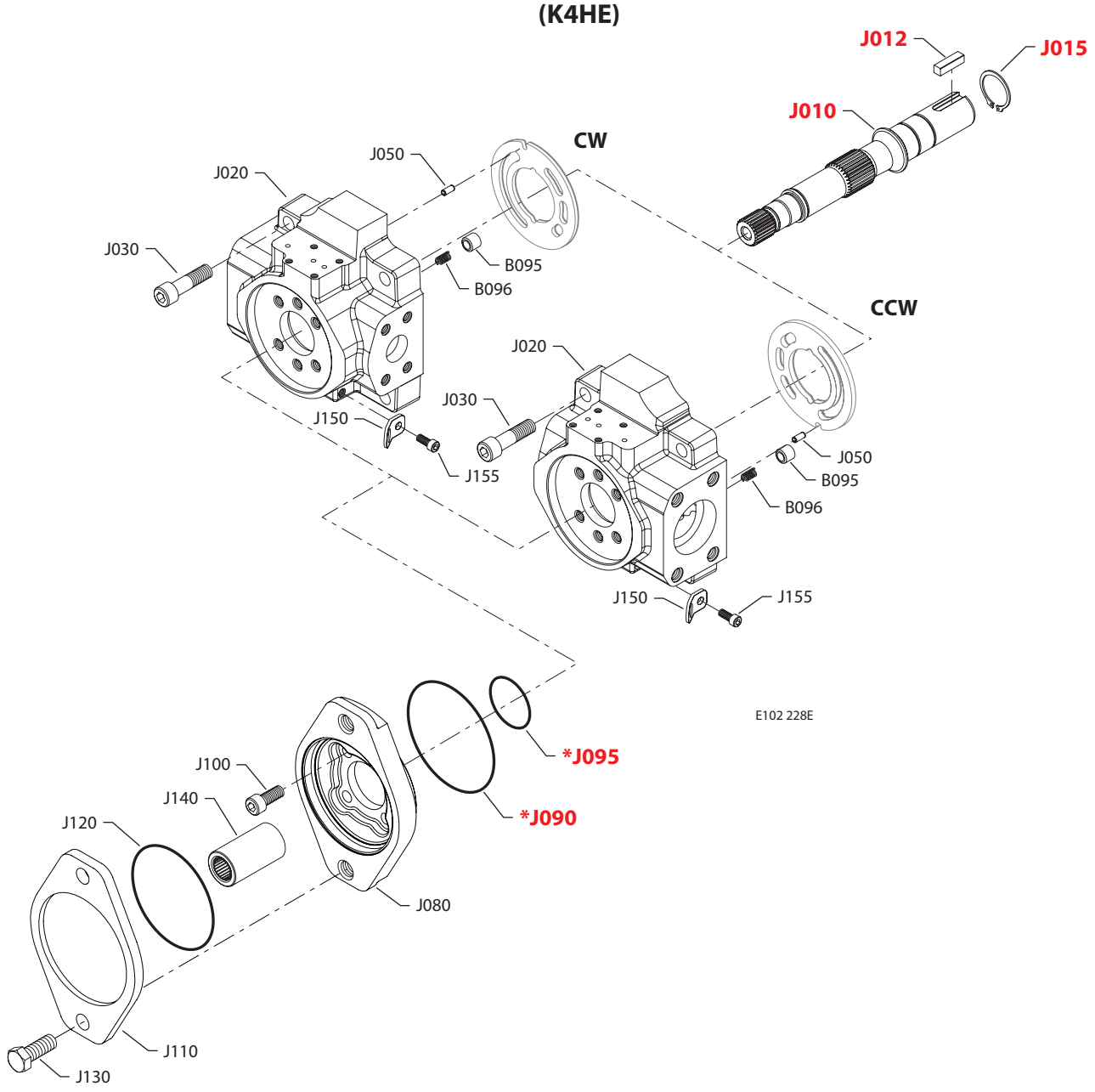

* = included in base motor seal kit Q210

Enlarged **bold** type item numbers are recommended part to stock for servicing.

Shaft, auxiliary flange and end cap

Shaft/auxiliary flange/end cap

Order code	Item	Date begin	Date end	Part number	Part name	Qty. per model/kit
K4HE	B095	11-45		1700256	Check valve poppet	1
	B096	11-45		1700257	Check valve spring	1
	J010	11-45		11085899	Shaft, straight key with auxiliary drive	1
	J012	11-45		5000364	Key	1
	J015	11-45		5000365	Retaining ring	1
	J020	11-45		11092368	End cap, CW, radial ports, gen. 2, JRR	1
	J020	11-45		11086934	End cap, CCW, radial ports, gen. 2, JRL	1
	J030	11-45		5000181 (9007314-1210)	Screw	4
	J050	11-45		9004700-1907	Pin	1
	J080	11-45		4570210	Flange adapter, B pad	1
	J090	11-45		5000099 (9004100-1550)	O-ring	1
	J095	11-45		545434 (9004100-0420)	O-ring	1
	J100	11-45		5000489	Screw	4
	J110	11-45		4460370	Cover plate	1
	J120	11-45		9004104-0440	O-ring	1
	J130	11-45		9007200-5021	Screw	2
	J140	11-45		1701188	Coupling, 15 tooth	1
	J150	11-45		4800754	Lifting bracket	1
	J155	11-45		9007315-0604	Screw	1

Shaft, auxiliary flange and end cap

(K4J2 & K4JE)

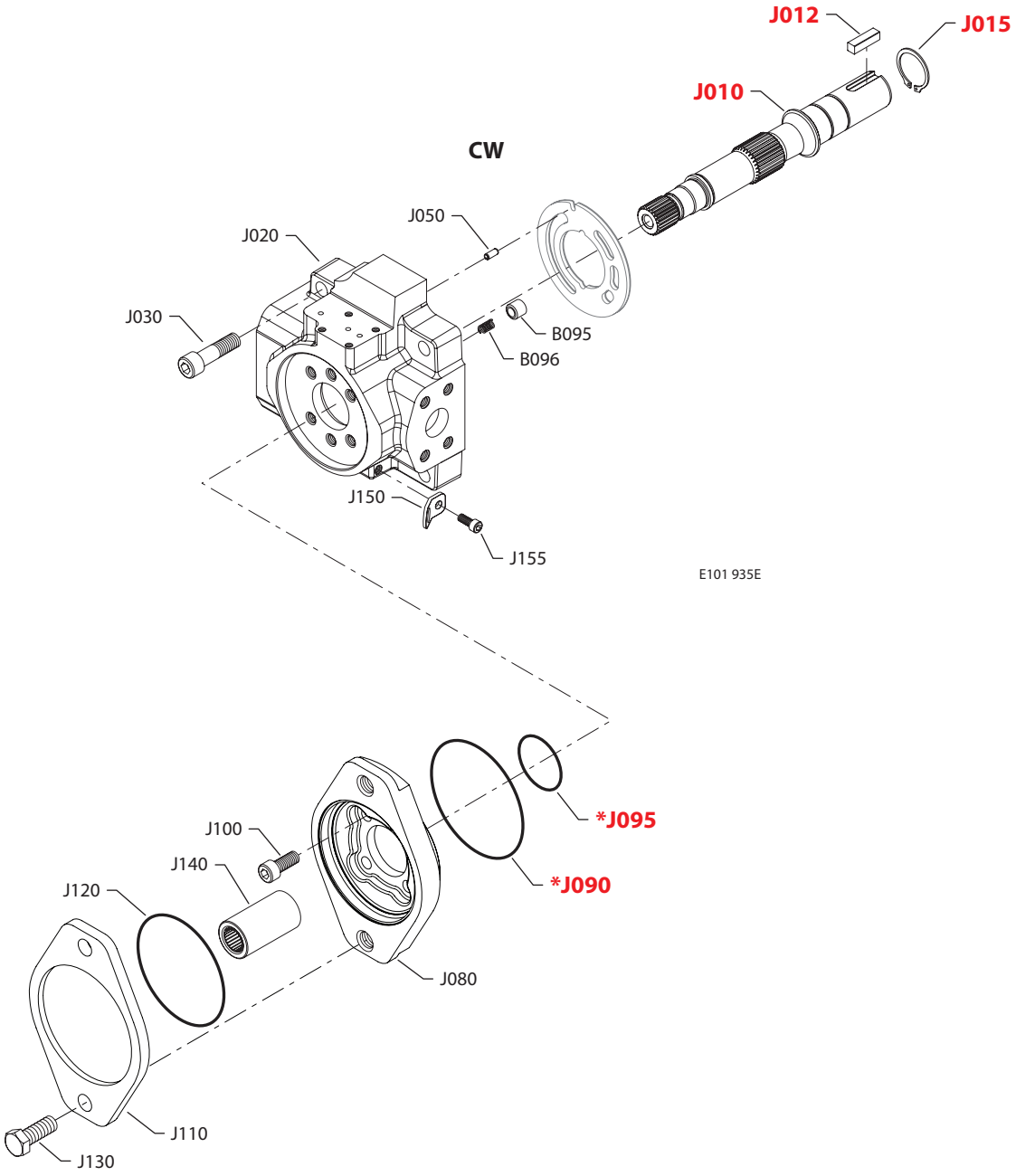

* = included in base motor seal kit Q210

Enlarged **bold** type item numbers are recommended part to stock for servicing.

Shaft, auxiliary flange and end cap

Shaft/auxiliary flange/end cap

Order code	Item	Date begin	Date end	Part number	Part name	Qty. per model/kit
K4J2	B095	03-23	15-39	1700256	Check valve poppet	1
	B096	03-23	15-39	1700257	Check valve spring	1
	J010	03-23	15-39	11085899	Shaft, straight key with auxiliary drive	1
	J012	03-23	15-39	5000364	Key	1
	J015	03-23	15-39	5000365	Retaining ring	1
	J020	03-23	15-39	11077600	End cap, CW, radial ports, gen. 1, JRR (SB-2010-002)	1
	J030	03-23	15-39	5000181 (9007314-1210)	Screw	4
	J050	03-23	15-39	9004700-1907	Pin	1
	J080	03-23	15-39	4570210	Flange adapter, B pad	1
	J090	03-23	15-39	5000099 (9004100-1550)	O-ring	1
	J095	03-23	15-39	545434 (9004100-0420)	O-ring	1
	J100	03-23	15-39	5000489	Screw	4
	J110	03-23	15-39	4460370	Cover plate	1
	J120	03-23	15-39	9004104-0440	O-ring	1
	J130	03-23	15-39	9007200-5021	Screw	2
	J140	03-23	15-39	1701187	Coupling, 13 tooth	1
	J150	03-23	15-39	4800754	Lifting bracket	1
	J155	03-23	15-39	9007315-0604	Screw	1
K4JE	B095	12-05		1700256	Check valve poppet	1
	B096	12-05		1700257	Check valve spring	1
	J010	12-05		11085899	Shaft, straight key with auxiliary drive	1
	J012	12-05		5000364	Key	1
	J015	12-05		5000365	Retaining ring	1
	J020	12-05		11092368	End cap, CW, radial ports, gen. 2, JRR	1
	J030	12-05		5000181 (9007314-1210)	Screw	4
	J050	12-05		9004700-1907	Pin	1
	J080	12-05		4570210	Flange adapter, B pad	1
	J090	12-05		5000099 (9004100-1550)	O-ring	1
	J095	12-05		545434 (9004100-0420)	O-ring	1
	J100	12-05		5000489	Screw	4
	J110	12-05		4460370	Cover plate	1
	J120	12-05		9004104-0440	O-ring	1
	J130	12-05		9007200-5021	Screw	2
	J140	12-05		1701187	Coupling, 13 tooth	1
	J150	12-05		4800754	Lifting bracket	1
	J155	12-05		9007315-0604	Screw	1

Shaft, auxiliary flange and end cap

(K4N2)

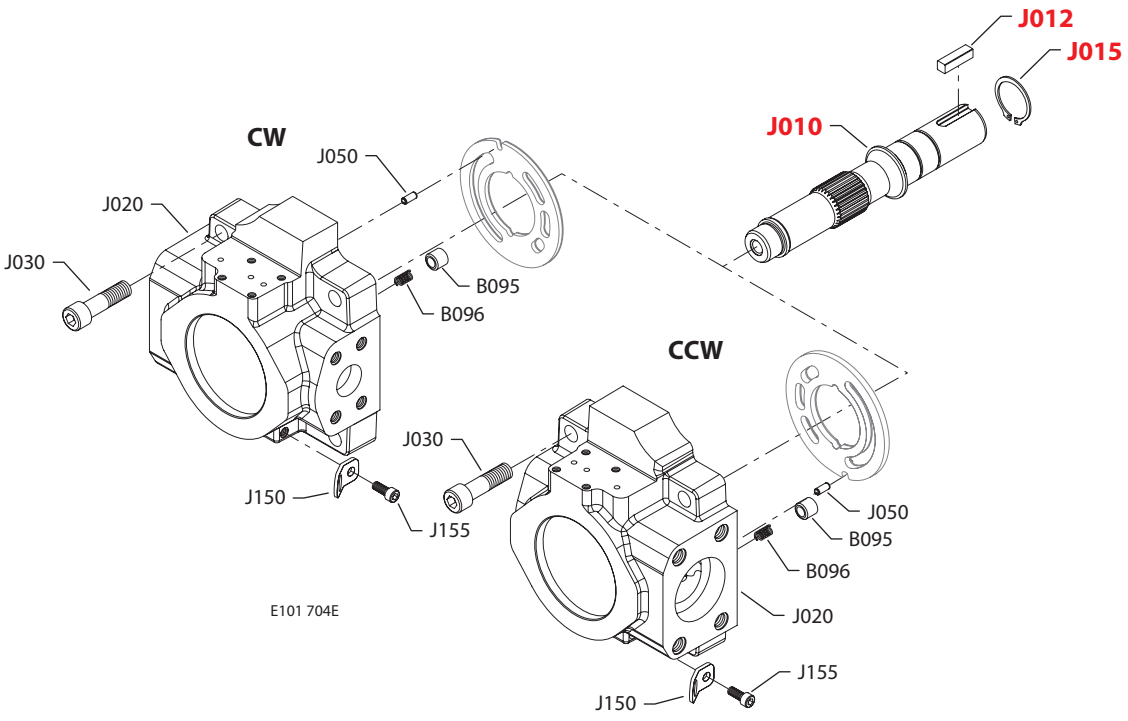

(K4N3)

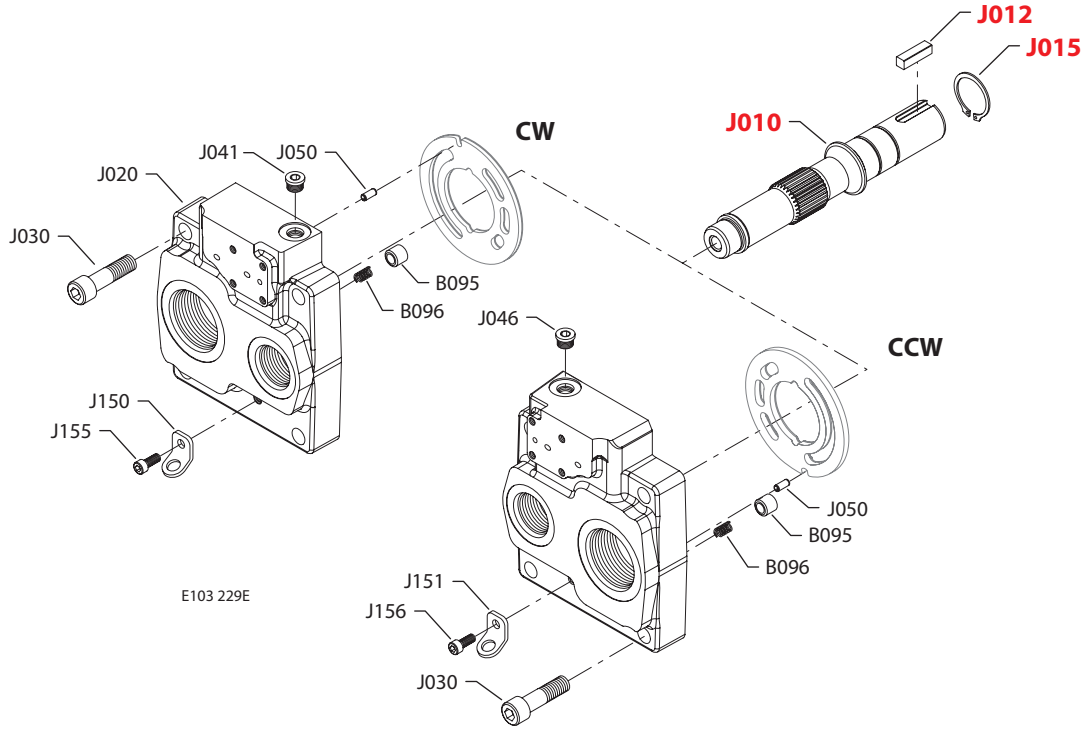

* = included in base motor seal kit Q210

Enlarged **bold** type item numbers are recommended part to stock for servicing.

Shaft, auxiliary flange and end cap

Shaft/auxiliary flange/end cap

Order code	Item	Date begin	Date end	Part number	Part name	Qty. per model/kit
K4N2	B095	03-23	15-39	1700256	Check valve poppet	1
	B096	03-23	15-39	1700257	Check valve spring	1
	J010	03-23	15-39	11086032	Shaft, straight key without auxiliary drive	1
	J012	03-23	15-39	5000364	Key	1
	J015	03-23	15-39	5000365	Retaining ring	1
	J020	03-23	15-39	11068228	End cap, CW, radial ports, gen. 1, JRR (SB-2010-002)	1
	J020	03-23	15-39	11077605	End cap, CCW, radial ports, gen. 1, JRL (SB-2010-002)	1
	J030	03-23	15-39	5000181 (9007314-1210)	Screw	4
	J050	03-23	15-39	9004700-1907	Pin	1
	J150	03-23	15-39	4800754	Lifting bracket	1
	J155	03-23	15-39	9007315-0604	Screw	1
K4N3	B095	03-23	15-36	1700256	Check valve poppet	1
	B096	03-23	15-36	1700257	Check valve spring	1
	J010	03-23	15-36	11086032	Shaft, straight key without auxiliary drive	1
	J012	03-23	15-36	5000364	Key	1
	J015	03-23	15-36	5000365	Retaining ring	1
	J020	03-23	15-36	11077590	End cap,CW, axial ports, gen. 1, JRR (SB-2010-002)	1
	J020	03-23	15-36	11077594	End cap, CCW, axial ports, gen. 1, JRL (SB-2010-002)	1
	J030	03-23	15-36	5000181 (9007314-1210)	Screw	4
	J041	03-23	15-36	140644 (9005110-5600)	Plug assembly, JRR	1
	J046	03-23	15-36	140644 (9005110-5600)	Plug assembly, JRL	1
	J050	03-23	15-36	9004700-1907	Pin	1
	J150	03-23	15-36	4800754	Lifting bracket, JRR	1
	J151	03-23	15-36	4800754	Lifting bracket, JRL	1
	J155	03-23	15-36	9007315-0604	Screw, JRR	1
	J156	03-23	15-36	9007315-0604	Screw, JRL	1

Shaft, auxiliary flange and end cap

(K4N4 & K4N9)

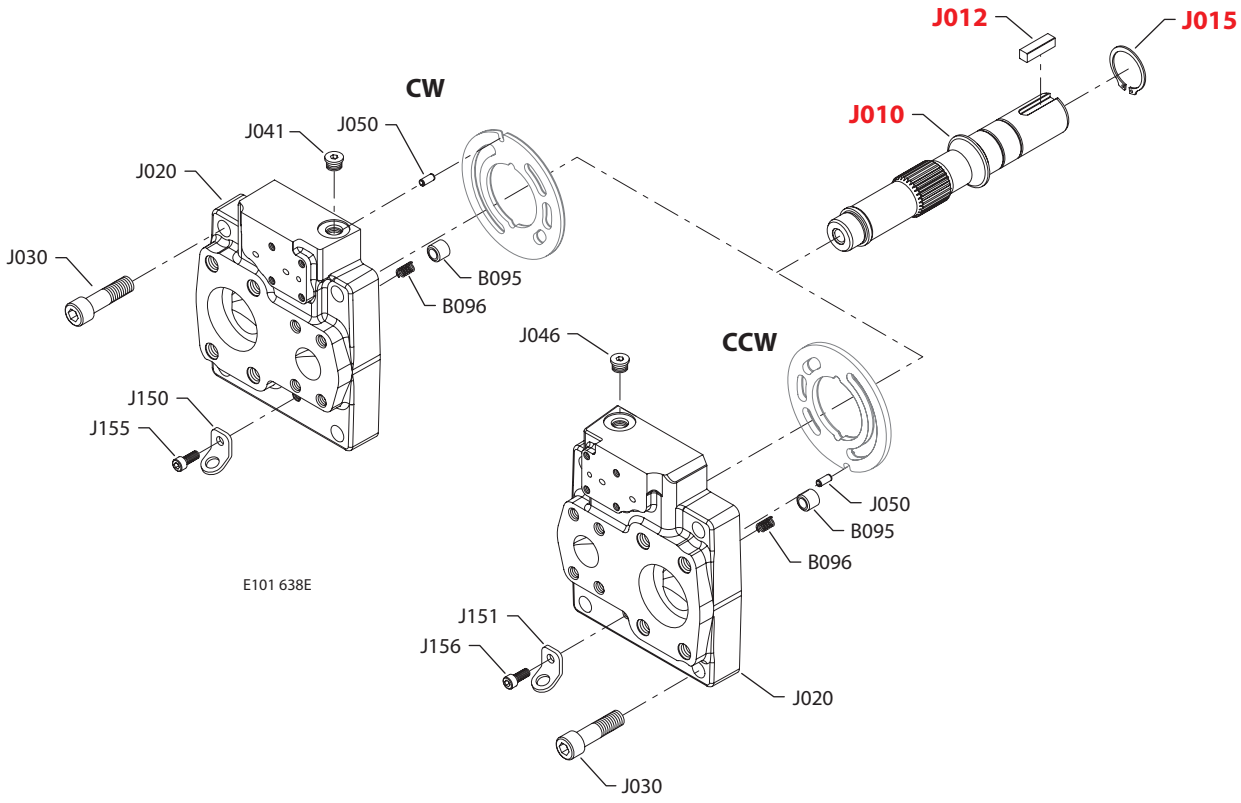

(K4N5)

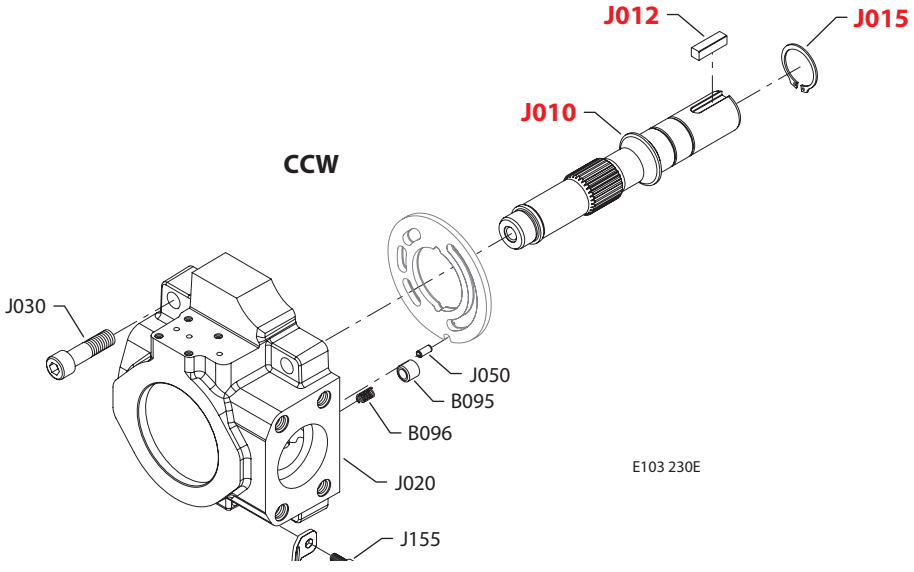

* = included in base motor seal kit Q210

Enlarged **bold** type item numbers are recommended part to stock for servicing.

Shaft, auxiliary flange and end cap

Shaft/auxiliary flange/end cap

Order code	Item	Date begin	Date end	Part number	Part name	Qty. per model/kit
K4N4	B095	03-23	15-38	1700256	Check valve poppet	1
	B096	03-23	15-38	1700257	Check valve spring	1
	J010	03-23	15-38	11086032	Shaft, straight key without auxiliary drive	1
	J012	03-23	15-38	5000364	Key	1
	J015	03-23	15-38	5000365	Retaining ring	1
	J020	03-23	15-38	11077589	End cap,CW, axial ports, gen. 1, JRR (SB-2010-002)	1
	J020	03-23	15-38	11077593	End cap, CCW, axial ports, gen. 1, JRL (SB-2010-002)	1
	J030	03-23	15-38	5000181 (9007314-1210)	Screw	4
	J041	03-23	15-38	140644 (9005110-5600)	Plug assembly, JRR	1
	J046	03-23	15-38	140644 (9005110-5600)	Plug assembly, JRL	1
	J050	03-23	15-38	9004700-1907	Pin	1
	J150	03-23	15-38	4800754	Lifting bracket, JRR	1
	J151	03-23	15-38	4800754	Lifting bracket, JRL	1
	J155	03-23	15-38	9007315-0604	Screw, JRR	1
	J156	03-23	15-38	9007315-0604	Screw, JRL	1
K4N5	B095	12-06	15-38	1700256	Check valve poppet	1
	B096	12-06	15-38	1700257	Check valve spring	1
	J010	12-06	15-38	11086032	Shaft, straight key without auxiliary drive	1
	J012	12-06	15-38	5000364	Key	1
	J015	12-06	15-38	5000365	Retaining ring	1
	J020	12-06	15-38	11077609	End cap, CCW, radial ports, gen. 1, JRL (SB-2010-002)	1
	J030	12-06	15-38	5000181 (9007314-1210)	Screw	4
	J050	12-06	15-38	9004700-1907	Pin	1
	J150	12-06	15-38	4800754	Lifting bracket	1
	J155	12-06	15-38	9007315-0604	Screw	1
K4N9	B095	11-38		1700256	Check valve poppet	1
	B096	11-38		1700257	Check valve spring	1
	J010	11-38		11086032	Shaft, straight key without auxiliary drive	1
	J012	11-38		5000364	Key	1
	J015	11-38		5000365	Retaining ring	1
	J020	11-38		11095294	End cap,CW, axial ports, gen. 2, JRR	1
	J020	11-38		11095297	End cap, CCW, axial ports, gen. 2, JRL	1
	J030	11-38		5000181 (9007314-1210)	Screw	4
	J041	11-38		140644 (9005110-5600)	Plug assembly, JRR	1
	J046	11-38		140644 (9005110-5600)	Plug assembly, JRL	1
	J050	11-38		9004700-1907	Pin	1
	J150	11-38		4800754	Lifting bracket, JRR	1
	J151	11-38		4800754	Lifting bracket, JRL	1
	J155	11-38		9007315-0604	Screw, JRR	1
	J156	11-38		9007315-0604	Screw, JRL	1

Shaft, auxiliary flange and end cap

(K4NE)

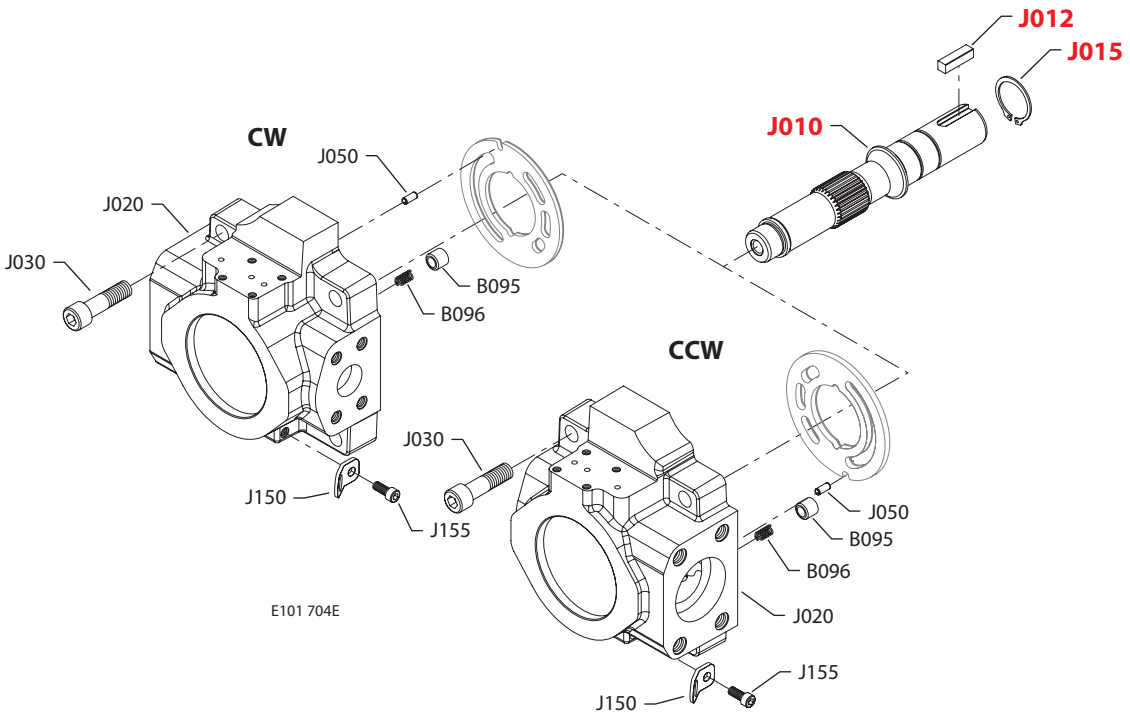

(K4NH)

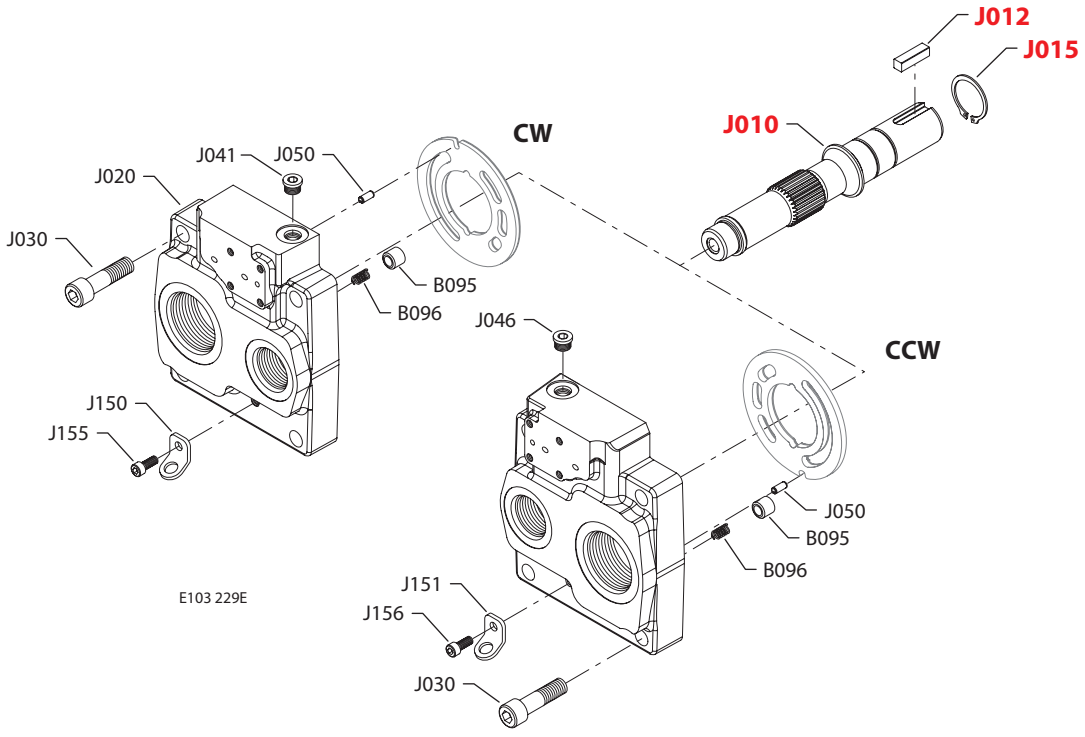

* = included in base motor seal kit Q210

Enlarged **bold** type item numbers are recommended part to stock for servicing.

Shaft, auxiliary flange and end cap

Shaft/auxiliary flange/end cap

Order code	Item	Date begin	Date end	Part number	Part name	Qty. per model/kit
K4NE	B095	03-23		1700256	Check valve poppet	1
	B096	03-23		1700257	Check valve spring	1
	J010	03-23		11086032	Shaft, straight key without auxiliary drive	1
	J012	03-23		5000364	Key	1
	J015	03-23		5000365	Retaining ring	1
	J020	03-23		11095323	End cap,CW, radial ports, gen. 2, JRR (SB-2010-002)	1
	J020	03-23		11082641	End cap, CCW, radial ports, Gen 2, JRL (SB-2010-002)	1
	J030	03-23		5000181 (9007314-1210)	Screw	4
	J050	03-23		9004700-1907	Pin	1
	J150	03-23		4800754	Lifting bracket	1
	J155	03-23		9007315-0604	Screw	1
K4NH	B095	12-06		1700256	Check valve poppet	1
	B096	12-06		1700257	Check valve spring	1
	J010	12-06		11086032	Shaft, straight key without auxiliary drive	1
	J012	12-06		5000364	Key	1
	J015	12-06		5000365	Retaining ring	1
	J020	12-06		11095295	End cap, CW, axial ports, gen. 2, JRR	1
	J020	12-06		11095298	End cap, CCW, axial ports, gen. 2, JRL	1
	J030	12-06		5000181 (9007314-1210)	Screw	4
	J041	12-06		140644 (9005110-5600)	Plug assembly, JRR	1
	J046	12-06		140644 (9005110-5600)	Plug assembly, JRL	1
	J050	12-06		9004700-1907	Pin	1
	J150	12-06		4800754	Lifting bracket, JRR	1
	J151	12-06		4800754	Lifting bracket, JRL	1
	J155	12-06		9007315-0604	Screw, JRR	1
	J156	12-06		9007315-0604	Screw, JRL	1

Shaft, auxiliary flange and end cap

(K4NV)

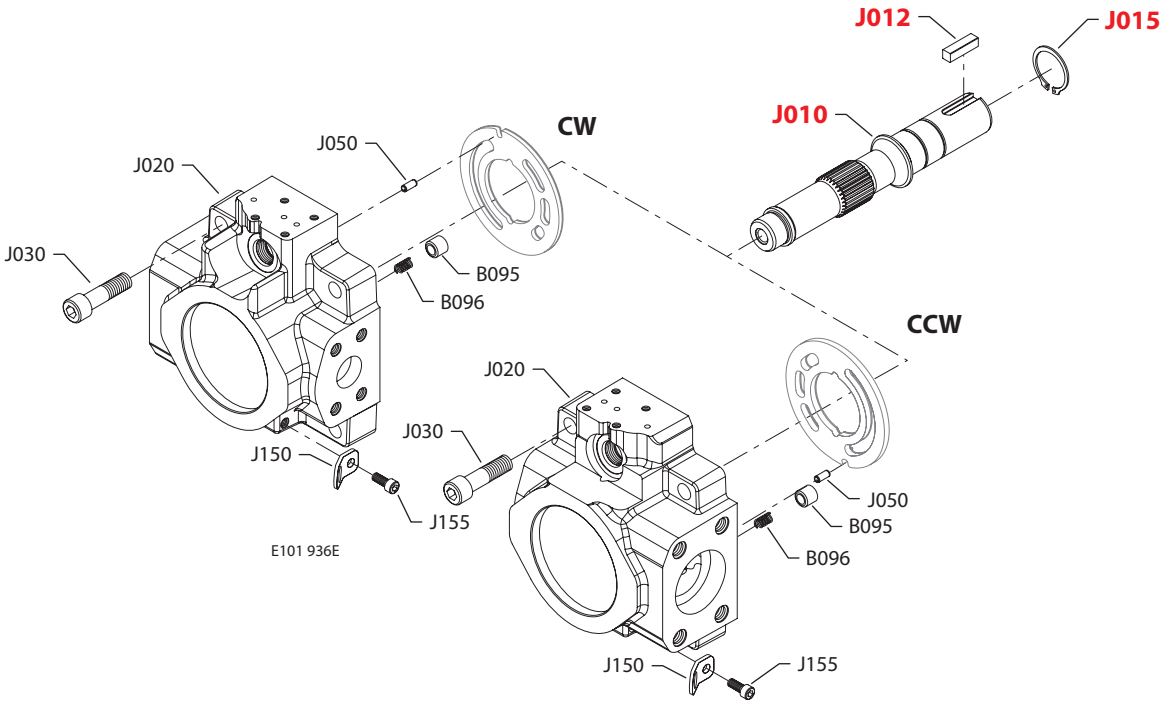

(K4NW)

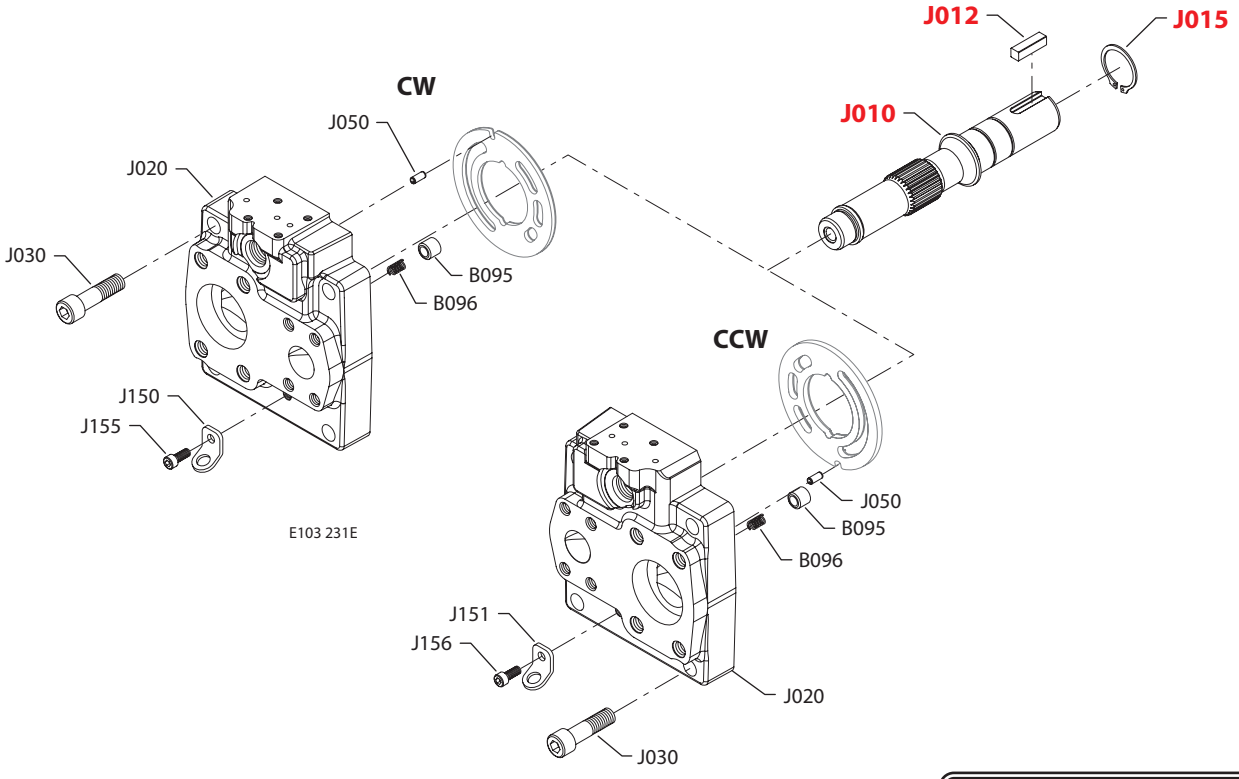

* = included in base motor seal kit Q210

Enlarged **bold** type item numbers are recommended part to stock for servicing.

Shaft, auxiliary flange and end cap

Shaft/auxiliary flange/end cap

Order code	Item	Date begin	Date end	Part number	Part name	Qty. per model/kit
K4NV	B095	11-39		1700256	Check valve poppet	1
	B096	11-39		1700257	Check valve spring	1
	J010	11-39		11086032	Shaft, straight key without auxiliary drive	1
	J012	11-39		5000364	Key	1
	J015	11-39		5000365	Retaining ring	1
	J020	11-39		11099615	End cap,CW, radial ports, DL, gen. 2, JRR	1
	J020	11-39		11095330	End cap, CCW, radial ports, DL, gen. 2, JRL	1
	J030	11-39		5000181 (9007314-1210)	Screw	4
	J050	11-39		9004700-1907	Pin	1
	J150	11-39		4800754	Lifting bracket	1
	J155	11-39		9007315-0604	Screw	1
K4NW	B095	12-06	15-36	1700256	Check valve poppet	1
	B096	12-06	15-36	1700257	Check valve spring	1
	J010	12-06	15-36	11086032	Shaft, straight key without auxiliary drive	1
	J012	12-06	15-36	5000364	Key	1
	J015	12-06	15-36	5000365	Retaining ring	1
	J020	12-06	15-36	11077591	End cap, CW, axial ports, DL, gen. 1, JRR (SB-2010-002)	1
	J020	12-06	15-36	11077595	End cap, CCW, axial ports, DL, gen. 1, JRL (SB-2010-002)	1
	J030	12-06	15-36	5000181 (9007314-1210)	Screw	4
	J050	12-06	15-36	9004700-1907	Pin	1
	J150	12-06	15-36	4800754	Lifting bracket, JRR	1
	J151	12-06	15-36	4800754	Lifting bracket, JRL	1
	J155	12-06	15-36	9007315-0604	Screw, JRR	1
	J156	12-06	15-36	9007315-0604	Screw, JRL	1

Shaft, auxiliary flange and end cap

(K4NX)

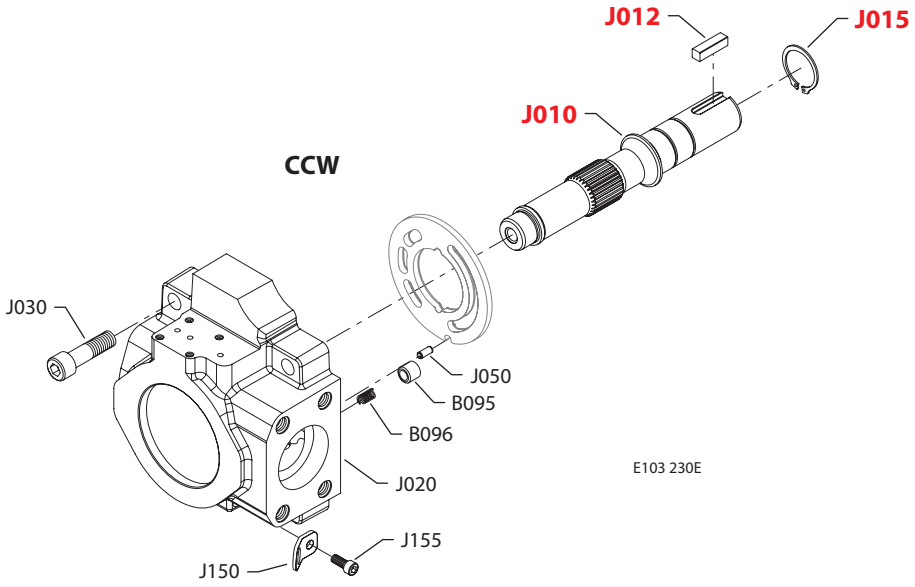

(K4NZ)

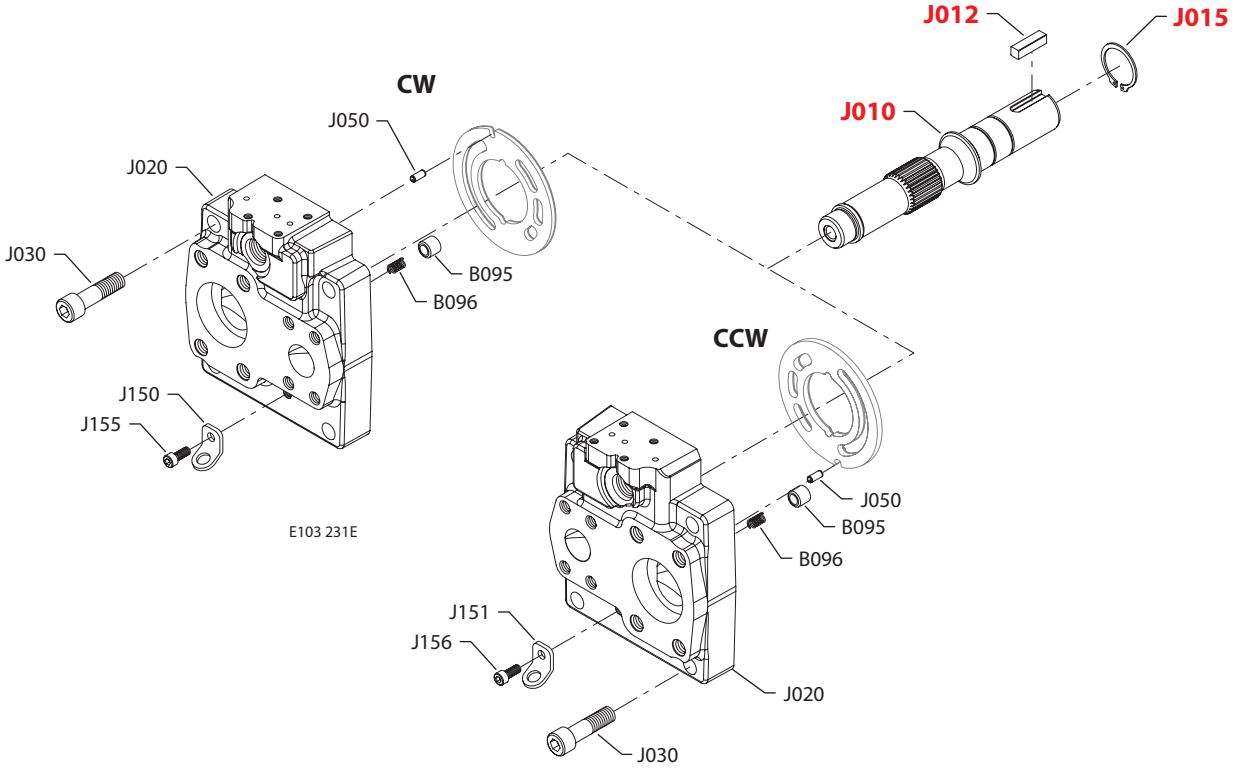

* = included in base motor seal kit Q210

Enlarged **bold** type item numbers are recommended part to stock for servicing.

Shaft, auxiliary flange and end cap

Shaft/auxiliary flange/end cap

Order code	Item	Date begin	Date end	Part number	Part name	Qty. per model/kit
K4NX	B095	12-06		1700256	Check valve poppet	1
	B096	12-06		1700257	Check valve spring	1
	J010	12-06		11086032	Shaft, straight key without auxiliary drive	1
	J012	12-06		5000364	Key	1
	J015	12-06		5000365	Retaining ring	1
	J020	12-06		11095331	End cap, CCW, radial ports, gen. 2, JRL	1
	J030	12-06		5000181 (9007314-1210)	Screw	4
	J050	12-06		9004700-1907	Pin	1
	J150	12-06		4800754	Lifting bracket	1
	J155	12-06		9007315-0604	Screw, JRR	1
K4NZ	B095	12-06		1700256	Check valve poppet	1
	B096	12-06		1700257	Check valve spring	1
	J010	12-06		11086032	Shaft, straight key without auxiliary drive	1
	J012	12-06		5000364	Key	1
	J015	12-06		5000365	Retaining ring	1
	J020	12-06		11095296	End cap, CW, axial ports, DL, gen. 2, JRR	1
	J020	12-06		11095299	End cap, CCW, axial ports, DL, gen. 2, JRL	1
	J030	12-06		5000181 (9007314-1210)	Screw	4
	J050	12-06		9004700-1907	Pin	1
	J150	12-06		4800754	Lifting bracket	1
	J151	12-06		4800754	Lifting bracket, JRL	1
	J155	12-06		9007315-0604	Screw, JRR	1
	J156	12-06		9007315-0604	Screw, JRL	1

Shaft, auxiliary flange and end cap

(K4R2 & K4RE)

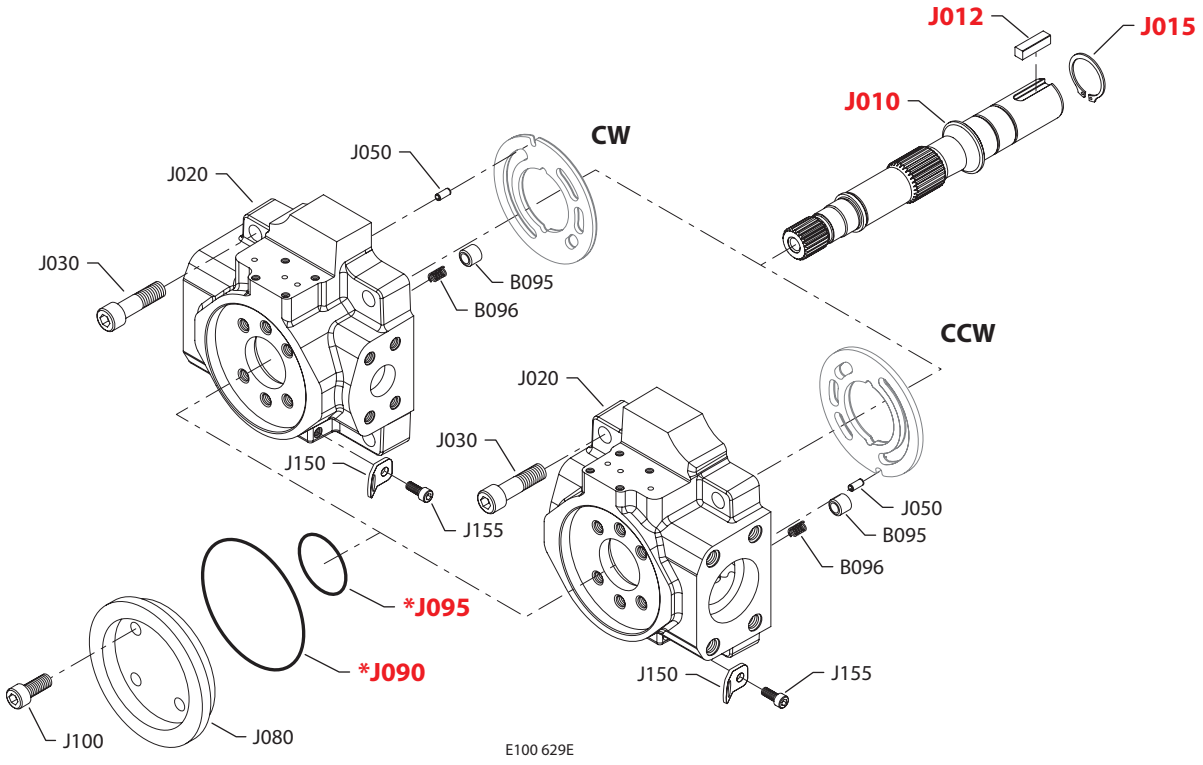

* = included in base motor seal kit Q210

Enlarged **bold** type item numbers are recommended part to stock for servicing.

Shaft, auxiliary flange and end cap

Shaft/auxiliary flange/end cap

Order code	Item	Date begin	Date end	Part number	Part name	Qty. per model/kit
K4R2	B095	03-23	15-39	1700256	Check valve poppet	1
	B096	03-23	15-39	1700257	Check valve spring	1
	J010	03-23	15-39	11085899	Shaft, straight key with auxiliary drive	1
	J012	03-23	15-39	5000364	Key	1
	J015	03-23	15-39	5000365	Retaining ring	1
	J020	03-23	15-39	11077600	End cap, CW, radial ports, gen. 1, JRR (SB-2010-002)	1
	J020	03-23	15-39	11077606	End cap, CCW, radial ports, gen. 1, JRL (SB-2010-002)	1
	J030	03-23	15-39	5000181 (9007314-1210)	Screw	4
	J050	03-23	15-39	9004700-1907	Pin	1
	J080	03-23	15-39	4570179	Running cover	1
	J090	03-23	15-39	5000099 (9004100-1550)	O-ring	1
	J095	03-23	15-39	545434 (9004104-0310)	O-ring	1
	J100	03-23	15-39	5000489	Screw	4
	J150	03-23	15-39	4800754	Lifting bracket	1
	J155	03-23	15-39	9007315-0604	Screw	1
K4RE	B095	11-45		1700256	Check valve poppet	1
	B096	11-45		1700257	Check valve spring	1
	J010	11-45		11085899	Shaft, straight key with auxiliary drive	1
	J012	11-45		5000364	Key	1
	J015	11-45		5000365	Retaining ring	1
	J020	11-45		11092368	End cap, CW, radial ports, gen. 2, JRR	1
	J020	11-45		11086934	End cap, CCW, radial ports, gen. 2, JRL	1
	J030	11-45		5000181 (9007314-1210)	Screw	4
	J050	11-45		9004700-1907	Pin	1
	J080	11-45		4570179	Running cover	1
	J090	11-45		5000099 (9004100-1550)	O-ring	1
	J095	11-45		545434 (9004104-0310)	O-ring	1
	J100	11-45		5000489	Screw	4
	J150	11-45		4800754	Lifting bracket	1
	J155	11-45		9007315-0604	Screw	1

Shaft, auxiliary flange and end cap

(K4RF & K4RV)

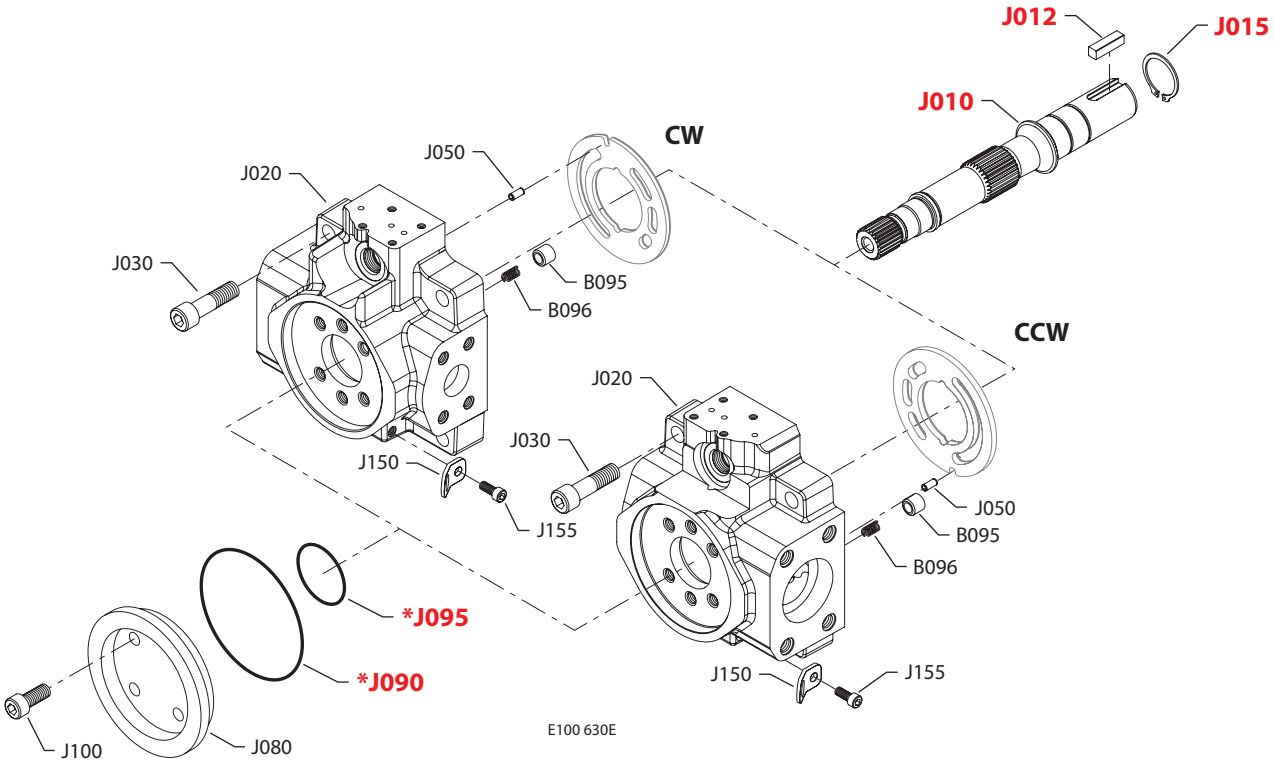

* = included in base motor seal kit Q210

Enlarged **bold** type item numbers are recommended part to stock for servicing.

Shaft, auxiliary flange and end cap

Shaft/auxiliary flange/end cap

Order code	Item	Date begin	Date end	Part number	Part name	Qty. per model/kit
K4RF	B095	11-47		1700256	Check valve poppet	1
	B096	11-47		1700257	Check valve spring	1
	J010	11-47		11085899	Shaft, straight key with auxiliary drive	1
	J012	11-47		5000364	Key	1
	J015	11-47		5000365	Retaining ring	1
	J020	11-47		11095327	End cap, C\W, radial ports, DL, gen. 2, JRL	1
	J020	11-47		11086919	End cap, CCW, radial ports, DL, gen. 2, JRL	1
	J030	11-47		5000181 (9007314-1210)	Screw	4
	J050	11-47		9004700-1907	Pin	1
	J080	11-47		4570179	Running cover	1
	J090	11-47		5000099 (9004100-1550)	O-ring	1
	J095	11-47		545434 (9004104-0310)	O-ring	1
	J100	11-47		5000489	Screw	4
	J150	11-47		4800754	Lifting bracket	1
	J155	11-47		9007315-0604	Screw	1
K4RV	B095	03-23	15-37	1700256	Check valve poppet	1
	B096	03-23	15-37	1700257	Check valve spring	1
	J010	03-23	15-37	11085899	Shaft, straight key with auxiliary drive	1
	J012	03-23	15-37	5000364	Key	1
	J015	03-23	15-37	5000365	Retaining ring	1
	J020	03-23	15-37	11077604	End cap, CW, radial ports, DL, gen. 1, JRR (SB-2010-002)	1
	J020	03-23	15-37	11077608	End cap, CCW, radial ports, DL, gen. 1, JRL (SB-2010-002)	1
	J030	03-23	15-37	5000181 (9007314-1210)	Screw	4
	J050	03-23	15-37	9004700-1907	Pin	1
	J080	03-23	15-37	4570179	Running cover	1
	J090	03-23	15-37	5000099 (9004100-1550)	O-ring	1
	J095	03-23	15-37	545434 (9004104-0310)	O-ring	1
	J100	03-23	15-37	5000489	Screw	4
	J150	03-23	15-37	4800754	Lifting bracket	1
	J155	03-23	15-37	9007315-0604	Screw	1

Shaft, auxiliary flange and end cap

(K4T2 & K4TE)

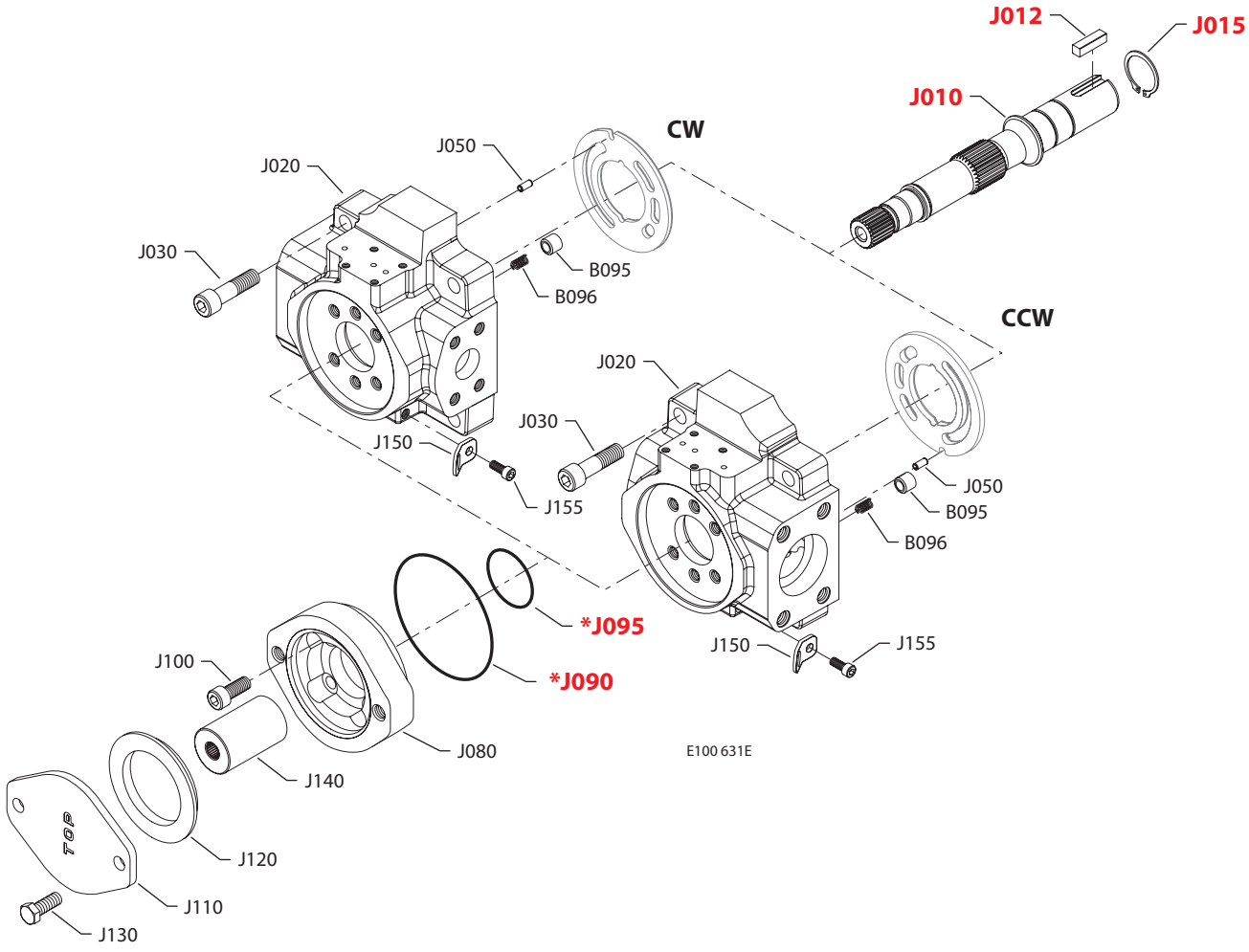

* = included in base motor seal kit Q210

Enlarged **bold** type item numbers are recommended part to stock for servicing.

Shaft, auxiliary flange and end cap

Shaft/auxiliary flange/end cap

Order code	Item	Date begin	Date end	Part number	Part name	Qty. per model/kit
K4T2	B095	03-23	15-39	1700256	Check valve poppet	1
	B096	03-23	15-39	1700257	Check valve spring	1
	J010	03-23	15-39	11085899	Shaft, straight key with auxiliary drive	1
	J012	03-23	15-39	5000364	Key	1
	J015	03-23	15-39	5000365	Retaining ring	1
	J020	03-23	15-39	11077600	End cap, CW, radial ports, gen. 1, JRR (SB-2010-002)	1
	J030	03-23	15-39	5000181 (9007314-1210)	Screw	4
	J050	03-23	15-39	9004700-1907	Pin	1
	J080	03-23	15-39	4570289	Flange adapter, A pad	1
	J090	03-23	15-39	5000099 (9004100-1550)	O-ring	1
	J095	03-23	15-39	545434 (9004100-0420)	O-ring	1
	J100	03-23	15-39	5000489	Screw	4
	J110	03-23	15-39	4460586	Cover plate	1
	J120	03-23	15-39	4800482	A pad seal	1
	J130	03-23	15-39	9007200-3712	Screw	2
	J140	03-23	15-39	1701186	Coupling, 11 tooth	1
	J150	03-23	15-39	4800754	Lifting bracket	1
	J155	03-23	15-39	9007315-0604	Screw	1
K4TE	B095	11-45		1700256	Check valve poppet	1
	B096	11-45		1700257	Check valve spring	1
	J010	11-45		11085899	Shaft, straight key with auxiliary drive	1
	J012	11-45		5000364	Key	1
	J015	11-45		5000365	Retaining ring	1
	J020	11-45		11092368	End cap, CW, radial ports, gen. 2, JRR	1
	J020	11-45		11086934	End cap, CCW, radial ports, Gen 2, JRL	1
	J030	11-45		5000181 (9007314-1210)	Screw	4
	J050	11-45		9004700-1907	Pin	1
	J080	11-45		4570289	Flange adapter, A pad	1
	J090	11-45		5000099 (9004100-1550)	O-ring	1
	J095	11-45		545434 (9004100-0420)	O-ring	1
	J100	11-45		5000489	Screw	4
	J110	11-45		4460586	Cover plate	1
	J120	11-45		4800482	A pad seal	1
	J130	11-45		9007200-3712	Screw	2
	J140	11-45		1701186	Coupling, 11 tooth	1
	J150	11-45		4800754	Lifting bracket	1
	J155	11-45		9007315-0604	Screw	1

Shaft, auxiliary flange and end cap

(K4V2 & K4VE)

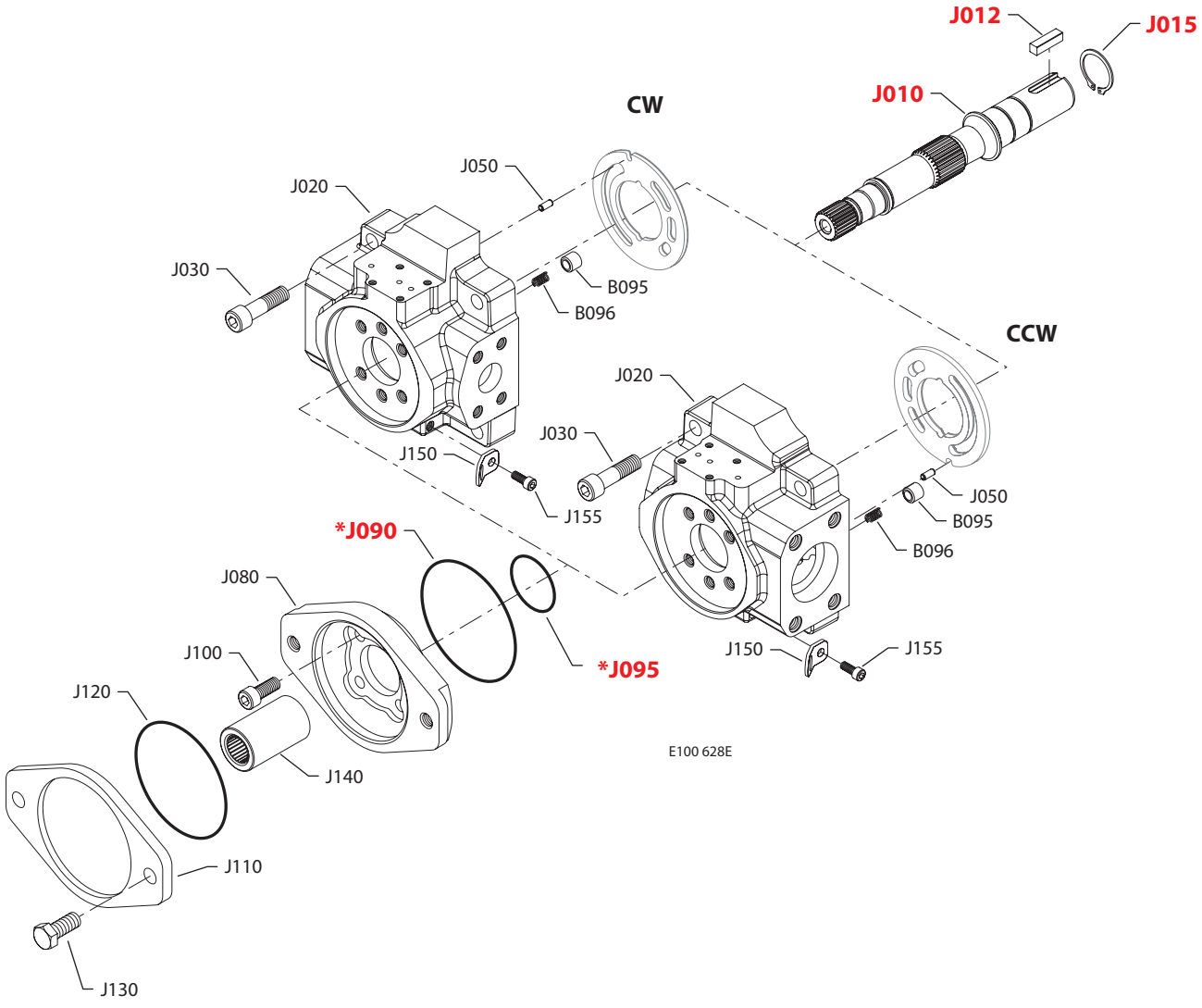

* = included in base motor seal kit Q210

Enlarged **bold** type item numbers are recommended part to stock for servicing.

Shaft, auxiliary flange and end cap

Shaft/auxiliary flange/end cap

Order code	Item	Date begin	Date end	Part number	Part name	Qty. per model/kit
K4V2	B095	03-23	15-39	1700256	Check valve poppet	1
	B096	03-23	15-39	1700257	Check valve spring	1
	J010	03-23	15-39	11085899	Shaft, straight key with auxiliary drive	1
	J012	03-23	15-39	5000364	Key	1
	J015	03-23	15-39	5000365	Retaining ring	1
	J020	03-23	15-39	11077600	End cap, CW, radial ports, gen. 1, JRR (SB-2010-002)	1
	J030	03-23	15-39	5000181 (9007314-1210)	Screw	4
	J050	03-23	15-39	9004700-1907	Pin	1
	J080	03-23	15-39	4570210	Flange adapter, B pad	1
	J090	03-23	15-39	5000099 (9004100-1550)	O-ring	1
	J095	03-23	15-39	545434 (9004100-0420)	O-ring	1
	J100	03-23	15-39	5000489	Screw	4
	J110	03-23	15-39	4460370	Cover plate	1
	J120	03-23	15-39	9004104-0440	O-ring	1
	J130	03-23	15-39	9007200-5021	Screw	2
	J140	03-23	15-39	1701188	Coupling, 15 tooth	1
	J150	03-23	15-39	4800754	Lifting bracket	1
	J155	03-23	15-39	9007315-0604	Screw	1
K4VE	B095	11-45		1700256	Check valve poppet	1
	B096	11-45		1700257	Check valve spring	1
	J010	11-45		11085899	Shaft, straight key with auxiliary drive	1
	J012	11-45		5000364	Key	1
	J015	11-45		5000365	Retaining ring	1
	J020	11-45		11092368	End cap, CW, radial ports, gen. 2, JRR	1
	J020	11-45		11086934	End cap, CCW, radial ports, gen. 2, JRL	1
	J030	11-45		5000181 (9007314-1210)	Screw	4
	J050	11-45		9004700-1907	Pin	1
	J080	11-45		4570210	Flange adapter, B pad	1
	J090	11-45		5000099 (9004100-1550)	O-ring	1
	J095	11-45		545434 (9004100-0420)	O-ring	1
	J100	11-45		5000489	Screw	4
	J110	11-45		4460370	Cover plate	1
	J120	11-45		9004104-0440	O-ring	1
	J130	11-45		9007200-5021	Screw	2
	J140	11-45		1701188	Coupling, 15 tooth	1
	J150	11-45		4800754	Lifting bracket	1
	J155	11-45		9007315-0604	Screw	1

Shaft, auxiliary flange and end cap

(S1A2)

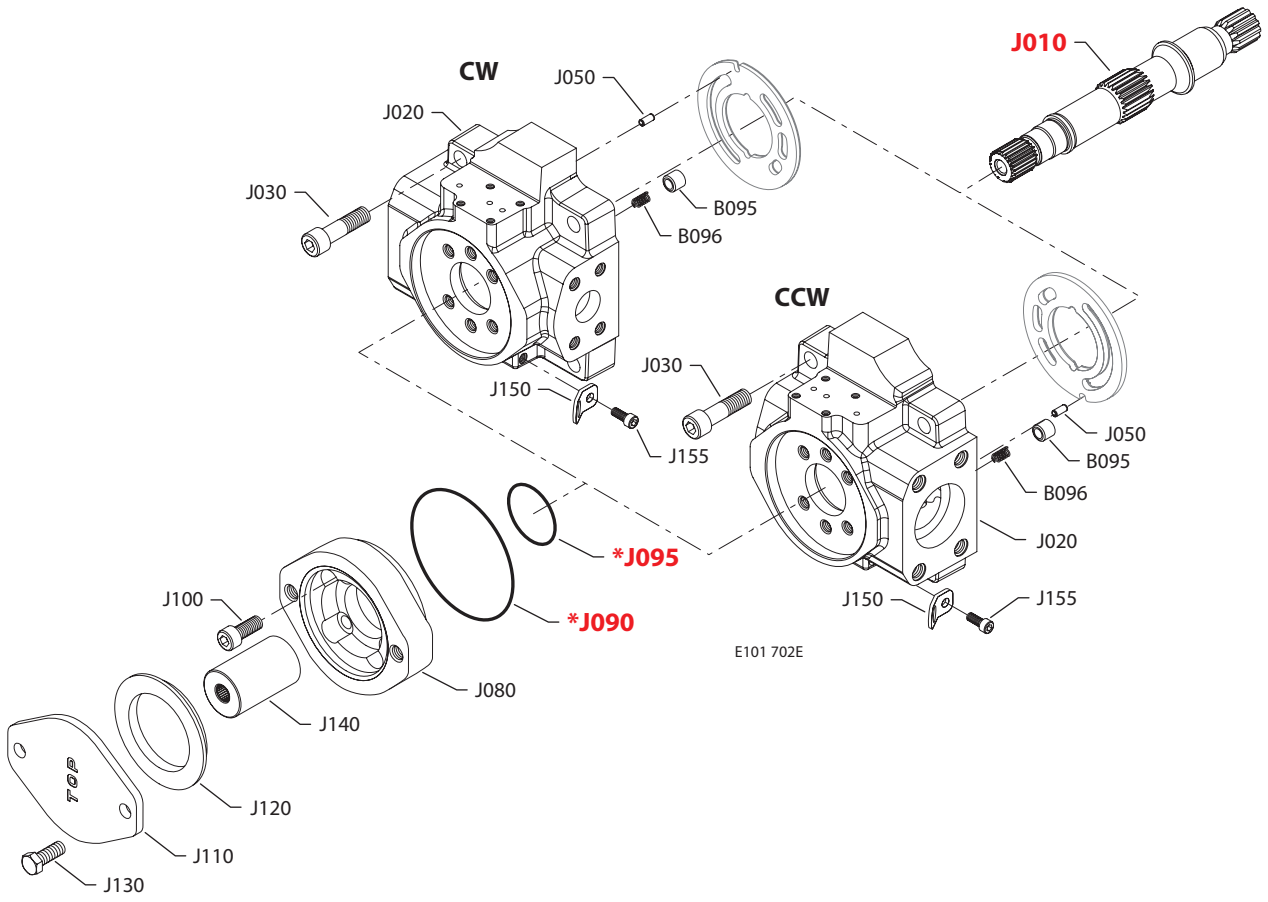

(S1A9 & S1AA)

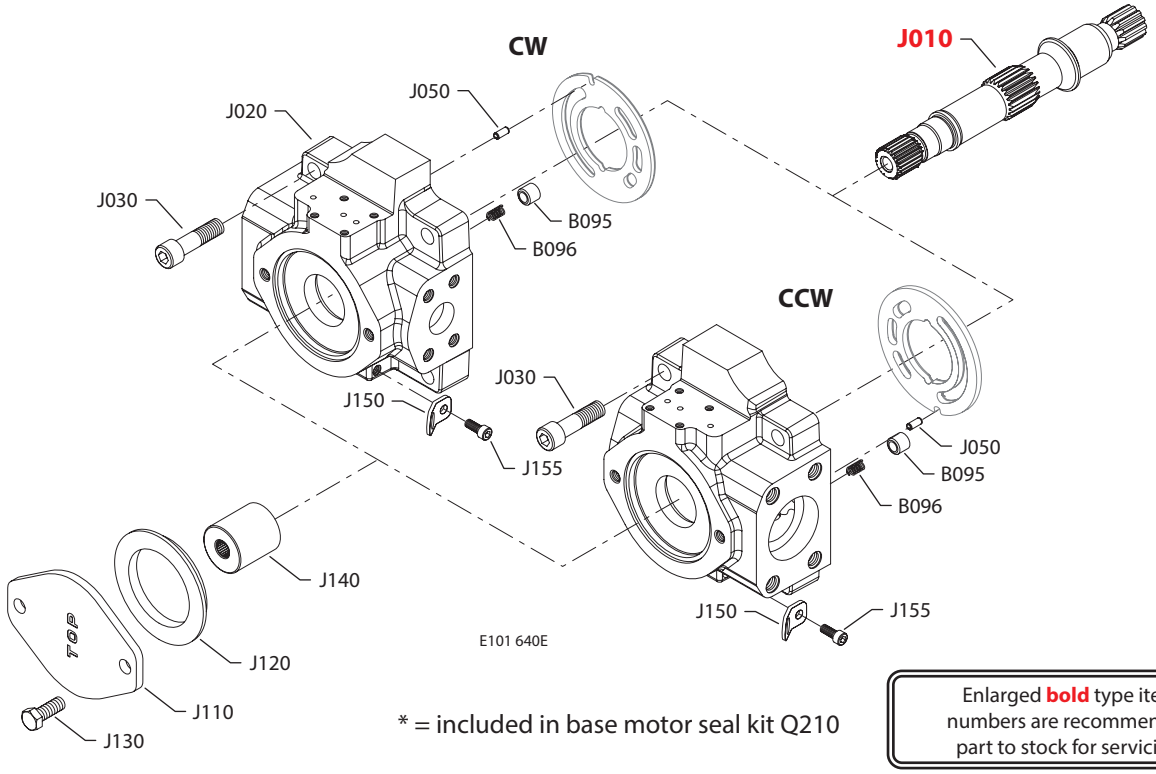

* = included in base motor seal kit Q210

Enlarged **bold** type item numbers are recommended part to stock for servicing.

Shaft, auxiliary flange and end cap

Shaft/auxiliary flange/end cap

Order code	Item	Date begin	Date end	Part number	Part name	Qty. per model/kit
S1A2	B095	03-23	15-39	1700256	Check valve poppet	1
	B096	03-23	15-39	1700257	Check valve spring	1
	J010	03-23	15-39	1700955	Shaft, 14 tooth with auxiliary drive	1
	J020	03-23	15-39	11077600	End cap, CW, radial ports, Gen 1, JRR (SB-2010-002)	1
	J020	03-23	15-39	11077606	End cap, CCW, radial ports, Gen 1, JRL (SB-2010-002)	1
	J030	03-23	15-39	5000181 (9007314-1210)	Screw	4
	J050	03-23	15-39	9004700-1907	Pin	1
	J080	03-23	15-39	4570289	Flange adapter, A pad	1
	J090	03-23	15-39	5000099 (9004100-1550)	O-ring	1
	J095	03-23	15-39	545434 (9004100-0420)	O-ring	1
	J100	03-23	15-39	5000489	Screw	4
	J110	03-23	15-39	4460586	Cover plate	1
	J120	03-23	15-39	4800482	A pad seal	1
	J130	03-23	15-39	9007200-3712	Screw	2
	J140	03-23	15-39	1701185	Coupling, 9 tooth	1
	J150	03-23	15-39	4800754	Lifting bracket	1
	J155	03-23	15-39	9007315-0604	Screw	1
S1A9	B095	03-23		1700256	Check valve poppet	1
	B096	03-23		1700257	Check valve spring	1
	J010	03-23		1700955	Shaft, 14 tooth with auxiliary drive	1
	J020	03-23		11085473	End cap, CW, radial ports, Gen 2, JRR (SB-2010-002)	1
	J030	03-23		5000181 (9007314-1210)	Screw	4
	J050	03-23		9004700-1907	Pin	1
	J110	03-23		4460586	Cover plate	1
	J120	03-23		4800482	A pad seal	1
	J130	03-23		5000622	Screw	2
	J140	03-23		4570356	Coupling, 9 tooth, short	1
	J150	03-23		4800754	Lifting bracket	1
	J155	03-23		9007315-0604	Screw	1
S1AA	B095	03-23	15-38	1700256	Check valve poppet	1
	B096	03-23	15-38	1700257	Check valve spring	1
	J010	03-23	15-38	1700955	Shaft, 14 tooth with auxiliary drive	1
	J020	03-23	15-38	11077601	End cap, CW, radial ports, Gen 1, JRR (SB-2010-002)	1
	J020	03-23	15-38	11077607	End cap, CCW, radial ports, Gen 1, JRL (SB-2010-002)	1
	J030	03-23	15-38	5000181 (9007314-1210)	Screw	4
	J050	03-23	15-38	9004700-1907	Pin	1
	J110	03-23	15-38	4460586	Cover plate	1
	J120	03-23	15-38	4800482	A pad seal	1
	J130	03-23	15-38	9007200-3712	Screw	2
	J140	03-23	15-38	4570356	Coupling, 9 tooth, short	1
	J150	03-23	15-38	4800754	Lifting bracket	1
	J155	03-23	15-38	9007315-0604	Screw	1

Shaft, auxiliary flange and end cap

(S1AE)

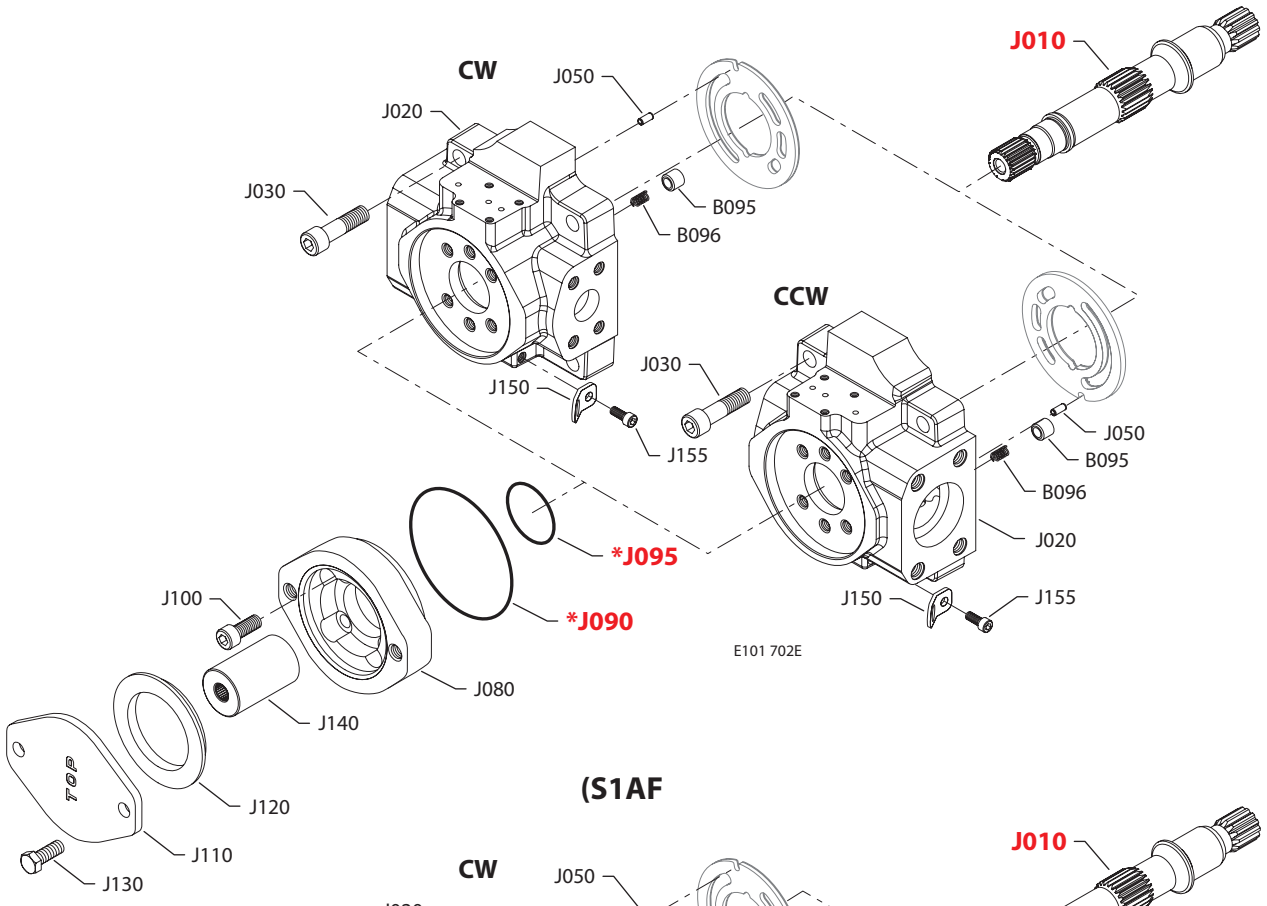

(S1AF

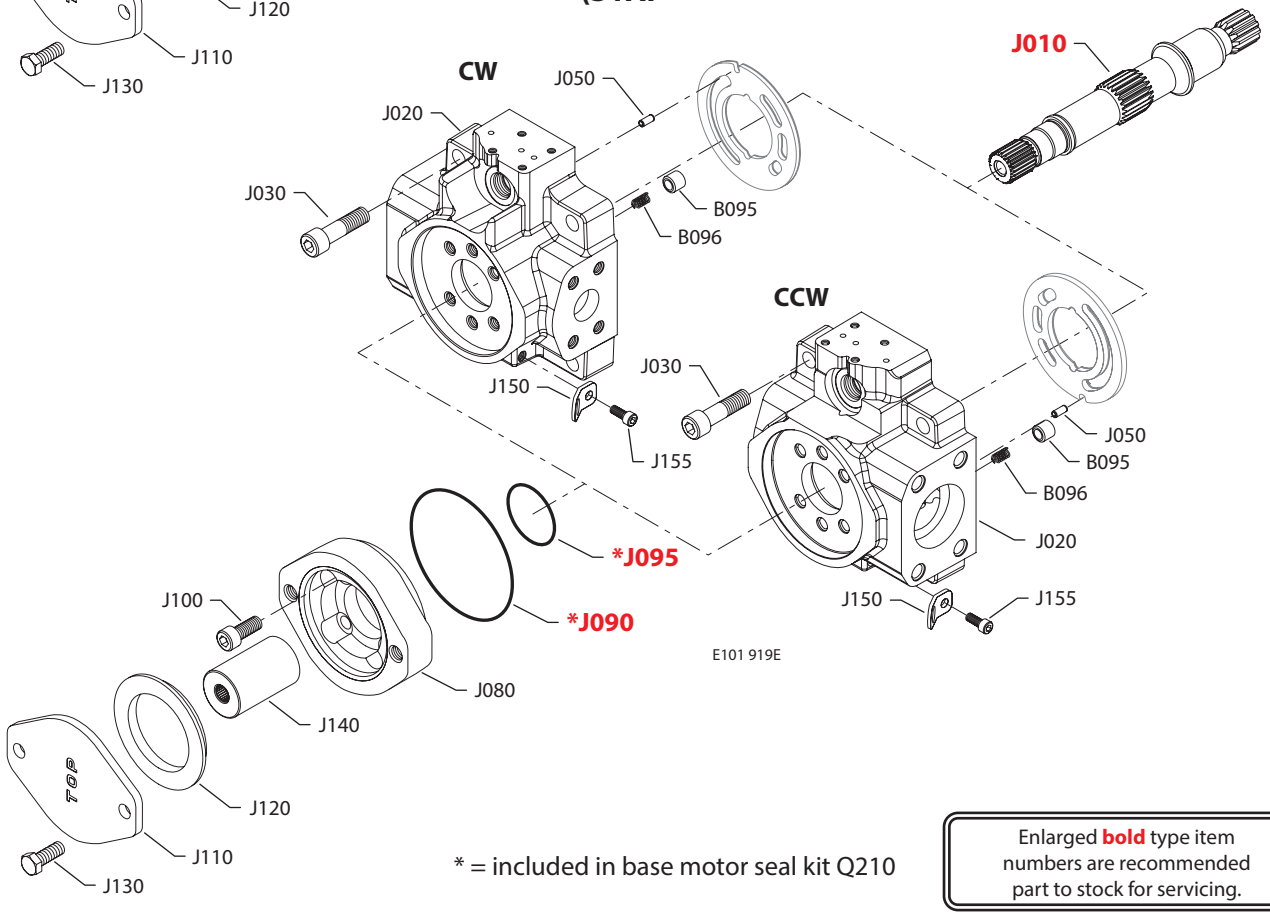

* = included in base motor seal kit Q210

Enlarged **bold** type item numbers are recommended part to stock for servicing.

Shaft, auxiliary flange and end cap

Shaft/auxiliary flange/end cap

Order code	Item	Date begin	Date end	Part number	Part name	Qty. per model/kit
S1AE	B095	11-45		1700256	Check valve poppet	1
	B096	11-45		1700257	Check valve spring	1
	J010	11-45		1700955	Shaft, 14 tooth with auxiliary drive	1
	J020	11-45		11092368	End cap, CW, radial ports, Gen 2, JRR	1
	J020	11-45		11086934	End cap, CCW, radial ports, Gen 2, JRL	1
	J030	11-45		5000181 (9007314-1210)	Screw	4
	J050	11-45		9004700-1907	Pin	1
	J080	11-45		4570289	Flange adapter, A pad	1
	J090	11-45		5000099 (9004100-1550)	O-ring	1
	J095	11-45		545434 (9004100-0420)	O-ring	1
	J100	11-45		5000489	Screw	4
	J110	11-45		4460586	Cover plate	1
	J120	11-45		4800482	A pad seal	1
	J130	11-45		9007200-3712	Screw	2
	J140	11-45		1701185	Coupling, 9 tooth	1
	J150	11-45		4800754	Lifting bracket	1
	J155	11-45		9007315-0604	Screw	1
S1AF	B095	11-47		1700256	Check valve poppet	1
	B096	11-47		1700257	Check valve spring	1
	J010	11-47		1700955	Shaft, 14 tooth with auxiliary drive	1
	J020	11-47		11095327	End cap, CW, radial ports, DL, Gen 2, JRR	1
	J020	11-47		11086919	End cap, CCW, radial ports, DL, Gen 2, JRL	1
	J030	11-47		5000181 (9007314-1210)	Screw	4
	J050	11-47		9004700-1907	Pin	1
	J080	11-47		4570289	Flange adapter, A pad	1
	J090	11-47		5000099 (9004100-1550)	O-ring	1
	J095	11-47		545434 (9004100-0420)	O-ring	1
	J100	11-47		5000489	Screw	4
	J110	11-47		4460586	Cover plate	1
	J120	11-47		4800482	A pad seal	1
	J130	11-47		9007200-3712	Screw	2
	J140	11-47		1701185	Coupling, 9 tooth	1
	J150	11-47		4800754	Lifting bracket	1
	J155	11-47		9007315-0604	Screw	1

Shaft, auxiliary flange and end cap

(S1AV)

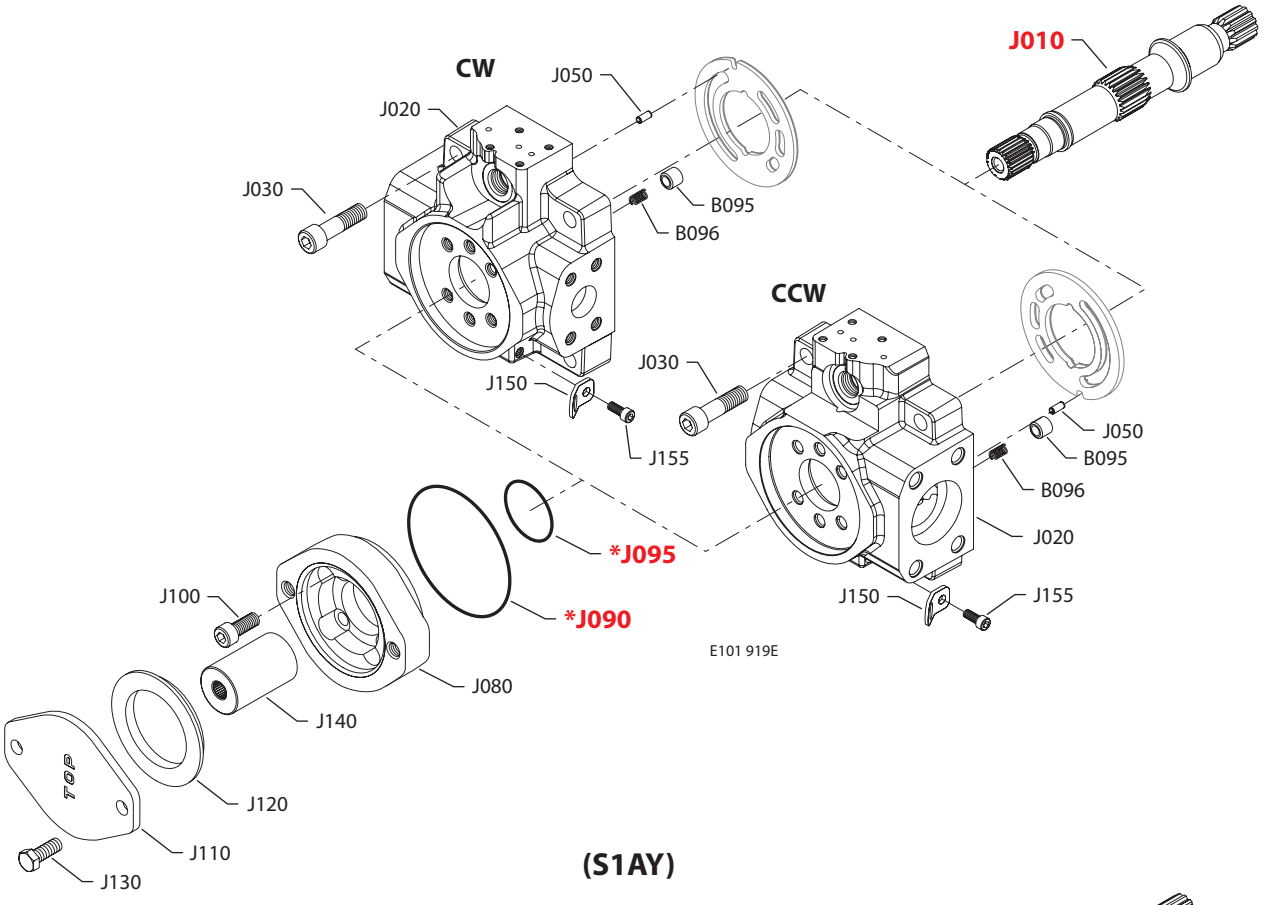

(S1AY)

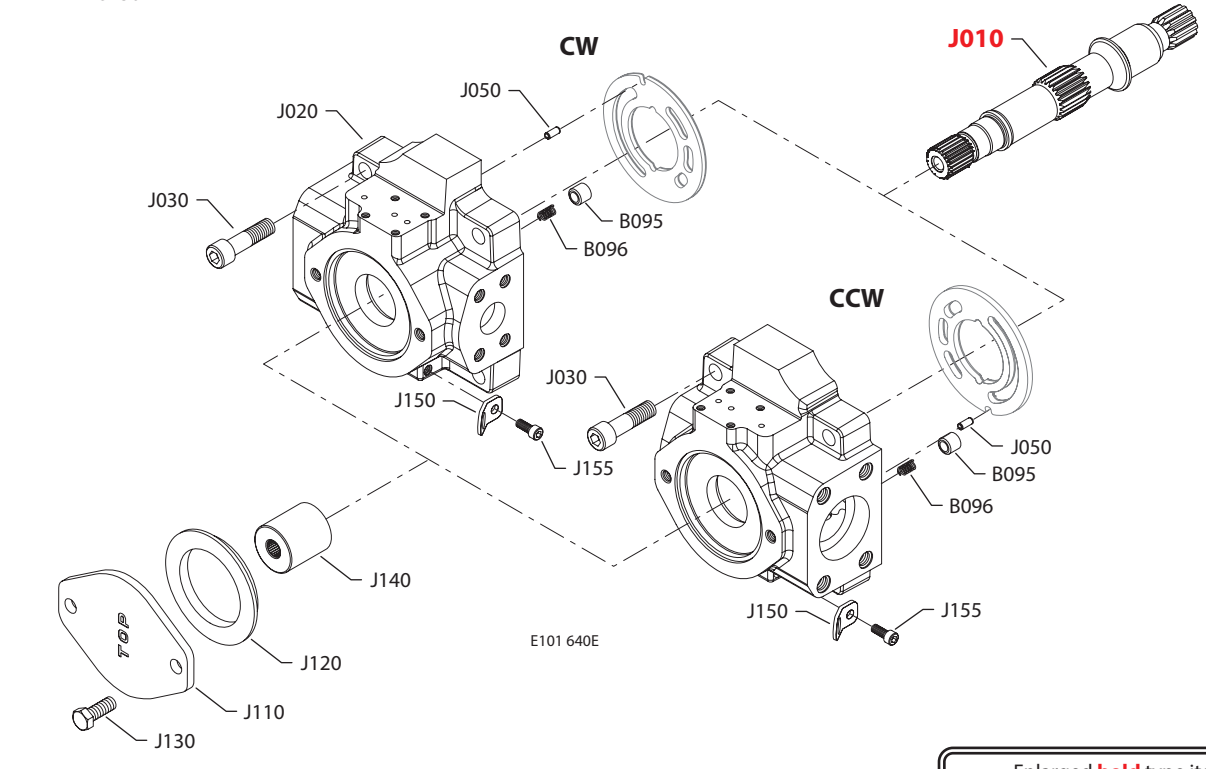

* = included in base motor seal kit Q210

Enlarged **bold** type item numbers are recommended part to stock for servicing.

Shaft, auxiliary flange and end cap

Shaft/auxiliary flange/end cap

Order code	Item	Date begin	Date end	Part number	Part name	Qty. per model/kit
S1AV	B095	03-23	15-37	1700256	Check valve poppet	1
	B096	03-23	15-37	1700257	Check valve spring	1
	J010	03-23	15-37	1700955	Shaft, 14 tooth with auxiliary drive	1
	J020	03-23	15-37	11077604	End cap, CW, radial ports, DL, gen. 1, JRR (SB-2010-002)	1
	J020	03-23	15-37	11077608	End cap, CCW, radial ports, DL, gen. 1, JRL (SB-2010-002)	1
	J030	03-23	15-37	5000181 (9007314-1210)	Screw	4
	J050	03-23	15-37	9004700-1907	Pin	1
	J080	03-23	15-37	4570289	Flange adapter, A pad	1
	J090	03-23	15-37	5000099 (9004100-1550)	O-ring	1
	J095	03-23	15-37	545434 (9004100-0420)	O-ring	1
	J100	03-23	15-37	5000489	Screw	4
	J110	03-23	15-37	4460586	Cover plate	1
	J120	03-23	15-37	4800482	A pad seal	1
	J130	03-23	15-37	9007200-3712	Screw	2
	J140	03-23	15-37	1701185	Coupling, 9 tooth	1
	J150	03-23	15-37	4800754	Lifting bracket	1
	J155	03-23	15-37	9007315-0604	Screw	1
S1AY	B095	12-05		1700256	Check valve poppet	1
	B096	12-05		1700257	Check valve spring	1
	J010	12-05		1700955	Shaft, 14 tooth with auxiliary drive	1
	J020	12-05		11091564	End cap, CW, radial ports, gen. 2, JRR	1
	J020	12-05		11095329	End cap, CCW, radial ports, gen. 2, JRL	1
	J030	12-05		5000181 (9007314-1210)	Screw	4
	J050	12-05		9004700-1907	Pin	1
	J110	12-05		4460586	Cover plate	1
	J120	12-05		4800482	A pad seal	1
	J130	12-05		9007200-3712	Screw	2
	J140	12-05		4570356	Coupling, 9 tooth, short	1
	J150	12-05		4800754	Lifting bracket	1
	J155	12-05		9007315-0604	Screw	1

Shaft, auxiliary flange and end cap

(S1B2 & S1B5)

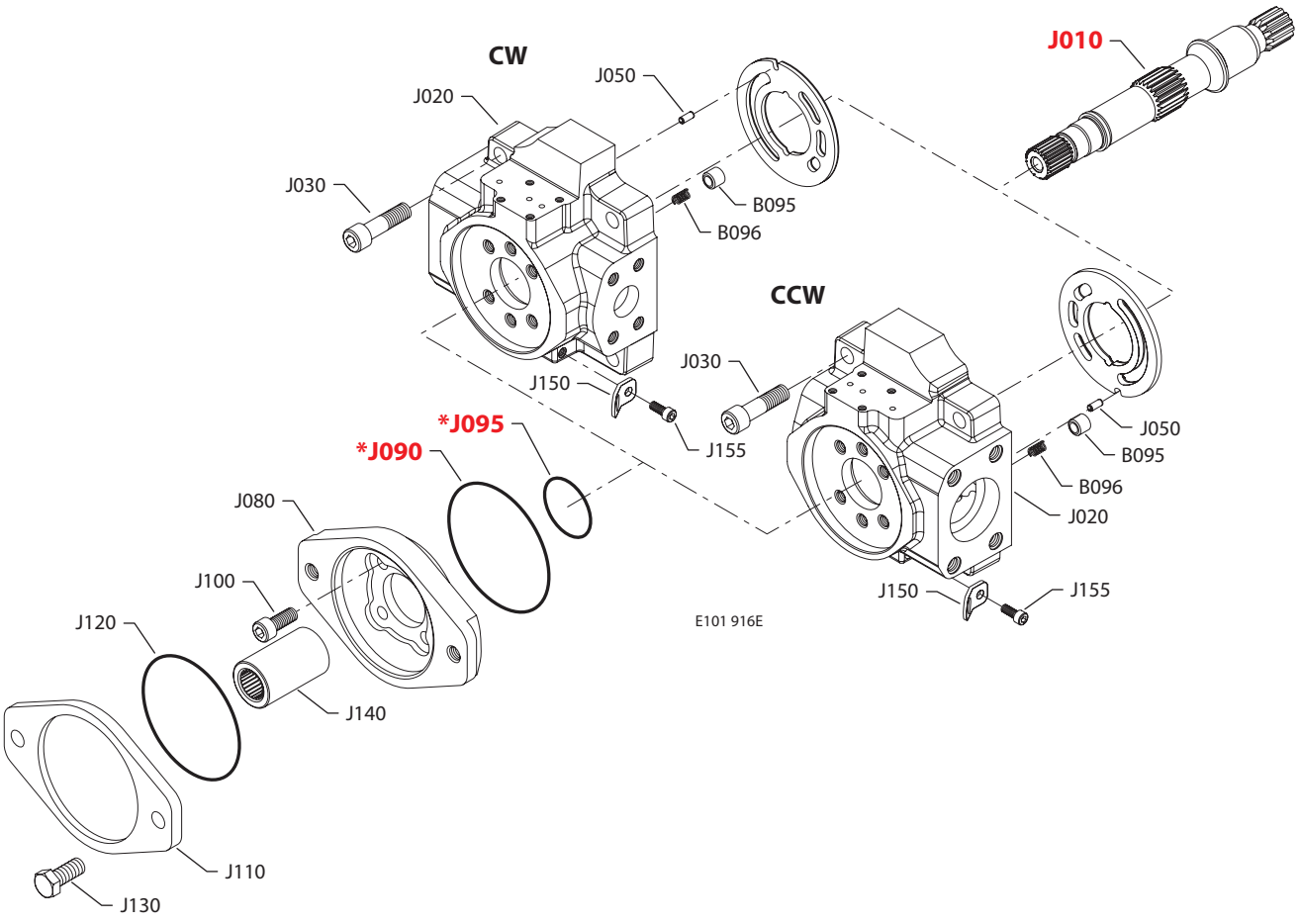

* = included in base motor seal kit Q210

Enlarged **bold** type item numbers are recommended part to stock for servicing.

Shaft, auxiliary flange and end cap

Shaft/auxiliary flange/end cap

Order code	Item	Date begin	Date end	Part number	Part name	Qty. per model/kit
S1B2	B095	03-23	15-39	1700256	Check valve poppet	1
	B096	03-23	15-39	1700257	Check valve spring	1
	J010	03-23	15-39	1700955	Shaft, 14 tooth with auxiliary drive	1
	J020	03-23	15-39	11077600	End cap, CW, radial ports, gen. 1, JRR (SB-2010-002)	1
	J020	03-23	15-39	11077606	End cap, CCW, radial ports, gen. 1, JRL (SB-2010-002)	1
	J030	03-23	15-39	5000181 (9007314-1210)	Screw	4
	J050	03-23	15-39	9004700-1907	Pin	1
	J080	03-23	15-39	4570210	Flange adapter, B pad	1
	J090	03-23	15-39	5000099 (9004100-1550)	O-ring	1
	J095	03-23	15-39	545434 (9004100-0420)	O-ring	1
	J100	03-23	15-39	5000489	Screw	4
	J110	03-23	15-39	4460370	Cover plate	1
	J120	03-23	15-39	9004104-0440	O-ring	1
	J130	03-23	15-39	9007200-5021	Screw	2
	J140	03-23	15-39	1701187	Coupling, 13 tooth	1
	J150	03-23	15-39	4800754	Lifting bracket	1
	J155	03-23	15-39	9007315-0604	Screw	1
S1B5	B095	11-23	15-39	1700256	Check valve poppet	1
	B096	11-23	15-39	1700257	Check valve spring	1
	J010	11-23	15-39	1700955	Shaft, 14 tooth with auxiliary drive	1
	J020	11-23	15-39	11077612	End cap, CW, radial ports, gen. 1, JRR (SB-2010-002)	1
	J030	11-23	15-39	5000181 (9007314-1210)	Screw	4
	J050	11-23	15-39	9004700-1907	Pin	1
	J080	11-23	15-39	4570210	Flange adapter, B pad	1
	J090	11-23	15-39	5000099 (9004100-1550)	O-ring	1
	J095	11-23	15-39	545434 (9004100-0420)	O-ring	1
	J100	11-23	15-39	5000489	Screw	4
	J110	11-23	15-39	4460370	Cover plate	1
	J120	11-23	15-39	9004104-0440	O-ring	1
	J130	11-23	15-39	9007200-5021	Screw	2
	J140	11-23	15-39	1701187	Coupling, 13 tooth	1
	J150	11-23	15-39	4800754	Lifting bracket	1
	J155	11-23	15-39	9007315-0604	Screw	1

Shaft, auxiliary flange and end cap

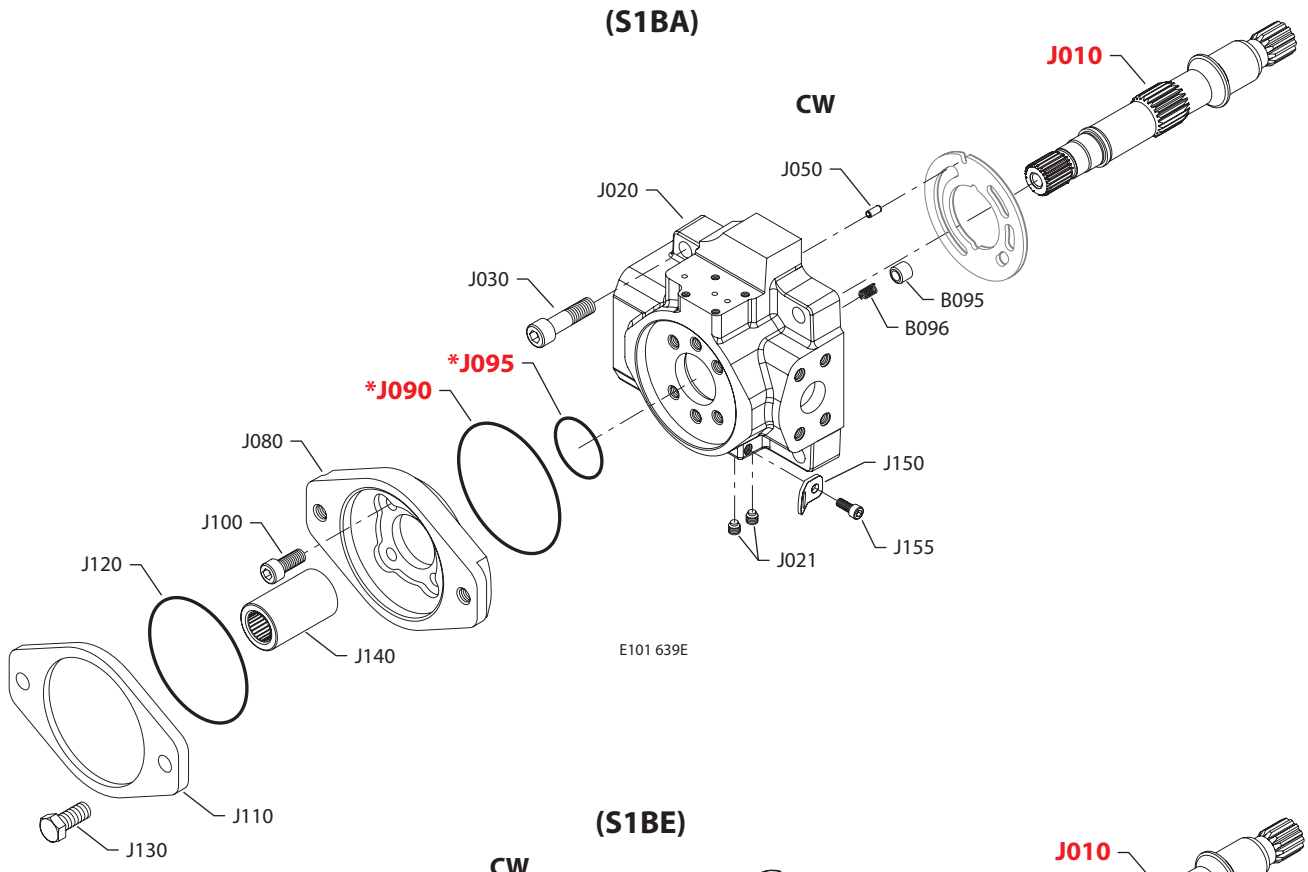

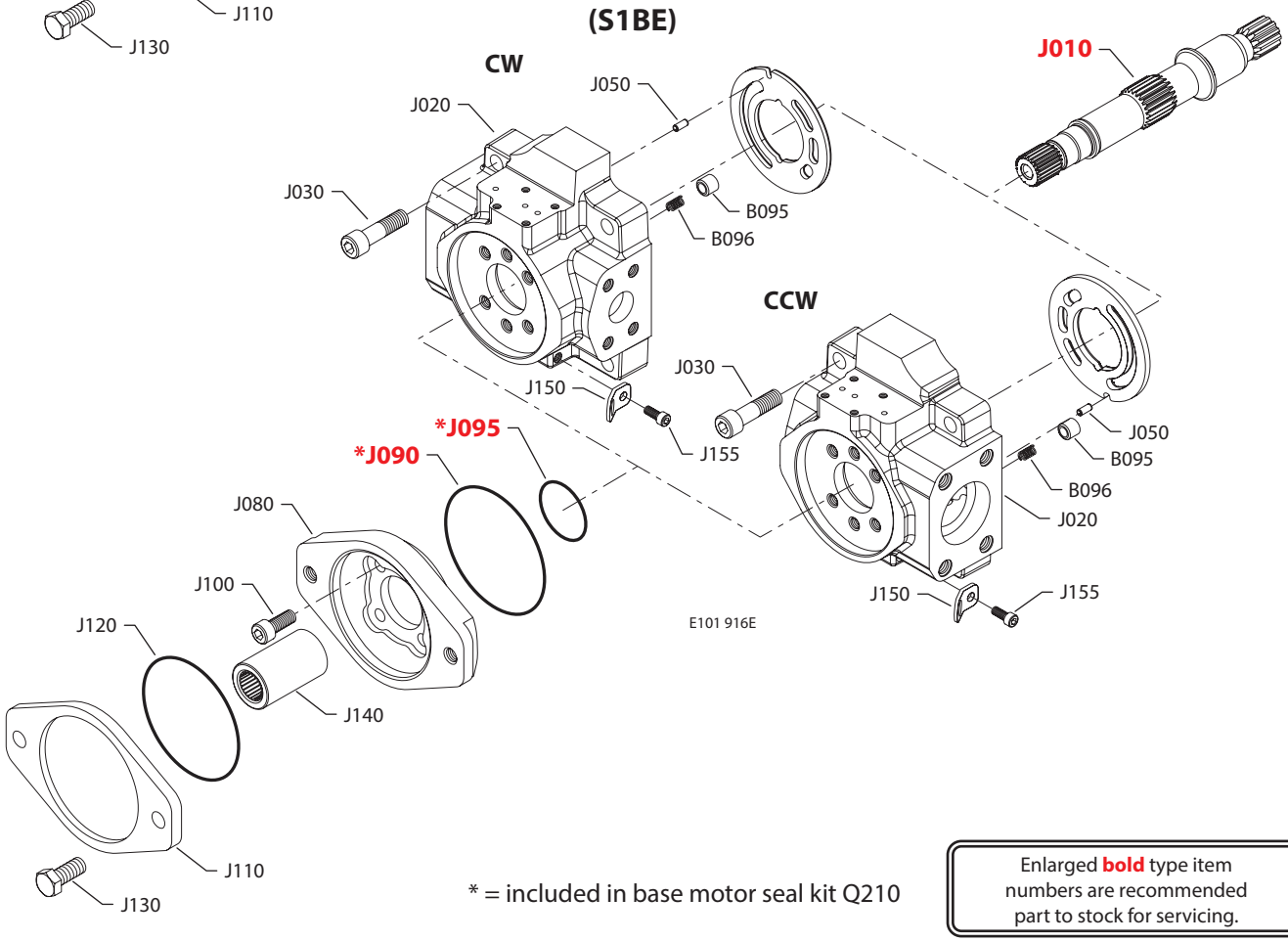

* = included in base motor seal kit Q210

Enlarged **bold** type item numbers are recommended part to stock for servicing.

Shaft, auxiliary flange and end cap

Shaft/auxiliary flange/end cap

Order code	Item	Date begin	Date end	Part number	Part name	Qty. per model/kit
S1BA	B095	11-23		1700256	Check valve poppet	1
	B096	11-23		1700257	Check valve spring	1
	J010	11-23		1700955	Shaft, 14 tooth with auxiliary drive	1
	J020	11-23		11106872	End cap, CW, radial ports, gen. 2, JRR	1
	J021	11-23		4740064	Set screw	2
	J030	11-23		5000181 (9007314-1210)	Screw	4
	J050	11-23		9004700-1907	Pin	1
	J080	11-23		4570210	Flange adapter, B pad	1
	J090	11-23		5000099 (9004100-1550)	O-ring	1
	J095	11-23		545434 (9004100-0420)	O-ring	1
	J100	11-23		5000489	Screw	4
	J110	11-23		4460370	Cover plate	1
	J120	11-23		9004104-0440	O-ring	1
	J130	11-23		9007200-5021	Screw	2
	J140	11-23		1701187	Coupling, 13 tooth	1
	J150	11-23		4800754	Lifting bracket	1
	J155	11-23		9007315-0604	Screw	1
S1BE	B095	03-23		1700256	Check valve poppet	1
	B096	03-23		1700257	Check valve spring	1
	J010	03-23		1700955	Shaft, 14 tooth with auxiliary drive	1
	J020	03-23		11092368	End cap, CW, radial ports, Gen 2, JRR (SB-2010-002)	1
	J020	03-23		11086934	End cap, CCW, radial ports, Gen 2, JRL (SB-2010-002)	1
	J030	03-23		5000181 (9007314-1210)	Screw	4
	J050	03-23		9004700-1907	Pin	1
	J080	03-23		4570210	Flange adapter, B pad	1
	J090	03-23		5000099 (9004100-1550)	O-ring	1
	J095	03-23		545434 (9004100-0420)	O-ring	1
	J100	03-23		5000489	Screw	4
	J110	03-23		4460370	Cover plate	1
	J120	03-23		9004104-0440	O-ring	1
	J130	03-23		9007200-5021	Screw	2
	J140	03-23		1701187	Coupling, 13 tooth	1
	J150	03-23		4800754	Lifting bracket	1
	J155	03-23		9007315-0604	Screw	1

Shaft, auxiliary flange and end cap

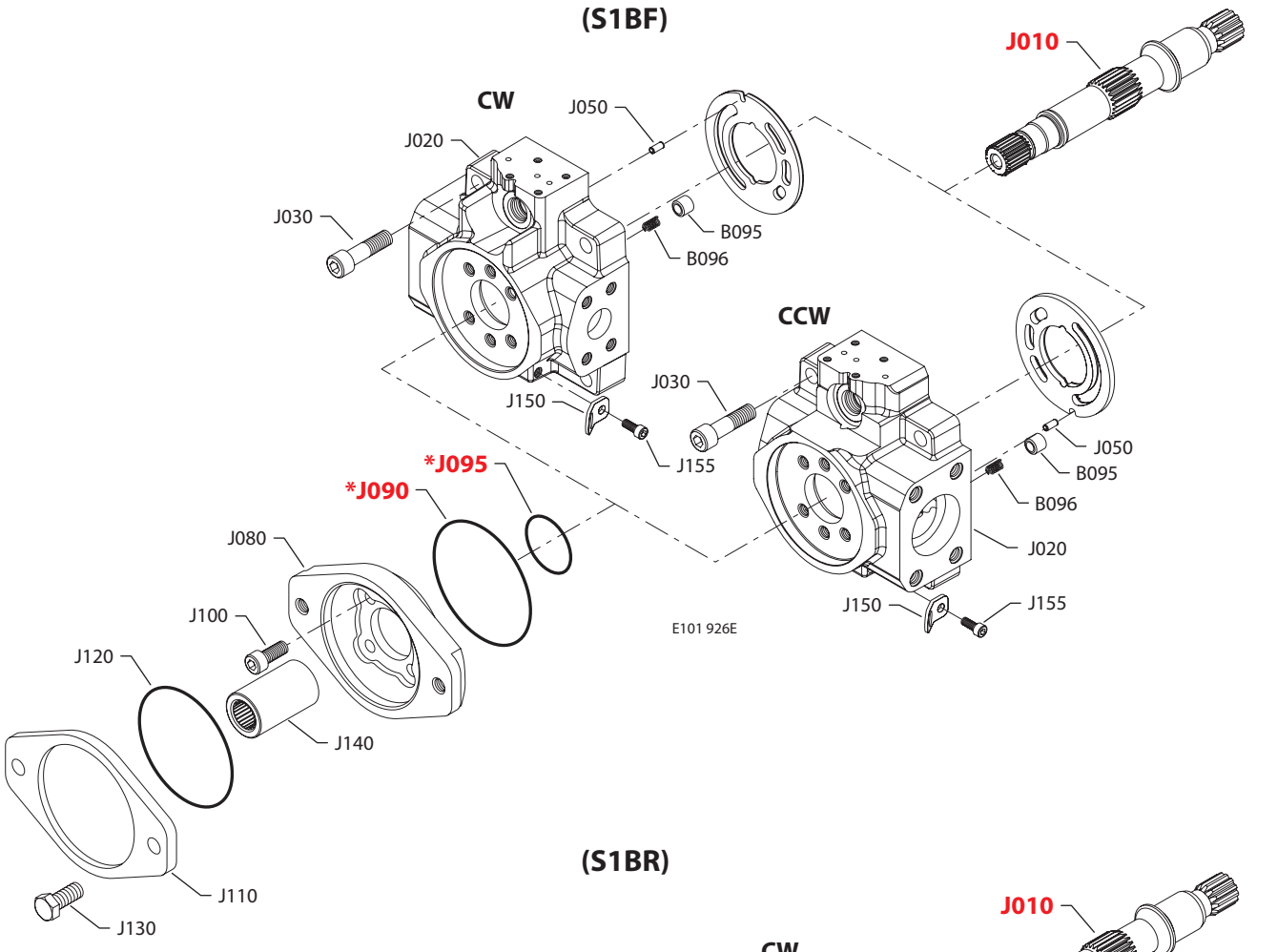

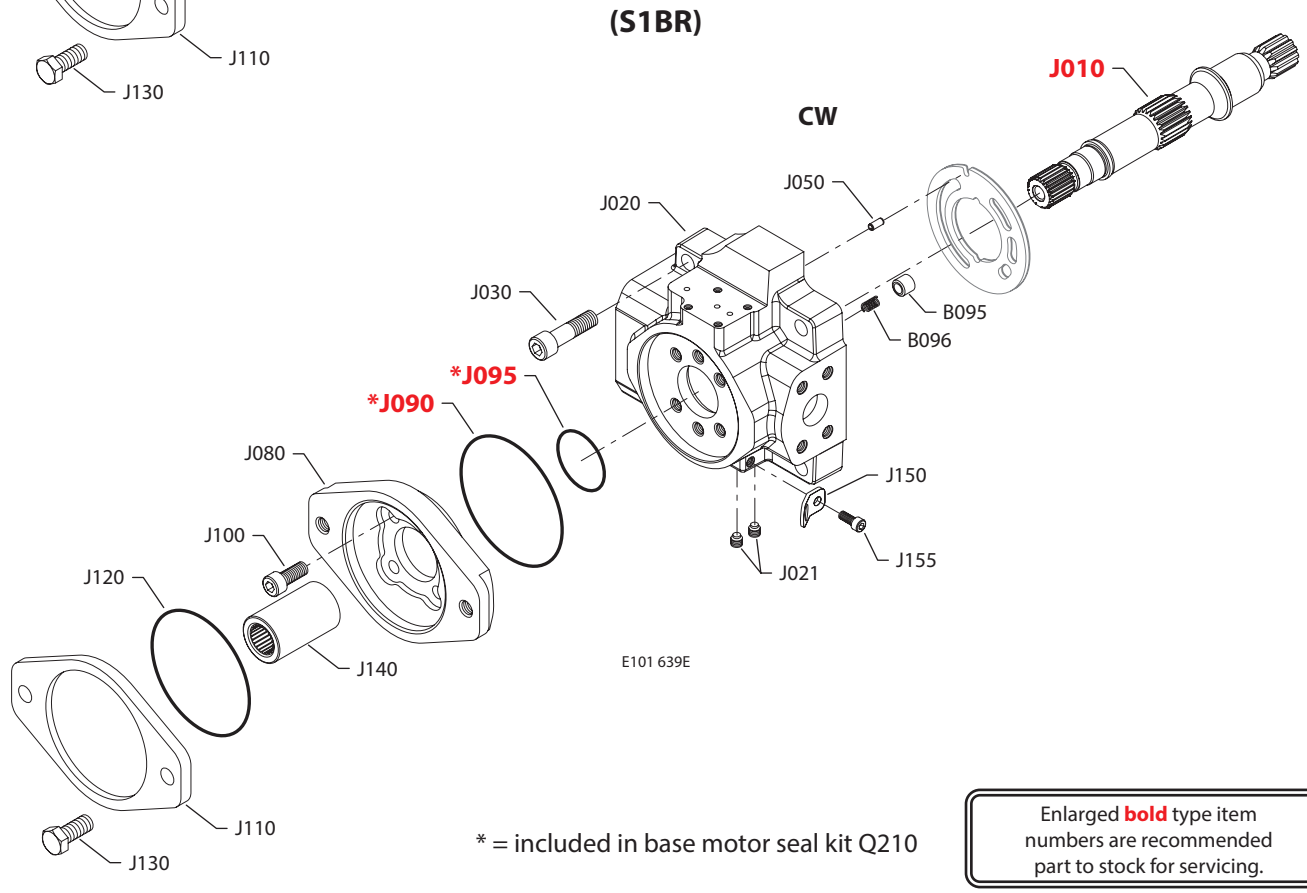

* = included in base motor seal kit Q210

Enlarged **bold** type item numbers are recommended part to stock for servicing.

Shaft, auxiliary flange and end cap

Shaft/auxiliary flange/end cap

Order code	Item	Date begin	Date end	Part number	Part name	Qty. per model/kit
S1BF	B095	11-47		1700256	Check valve poppet	1
	B096	11-47		1700257	Check valve spring	1
	J010	11-47		1700955	Shaft, 14 tooth with auxiliary drive	1
	J020	11-47		11095327	End cap, CW, radial ports, DL, Gen 2, JRR	1
	J020	11-47		11086919	End cap, CCW, radial ports, DL, Gen 2, JRL	2
	J030	11-47		5000181 (9007314-1210)	Screw	4
	J050	11-47		9004700-1907	Pin	1
	J080	11-47		4570210	Flange adapter, B pad	1
	J090	11-47		5000099 (9004100-1550)	O-ring	1
	J095	11-47		545434 (9004100-0420)	O-ring	1
	J100	11-47		5000489	Screw	4
	J110	11-47		4460370	Cover plate	1
	J120	11-47		9004104-0440	O-ring	1
	J130	11-47		9007200-5021	Screw	2
	J140	11-47		1701187	Coupling, 13 tooth	1
	J150	11-47		4800754	Lifting bracket	1
	J155	11-47		9007315-0604	Screw	1
S1BR	B095	10-04	15-39	1700256	Check valve poppet	1
	B096	10-04	15-39	1700257	Check valve spring	1
	J010	10-04	15-39	1700955	Shaft, 14 tooth with auxiliary drive	1
	J020	10-04	15-39	11078128	End cap, CW, radial ports, gen. 1, JRR (SB-2010-002)	1
	J021	10-04	15-39	4740064	Set screw, dog point	2
	J030	10-04	15-39	5000181 (9007314-1210)	Screw	4
	J050	10-04	15-39	9004700-1907	Pin	1
	J080	10-04	15-39	4570210	Flange adapter, B pad	1
	J090	10-04	15-39	5000099 (9004100-1550)	O-ring	1
	J095	10-04	15-39	545434 (9004100-0420)	O-ring	1
	J100	10-04	15-39	5000489	Screw	4
	J110	10-04	15-39	4460370	Cover plate	1
	J120	10-04	15-39	9004104-0440	O-ring	1
	J130	10-04	15-39	9007200-5021	Screw	2
	J140	10-04	15-39	1701187	Coupling, 13 tooth	1
	J150	10-04	15-39	4800754	Lifting bracket	1
	J155	10-04	15-39	9007315-0604	Screw	1

Shaft, auxiliary flange and end cap

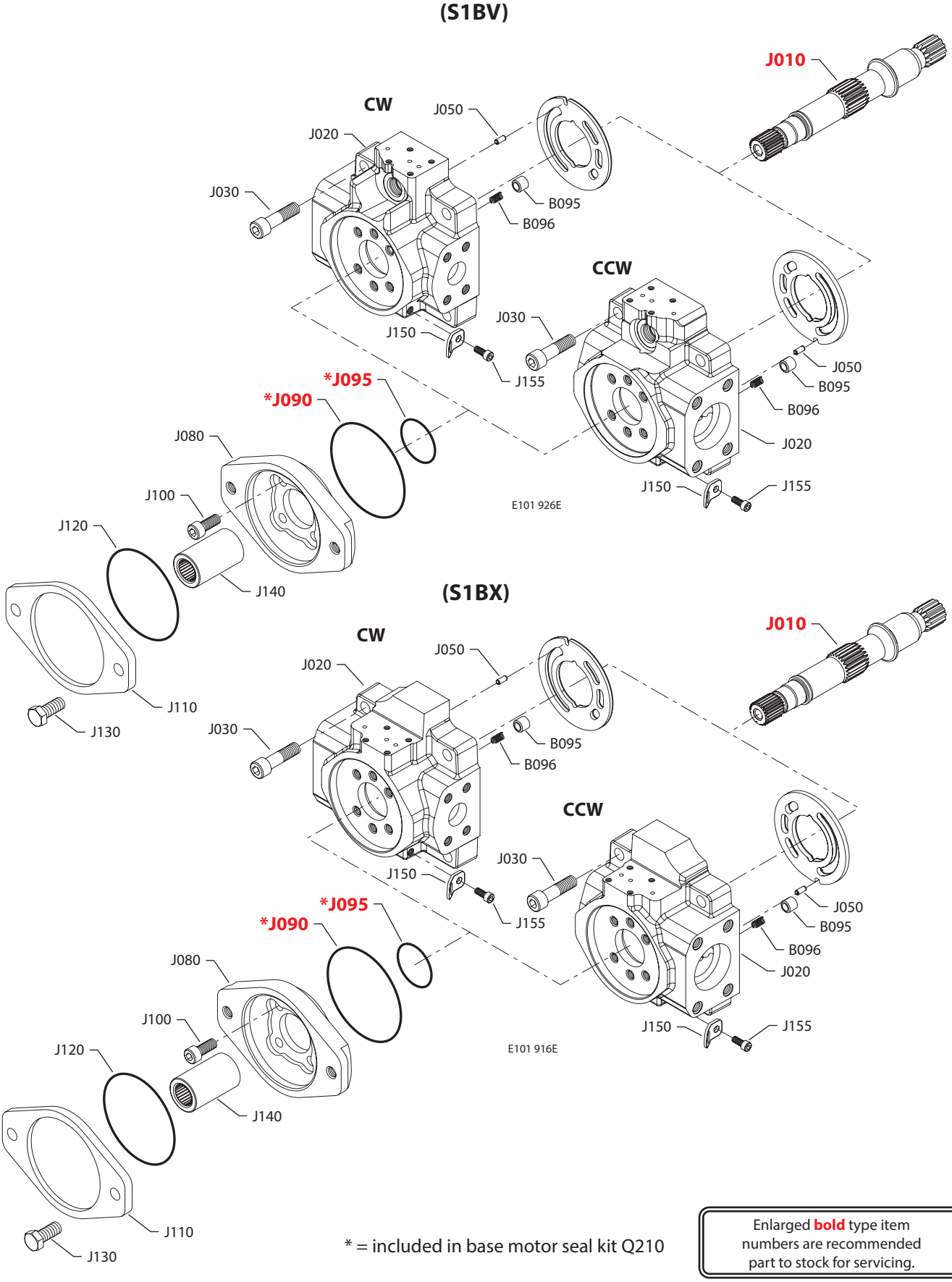

* = included in base motor seal kit Q210

Enlarged **bold** type item numbers are recommended part to stock for servicing.

Shaft, auxiliary flange and end cap

Shaft/auxiliary flange/end cap

Order code	Item	Date begin	Date end	Part number	Part name	Qty. per model/kit
S1BV	B095	03-23		1700256	Check valve poppet	1
	B096	03-23		1700257	Check valve spring	1
	J010	03-23		1700955	Shaft, 14 tooth with auxiliary drive	1
	J020	03-23	15-37	11077604	End cap, CW, radial ports, DL, gen. 1, JRR (SB-2010-002)	1
	J020	03-23	15-37	11077608	End cap, CCW, radial ports, DL, Gen 1, JRL (SB-2010-002)	1
	J030	03-23		5000181 (9007314-1210)	Screw	4
	J050	03-23		9004700-1907	Pin	1
	J080	03-23		4570210	Flange adapter, B pad	1
	J090	03-23		5000099 (9004100-1550)	O-ring	1
	J095	03-23		545434 (9004100-0420)	O-ring	1
	J100	03-23		5000489	Screw	4
	J110	03-23		4460370	Cover plate	1
	J120	03-23		9004104-0440	O-ring	1
	J130	03-23		9007200-5021	Screw	2
	J140	03-23		1701187	Coupling, 13 tooth	1
	J150	03-23		4800754	Lifting bracket	1
	J155	03-23		9007315-0604	Screw	1
S1BX	B095	03-23		1700256	Check valve poppet	1
	B096	03-23		1700257	Check valve spring	1
	J010	03-23		1700955	Shaft, 14 tooth with auxiliary drive	1
	J020	03-23		11106867	End cap, CW, radial ports, gen. 2, JRR	1
	J020	03-23		11117044	End cap, CCW, radial ports, gen. 2, JRL	1
	J030	03-23		5000181 (9007314-1210)	Screw	4
	J050	03-23		9004700-1907	Pin	1
	J080	03-23		4570210	Flange adapter, B pad	1
	J090	03-23		5000099 (9004100-1550)	O-ring	1
	J095	03-23		545434 (9004100-0420)	O-ring	1
	J100	03-23		5000489	Screw	4
	J110	03-23		4460370	Cover plate	1
	J120	03-23		9004104-0440	O-ring	1
	J130	03-23		9007200-5021	Screw	2
	J140	03-23		1701187	Coupling, 13 tooth	1
	J150	03-23		4800754	Lifting bracket	1
	J155	03-23		9007315-0604	Screw	1

Shaft, auxiliary flange and end cap

(S1C2 & S1C5)

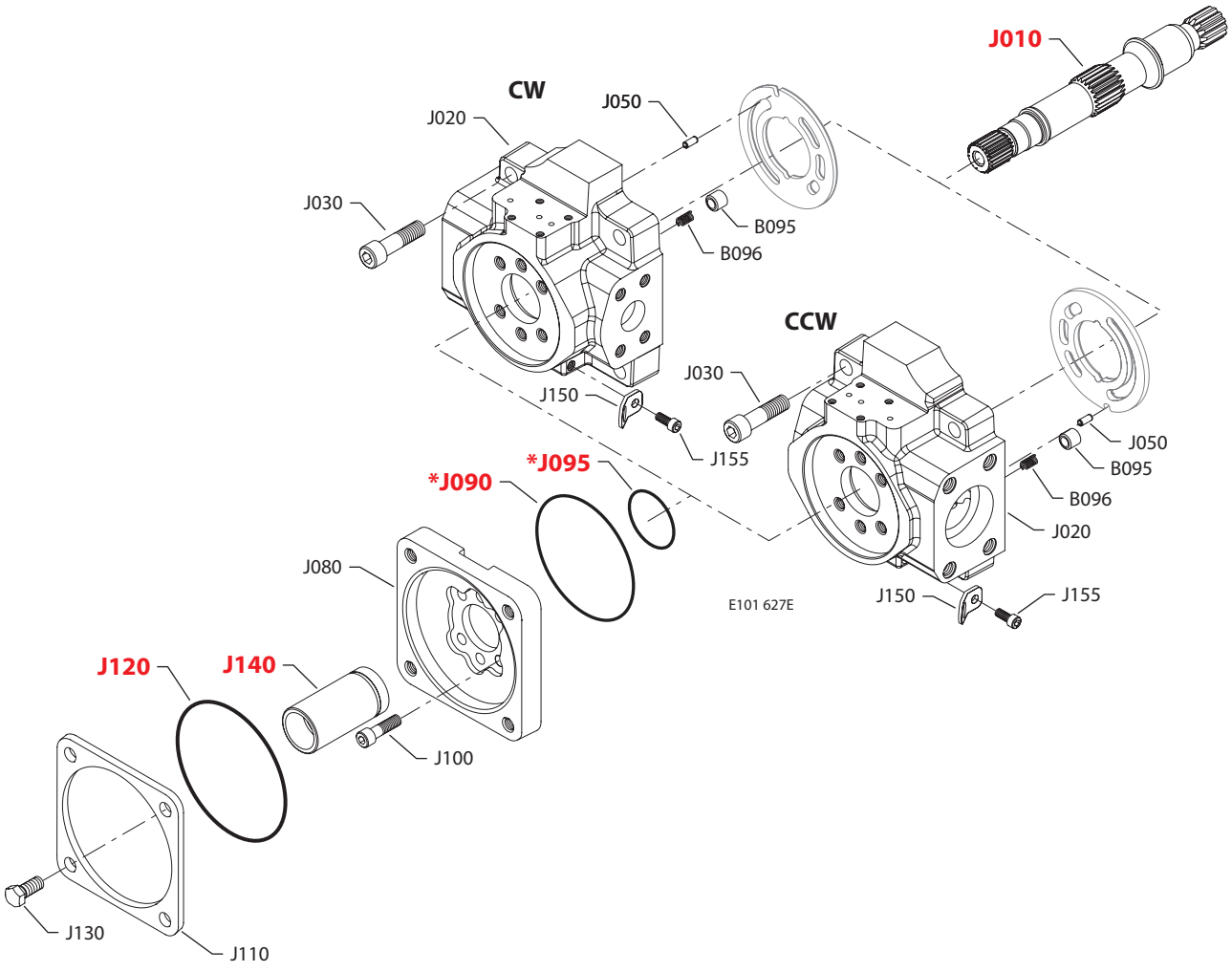

* = included in base motor seal kit Q210

Enlarged **bold** type item numbers are recommended part to stock for servicing.

Shaft, auxiliary flange and end cap

Shaft/auxiliary flange/end cap

Order code	Item	Date begin	Date end	Part number	Part name	Qty. per model/kit
S1C2	B095	03-23	15-39	1700256	Check valve poppet	1
	B096	03-23	15-39	1700257	Check valve spring	1
	J010	03-23	15-39	1700955	Shaft, 14 tooth with auxiliary drive	1
	J020	03-23	15-39	11077600	End cap, CW, radial ports, gen. 1, JRR (SB-2010-002)	1
	J020	03-23	15-39	11077606	End cap, CCW, radial ports, gen. 1, JRL (SB-2010-002)	1
	J030	03-23	15-39	5000181 (9007314-1210)	Screw	4
	J050	03-23	15-39	9004700-1907	Pin	1
	J080	03-23	15-39	11039356	Flange adapter, C pad (SB-2008-052)	1
	J090	03-23	15-39	5000099 (9004100-1550)	O-ring	1
	J095	03-23	15-39	545434 (9004100-0420)	O-ring	1
	J100	03-23	15-39	5000489	Screw	6
	J110	03-23	15-39	8800406	Cover plate	1
	J120	03-23	15-39	9004100-0480	O-ring	1
	J130	03-23	15-39	9007200-5021	Screw	4
	J140	03-23	15-39	4570133	Coupling, 14 tooth	1
	J150	03-23	15-39	4800754	Lifting bracket	1
	J155	03-23	15-39	9007315-0604	Screw	1
S1C5	B095	03-23	15-39	1700256	Check valve poppet	1
	B096	03-23	15-39	1700257	Check valve spring	1
	J010	03-23	15-39	1700955	Shaft, 14 tooth with auxiliary drive	1
	J020	03-23	15-39	11077612	End cap, CW, radial metic ports, gen. 1, JRR (SB-2010-002)	1
	J030	03-23	15-39	5000181 (9007314-1210)	Screw	4
	J050	03-23	15-39	9004700-1907	Pin	1
	J080	03-23	15-39	11039356	Flange adapter, C pad (SB-2008-052)	1
	J090	03-23	15-39	5000099 (9004100-1550)	O-ring	1
	J095	03-23	15-39	545434 (9004100-0420)	O-ring	1
	J100	03-23	15-39	5000489	Screw	6
	J110	03-23	15-39	8800406	Cover plate	1
	J120	03-23	15-39	9004100-0480	O-ring	1
	J130	03-23	15-39	9007200-5021	Screw	4
	J140	03-23	15-39	4570133	Coupling, 14 tooth	1
	J150	03-23	15-39	4800754	Lifting bracket	1
	J155	03-23	15-39	9007315-0604	Screw	1

Shaft, auxiliary flange and end cap

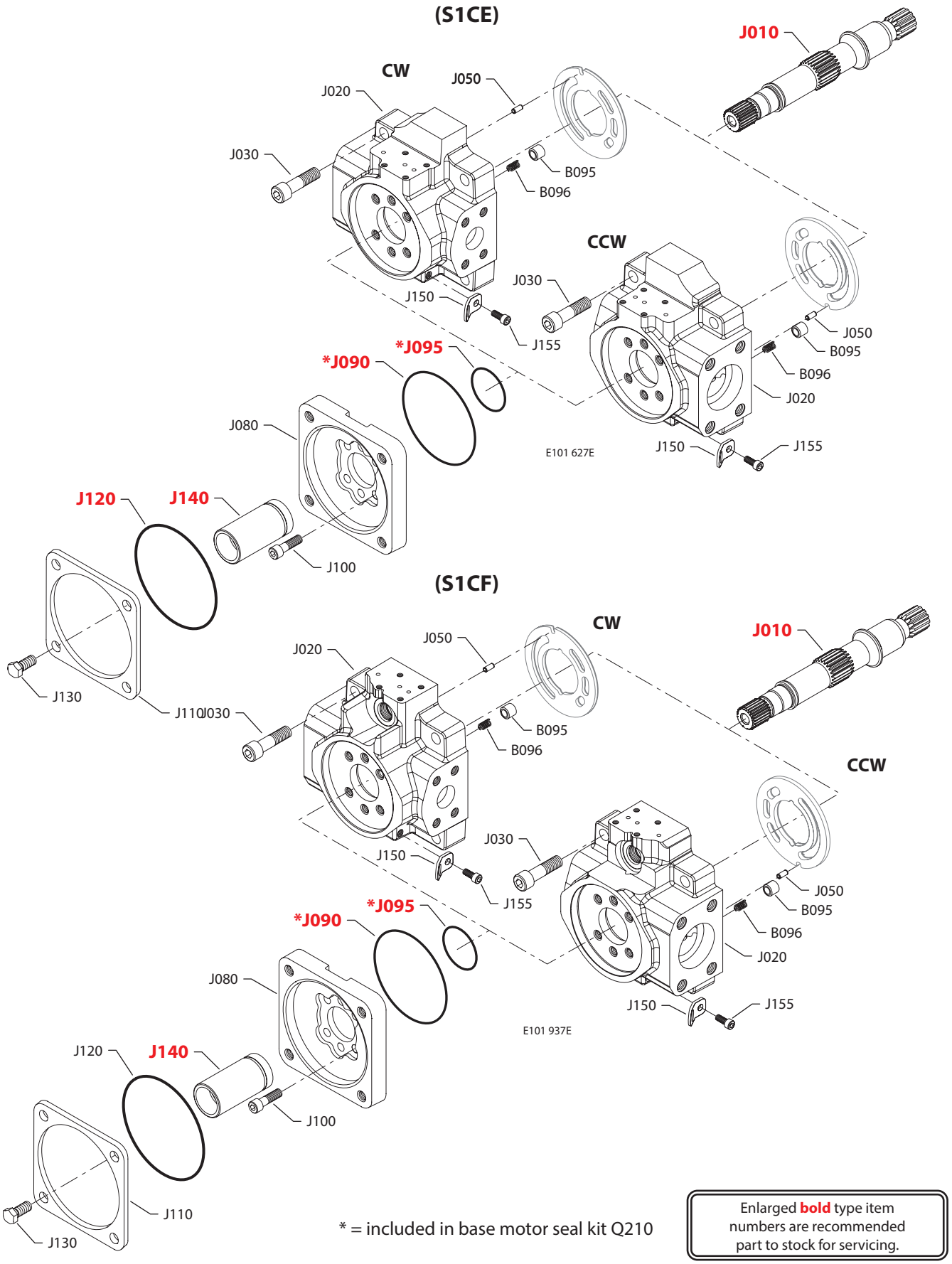

* = included in base motor seal kit Q210

Enlarged **bold** type item numbers are recommended part to stock for servicing.

Shaft, auxiliary flange and end cap

Shaft/auxiliary flange/end cap

Order code	Item	Date begin	Date end	Part number	Part name	Qty. per model/kit
S1CE	B095	03-23		1700256	Check valve poppet	1
	B096	03-23		1700257	Check valve spring	1
	J010	03-23		1700955	Shaft, 14 tooth with auxiliary drive	1
	J020	03-23		11092368	End cap, CW, radial ports, gen. 2, JRR (SB-2010-002)	1
	J020	03-23		11086934	End cap, CCW, radial ports, gen. 2, JRL (SB-2010-002)	1
	J030	03-23		5000181 (9007314-1210)	Screw	4
	J050	03-23		9004700-1907	Pin	1
	J080	03-23		11039356	Flange adapter, C pad (SB-2008-052)	1
	J090	03-23		5000099 (9004100-1550)	O-ring	1
	J095	03-23		545434 (9004100-0420)	O-ring	1
	J100	03-23		5000489	Screw	6
	J110	03-23		8800406	Cover plate	1
	J120	03-23		9004100-0480	O-ring	1
	J130	03-23		9007200-5021	Screw	4
	J140	03-23		4570133	Coupling, 14 tooth	1
	J150	03-23		4800754	Lifting bracket	1
	J155	03-23		9007315-0604	Screw	1
S1CF	B095	03-23		1700256	Check valve poppet	1
	B096	03-23		1700257	Check valve spring	1
	J010	03-23		1700955	Shaft, 14 tooth with auxiliary drive	1
	J020	03-23		11095327	End cap, CW, radial ports, DL, gen. 2, JRR (SB-2010-002)	1
	J020	03-23		11086919	End cap, CCW, radial ports, DL, gen. 2, JRL (SB-2010-002)	1
	J030	03-23		5000181 (9007314-1210)	Screw	4
	J050	03-23		9004700-1907	Pin	1
	J080	03-23		11039356	Flange adapter, C pad (SB-2008-052)	1
	J090	03-23		5000099 (9004100-1550)	O-ring	1
	J095	03-23		545434 (9004100-0420)	O-ring	1
	J100	03-23		5000489	Screw	6
	J110	03-23		8800406	Cover plate	1
	J120	03-23		9004100-0480	O-ring	1
	J130	03-23		9007200-5021	Screw	4
	J140	03-23		4570133	Coupling, 14 tooth	1
	J150	03-23		4800754	Lifting bracket	1
	J155	03-23		9007315-0604	Screw	

Shaft, auxiliary flange and end cap

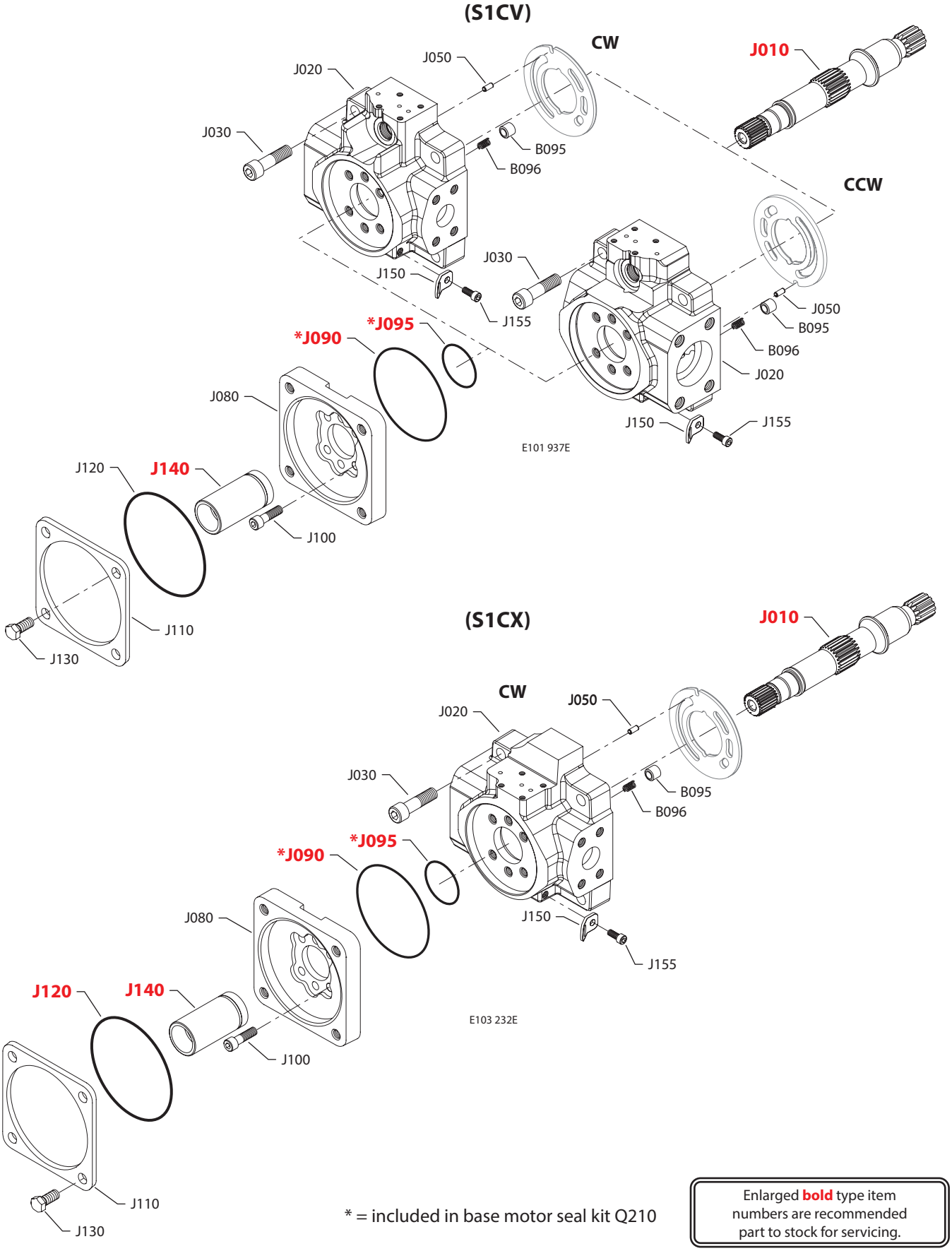

* = included in base motor seal kit Q210

Enlarged **bold** type item numbers are recommended part to stock for servicing.

Shaft, auxiliary flange and end cap

Shaft/auxiliary flange/end cap

Order code	Item	Date begin	Date end	Part number	Part name	Qty. per model/kit
S1CV	B095	03-23	15-37	1700256	Check valve poppet	1
	B096	03-23	15-37	1700257	Check valve spring	1
	J010	03-23	15-37	1700955	Shaft, 14 tooth with auxiliary drive	1
	J020	03-23	15-37	11077604	End cap, CW, radial ports, DL, gen. 1, JRR (SB-2010-002)	1
	J020	03-23	15-37	11077608	End cap, CCW, radial ports, DL, gen. 1, JRL (SB-2010-002)	1
	J030	03-23	15-37	5000181 (9007314-1210)	Screw	4
	J050	03-23	15-37	9004700-1907	Pin	1
	J080	03-23	15-37	11039356	Flange adapter, C pad (SB-2008-052)	1
	J090	03-23	15-37	5000099 (9004100-1550)	O-ring	1
	J095	03-23	15-37	545434 (9004100-0420)	O-ring	1
	J100	03-23	15-37	5000489	Screw	6
	J110	03-23	15-37	8800406	Cover plate	1
	J120	03-23	15-37	9004100-0480	O-ring	1
	J130	03-23	15-37	9007200-5021	Screw	4
	J140	03-23	15-37	4570133	Coupling, 14 tooth	1
	J150	03-23	15-37	4800754	Lifting bracket	1
	J155	03-23	15-37	9007315-0604	Screw	1
S1CX	B095	12-07		1700256	Check valve poppet	1
	B096	12-07		1700257	Check valve spring	1
	J010	12-07		1700955	Shaft, 14 tooth with auxiliary drive	1
	J020	12-07		11106867	End cap, CW, radial ports, gen. 2, JRR	1
	J030	12-07		5000181 (9007314-1210)	Screw	4
	J050	12-07		9004700-1907	Pin	1
	J080	12-07		11039356	Flange adapter, C pad	1
	J090	12-07		5000099 (9004100-1550)	O-ring	1
	J095	12-07		545434 (9004100-0420)	O-ring	1
	J100	12-07		5000489	Screw	6
	J110	12-07		8800406	Cover plate	1
	J120	12-07		9004100-0480	O-ring	1
	J130	12-07		9007200-5021	Screw	4
	J140	12-07		4570133	Coupling, 14 tooth	1
	J150	12-07		4800754	Lifting bracket	1
	J155	12-07		9007315-0604	Screw	1

Shaft, auxiliary flange and end cap

(S1D6 & S1DH)

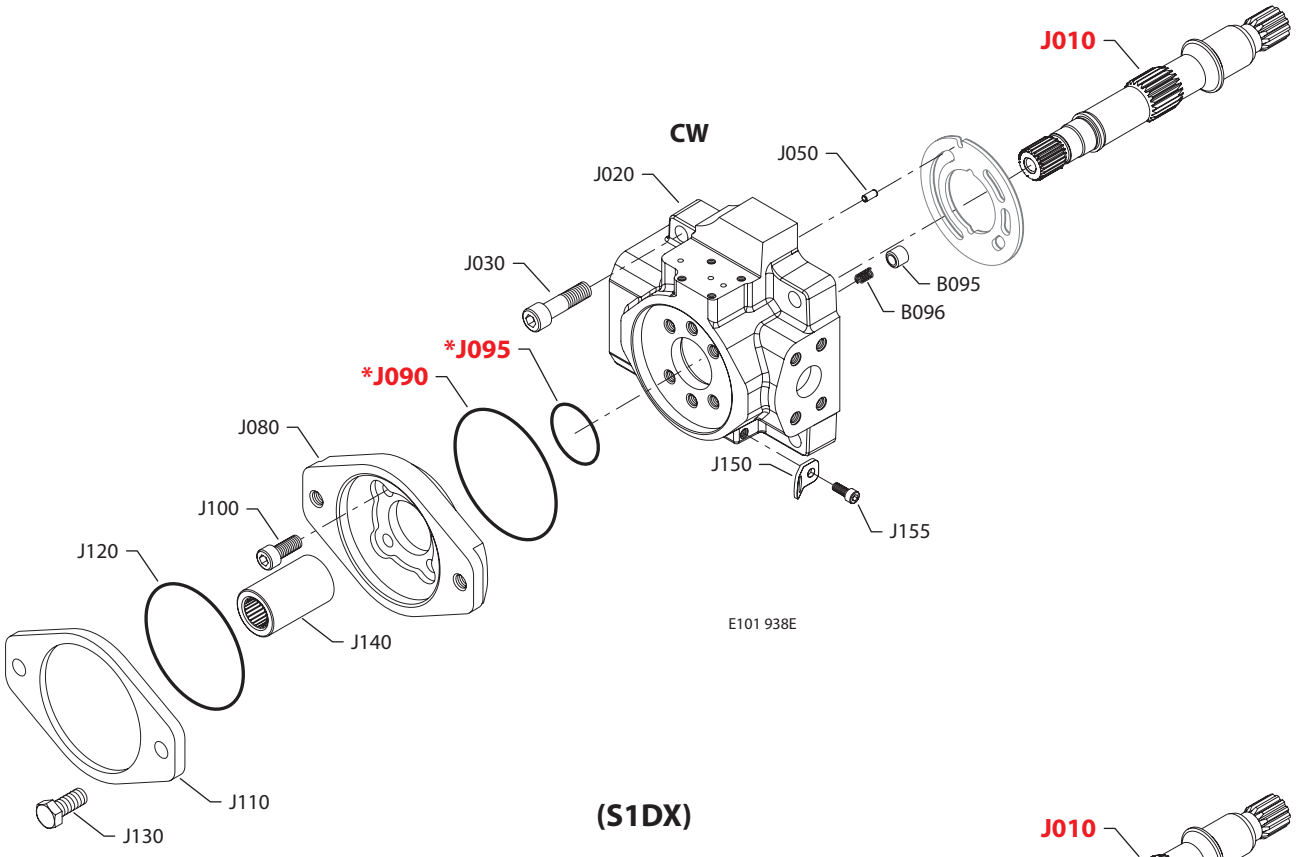

(S1DX)

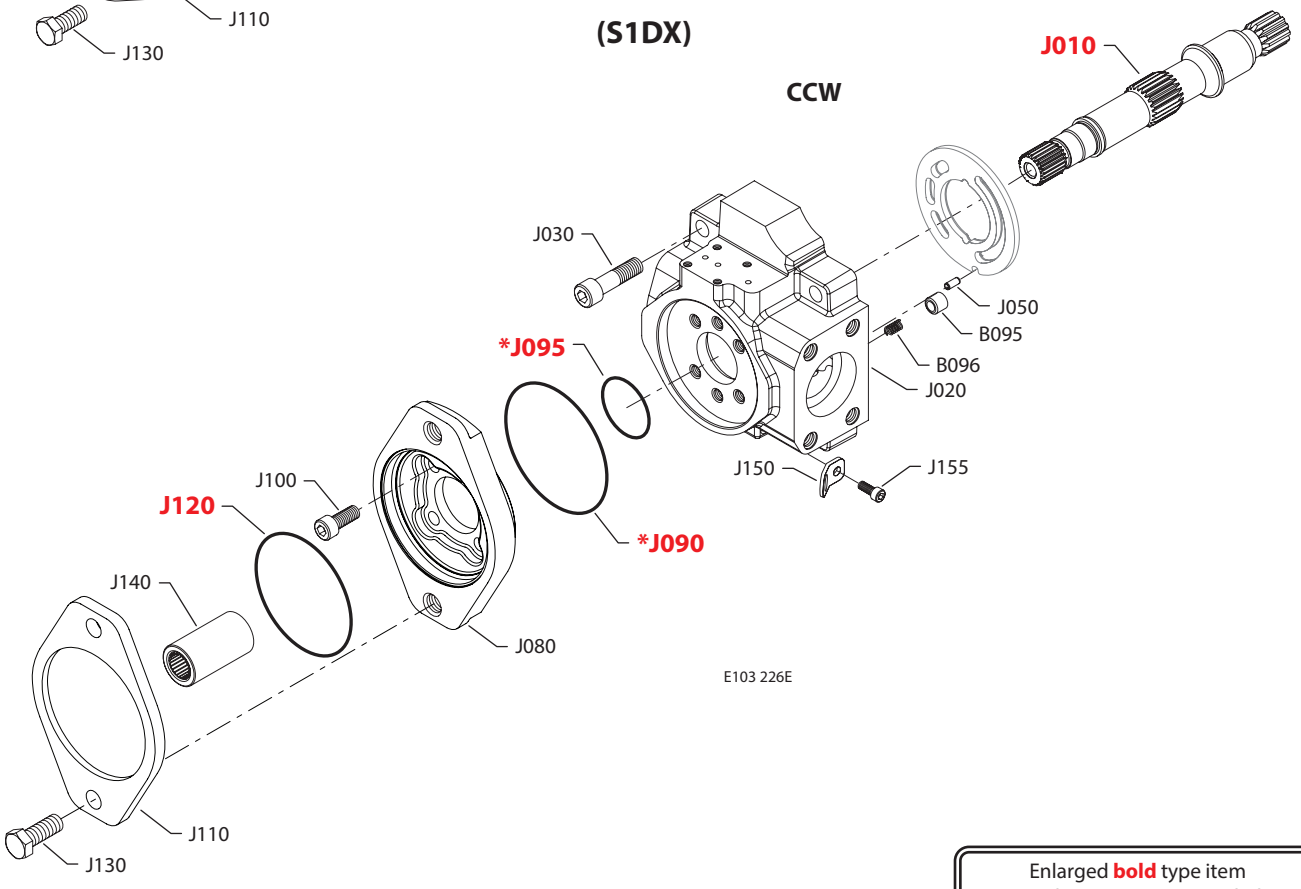

* = included in base motor seal kit Q210

Enlarged **bold** type item numbers are recommended part to stock for servicing.

Shaft, auxiliary flange and end cap

Shaft/auxiliary flange/end cap

Order code	Item	Date begin	Date end	Part number	Part name	Qty. per model/kit
S1D6	B095	03-23		1700256	Check valve poppet	1
	B096	03-23		1700257	Check valve spring	1
	J010	03-23		1700955	Shaft, 14 tooth with auxiliary drive	1
	J020	03-23		11086541	End cap, CW, radial ports, gen. 2, JRR (SB-2010-002)	1
	J030	03-23		5000181 (9007314-1210)	Screw	4
	J050	03-23		9004700-1907	Pin	1
	J080	03-23		4570390	Flange adapter, B pad, metric	1
	J090	03-23		5000099 (9004100-1550)	O-ring	1
	J095	03-23		545434 (9004100-0420)	O-ring	1
	J100	03-23		5000489	Screw	4
	J110	03-23		4460370	Cover plate	1
	J120	03-23		9004100-0440	O-ring	1
	J130	03-23		370320	Screw	4
	J140	03-23		1701187	Coupling, 13 tooth	1
	J150	03-23		4800754	Lifting bracket	1
	J155	03-23		9007315-0604	Screw	1
S1DH	B095	08-34		1700256	Check valve poppet	1
	B096	08-34		1700257	Check valve spring	1
	J010	08-34		1700955	Shaft, 14 tooth with auxiliary drive	1
	J020	08-34		11086678	End cap, CW, radial ports, gen. 2, JRR (SB-2010-002)	1
	J030	08-34		5000181 (9007314-1210)	Screw	4
	J050	08-34		9004700-1907	Pin	1
	J080	08-34		4570390	Flange adapter, B pad, metric	1
	J090	08-34		5000099 (9004100-1550)	O-ring	1
	J095	08-34		545434 (9004100-0420)	O-ring	1
	J100	08-34		5000489	Screw	4
	J110	08-34		4460370	Cover plate	1
	J120	08-34		9004104-0440	O-ring	1
	J130	08-34		370320	Screw	4
	J140	08-34		1701187	Coupling, 13 tooth	1
	J150	08-34		4800754	Lifting bracket	1
	J155	08-34		9007315-0604	Screw	1
S1DX	B095	12-33		1700256	Check valve poppet	1
	B096	12-33		1700257	Check valve spring	1
	J010	12-33		1700955	Shaft, 14 tooth with auxiliary drive	1
	J020	12-33		11117044	End cap, CCW, radial ports, gen. 2 JRL	1
	J030	12-33		5000181 (9007314-1210)	Screw	4
	J050	12-33		9004700-1907	Pin	1
	J080	12-33		4570390	Flange adapter, B pad, metric	1
	J090	12-33		5000099 (9004100-1550)	O-ring	1
	J095	12-33		545434 (9004100-0420)	O-ring	1
	J100	12-33		5000489	Screw	4
	J110	12-33		4460370	Cover plate	1
	J120	12-33		9004100-0440	O-ring	1
	J130	12-33		370320	Screw	4
	J140	12-33		1701188	Coupling, 15 tooth	1
	J150	12-33		4800754	Lifting bracket	1
	J155	12-33		9007315-0604	Screw	1

Shaft, auxiliary flange and end cap

(S1GE & S1GH)

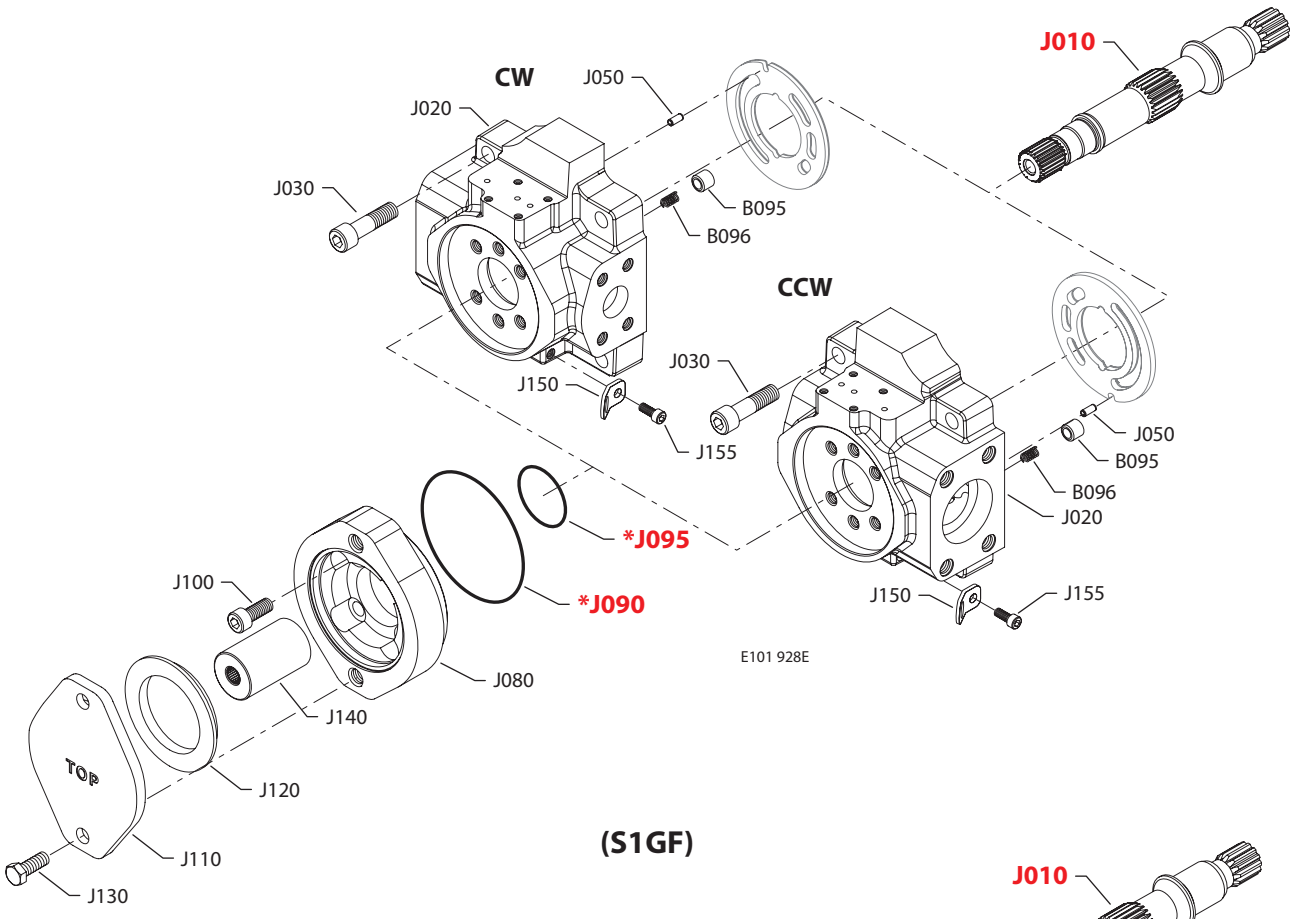

(S1GF)

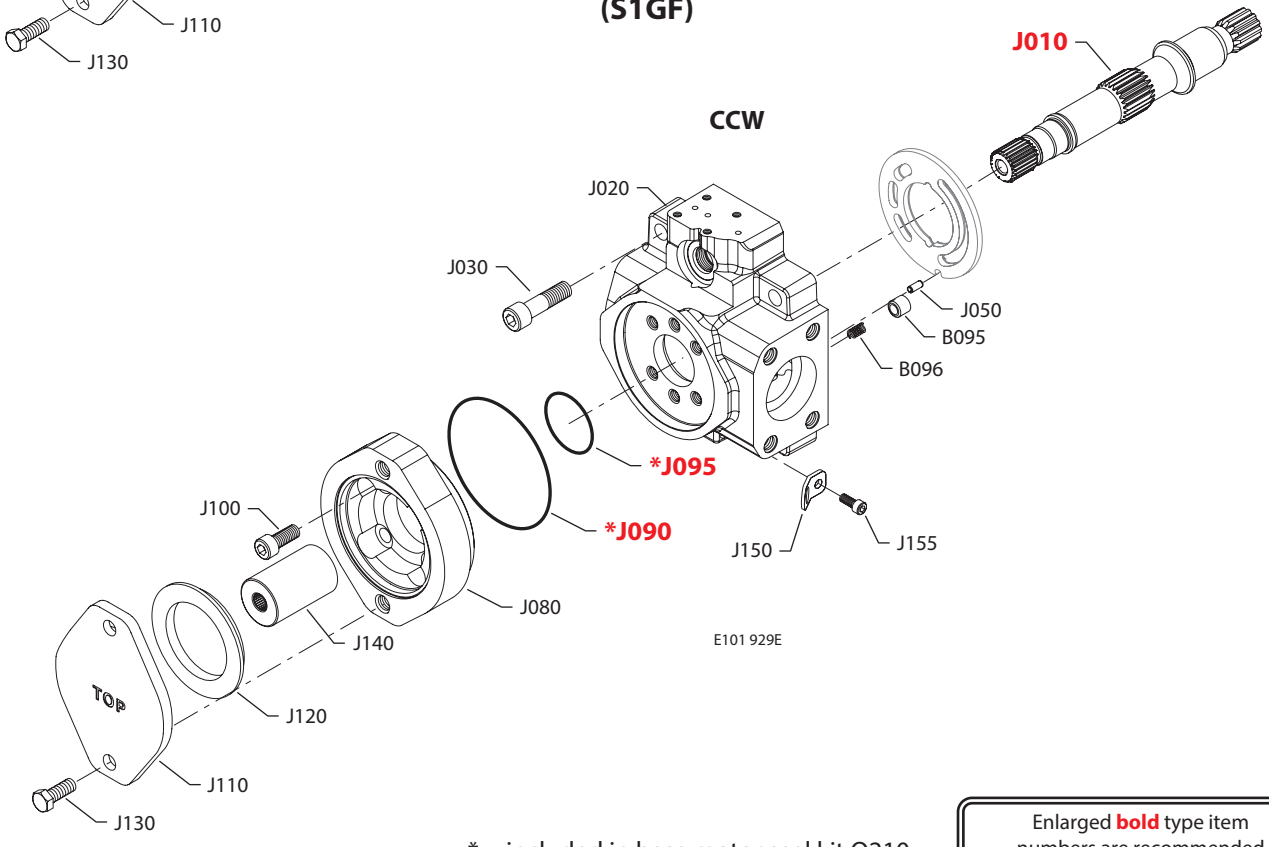

* = included in base motor seal kit Q210

Enlarged **bold** type item numbers are recommended part to stock for servicing.

Shaft, auxiliary flange and end cap

Shaft/auxiliary flange/end cap

Order code	Item	Date begin	Date end	Part number	Part name	Qty. per model/kit
S1GE	B095	11-45		1700256	Check valve poppet	1
	B096	11-45		1700257	Check valve spring	1
	J010	11-45		1700955	Shaft, 14 tooth with auxiliary drive	1
	J020	11-45		11092368	End cap, CW, radial ports, gen. 2, JRR	1
	J020	11-45		11086934	End cap, CCW, radial ports, gen. 2, JRL	1
	J030	11-45		5000181 (9007314-1210)	Screw	4
	J050	11-45		9004700-1907	Pin	1
	J080	11-45		4570289	Flange adapter, A pad	1
	J090	11-45		5000099 (9004100-1550)	O-ring	1
	J095	11-45		545434 (9004100-0420)	O-ring	1
	J100	11-45		5000489	Screw	4
	J110	11-45		4460586	Cover plate	1
	J120	11-45		4800482	A pad seal	1
	J130	11-45		9007200-3712	Screw	2
	J140	11-45		1701186	Coupling, 11 tooth	1
	J150	11-45		4800754	Lifting bracket	1
	J155	11-45		9007315-0604	Screw	1
S1GF	B095	12-04		1700256	Check valve poppet	1
	B096	12-04		1700257	Check valve spring	1
	J010	12-04		1700955	Shaft, 14 tooth with auxiliary drive	1
	J020	12-04		11086919	End cap, CCW, radial ports, DL, gen. 2, JRL	1
	J030	12-04		5000181 (9007314-1210)	Screw	4
	J050	12-04		9004700-1907	Pin	1
	J080	12-04		4570289	Flange adapter, A pad	1
	J090	12-04		5000099 (9004100-1550)	O-ring	1
	J095	12-04		545434 (9004100-0420)	O-ring	1
	J100	12-04		5000489	Screw	4
	J110	12-04		4460586	Cover plate	1
	J120	12-04		4800482	A pad seal	1
	J130	12-04		9007200-3712	Screw	2
	J140	12-04		1701186	Coupling, 11 tooth	1
	J150	12-04		4800754	Lifting bracket	1
	J155	12-04		9007315-0604	Screw	1
S1GH	B095	12-26		1700256	Check valve poppet	1
	B096	12-26		1700257	Check valve spring	1
	J010	12-26		1700955	Shaft, 14 tooth with auxiliary drive	1
	J020	12-26		11086934	End cap, CCW, radial ports, gen. 2, JRL	1
	J030	12-26		5000181 (9007314-1210)	Screw	4
	J050	12-26		9004700-1907	Pin	1
	J080	12-26		4570430	Flange adapter, A pad, metric	1
	J090	12-26		5000099 (9004100-1550)	O-ring	1
	J095	12-26		545434 (9004100-0420)	O-ring	1
	J100	12-26		5000489	Screw	4
	J110	12-26		4460586	Cover plate	1
	J120	12-26		4800482	A pad seal	1
	J130	12-26		5000622	Screw	2
	J140	12-26		1701186	Coupling, 11 tooth	1
	J150	12-26		4800754	Lifting bracket	1
	J155	12-26		9007315-0604	Screw	1

Shaft, auxiliary flange and end cap

(S1GX)

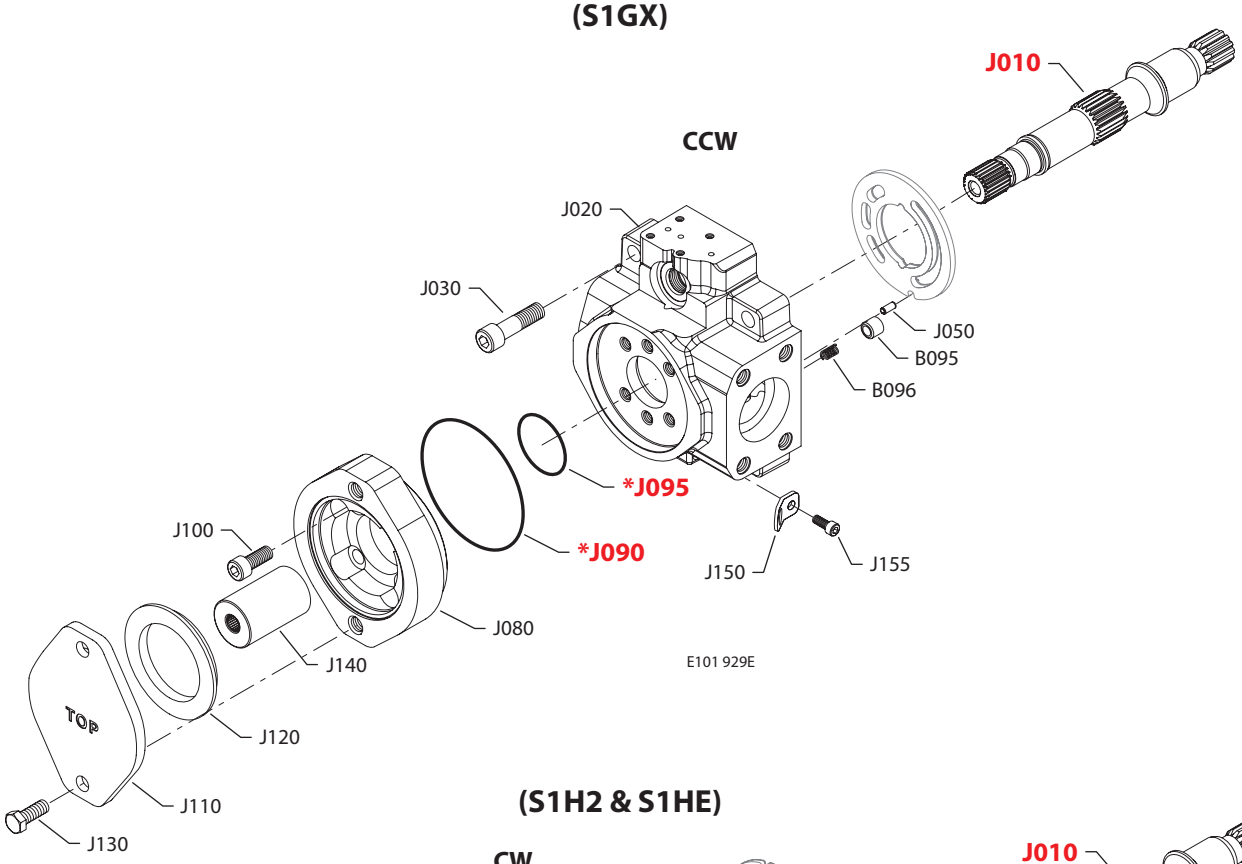

(S1H2 & S1HE)

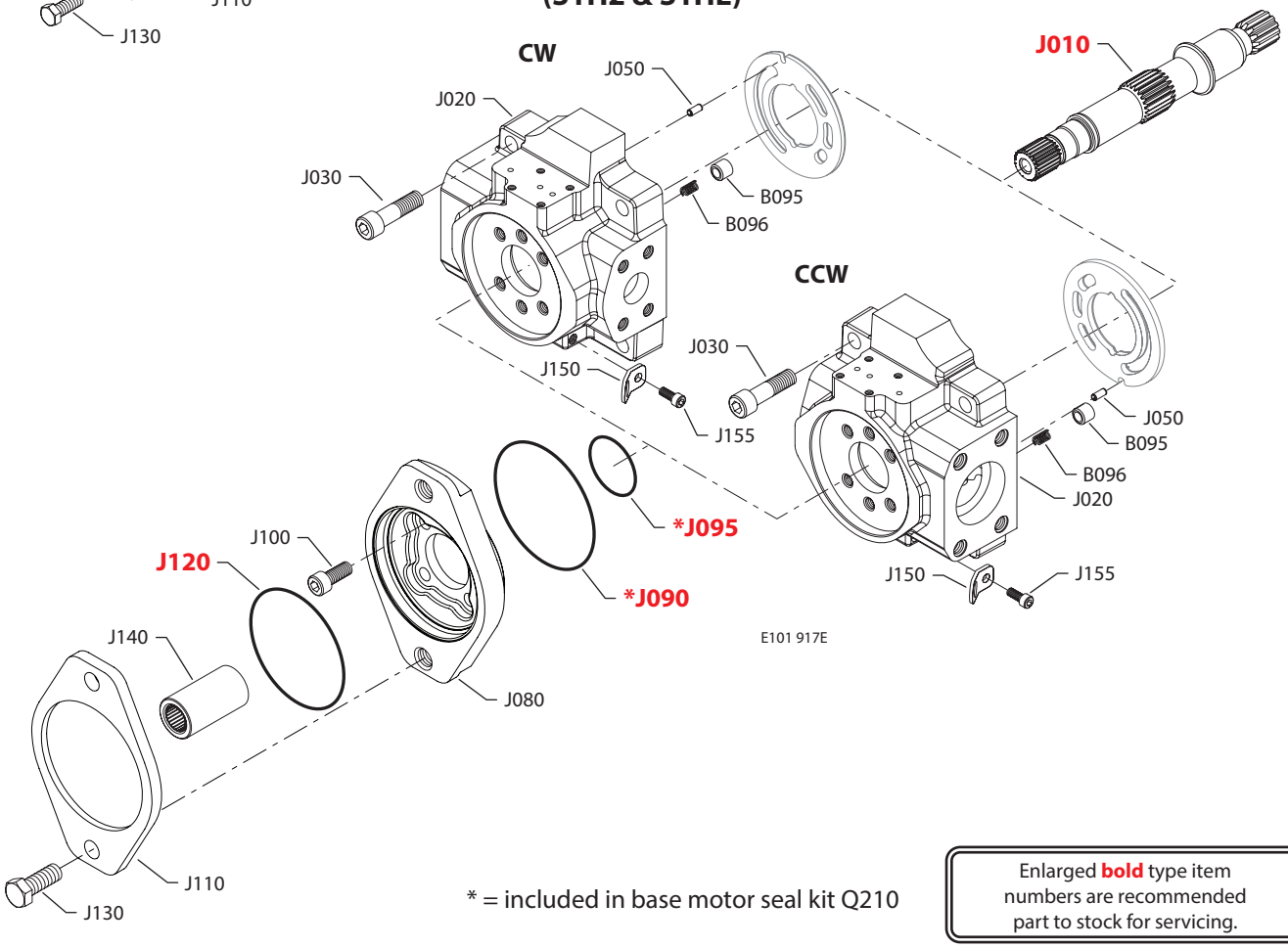

* = included in base motor seal kit Q210

Enlarged **bold** type item numbers are recommended part to stock for servicing.

Shaft, auxiliary flange and end cap

Shaft/auxiliary flange/end cap

Order code	Item	Date begin	Date end	Part number	Part name	Qty. per model/kit
S1GX	B095	12-35		1700256	Check valve poppet	1
	B096	12-35		1700257	Check valve spring	1
	J010	12-35		1700955	Shaft, 14 tooth with auxiliary drive	1
	J020	12-35		11117044	End cap, CCW, radial ports, gen. 2, JRL	1
	J030	12-35		5000181 (9007314-1210)	Screw	4
	J050	12-35		9004700-1907	Pin	1
	J080	12-35		4570430	Flange adapter, A pad, metric	1
	J090	12-35		5000099 (9004100-1550)	O-ring	1
	J095	12-35		545434 (9004100-0420)	O-ring	1
	J100	12-35		5000489	Screw	4
	J110	12-35		4460586	Cover plate	1
	J120	12-35		4800482	A pad seal	1
	J130	12-35		5000622	Screw	2
	J140	12-35		1701186	Coupling, 11 tooth	1
	J150	12-35		4800754	Lifting bracket	1
	J155	12-35		9007315-0604	Screw	1
S1H2	B095	10-16	15-39	1700256	Check valve poppet	1
	B096	10-16	15-39	1700257	Check valve spring	1
	J010	10-16	15-39	1700955	Shaft, 14 tooth with auxiliary drive	1
	J020	10-16	15-39	11077600	End cap, CW, radial ports, gen. 1, JRR (SB-2010-002)	1
	J030	10-16	15-39	5000181 (9007314-1210)	Screw	4
	J050	10-16	15-39	9004700-1907	Pin	1
	J080	10-16	15-39	4570210	Flange adapter, B pad	1
	J090	10-16	15-39	5000099 (9004100-1550)	O-ring	1
	J095	10-16	15-39	545434 (9004100-0420)	O-ring	1
	J100	10-16	15-39	5000489	Screw	4
	J110	10-16	15-39	4460370	Cover plate	1
	J120	10-16	15-39	9004104-0440	O-ring	1
	J130	10-16	15-39	9007200-5021	Screw,	2
	J140	10-16	15-39	1701188	Coupling, 15 tooth	1
	J150	10-16	15-39	4800754	Lifting bracket	1
	J155	10-16	15-39	9007315-0604	Screw	1
S1HE	B095	03-23		1700256	Check valve poppet	1
	B096	03-23		1700257	Check valve spring	1
	J010	03-23		1700955	Shaft, 14 tooth with auxiliary drive	1
	J020	03-23		11092368	End cap, CW, radial ports, gen. 2, JRR (SB-2010-002)	1
	J020	03-23		11086934	End cap, CCW, radial ports, gen. 2, JRL (SB-2010-002)	1
	J030	03-23		5000181 (9007314-1210)	Screw	4
	J050	03-23		9004700-1907	Pin	1
	J080	03-23		4570210	Flange adapter, B pad	1
	J090	03-23		5000099 (9004100-1550)	O-ring	1
	J095	03-23		545434 (9004100-0420)	O-ring	1
	J100	03-23		5000489	Screw	4
	J110	03-23		4460370	Cover plate	1
	J120	03-23		9004104-0440	O-ring	1
	J130	03-23		9007200-5021	Screw,	2
	J140	03-23		1701188	Coupling, 15 tooth	1
	J150	03-23		4800754	Lifting bracket	1
	J155	03-23		9007315-0604	Screw	1

Shaft, auxiliary flange and end cap

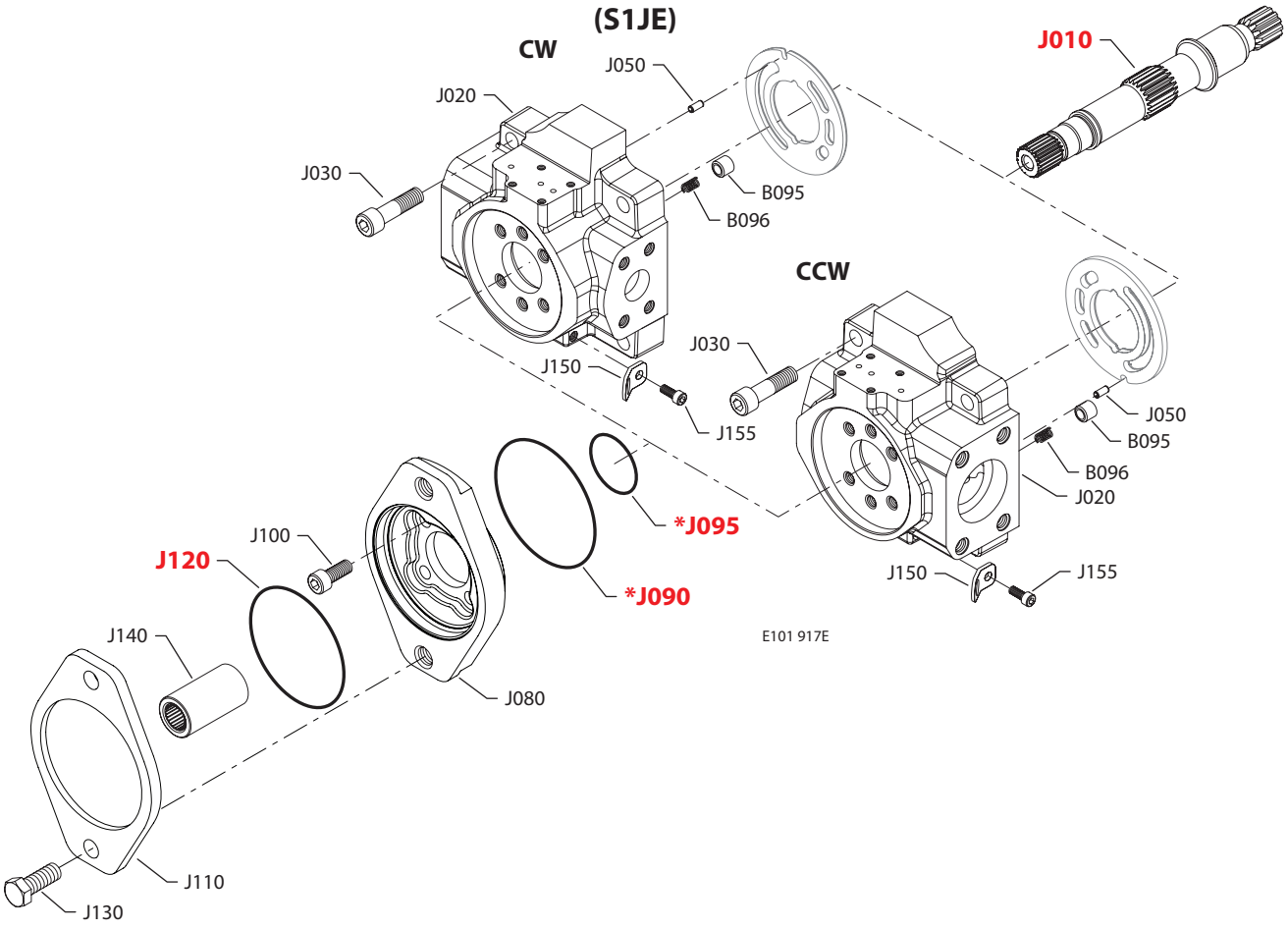

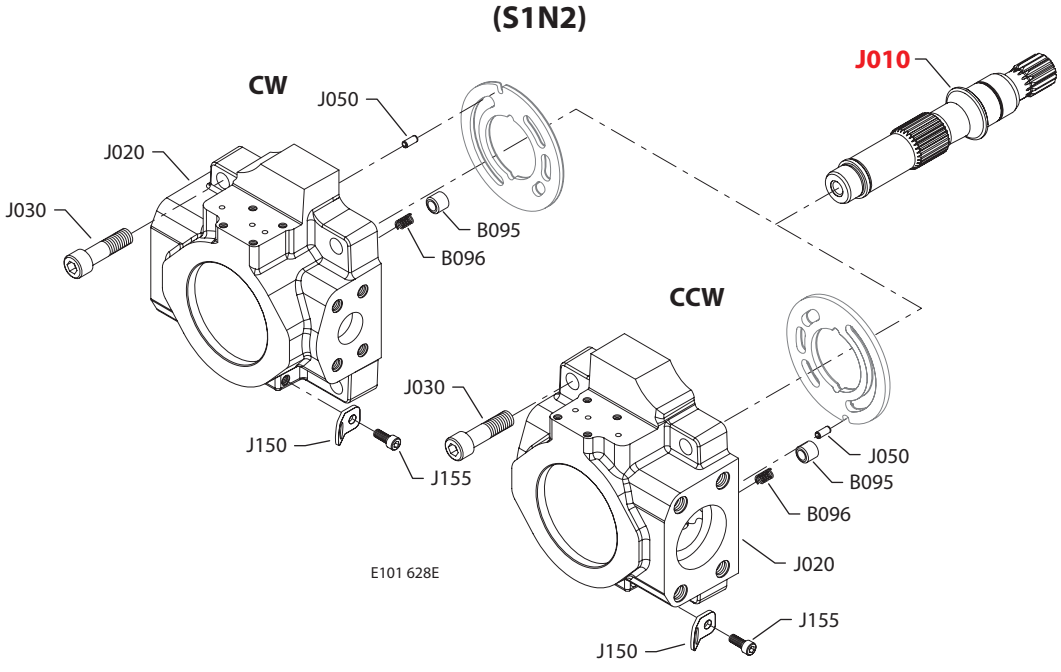

* = included in base motor seal kit Q210

Enlarged **bold** type item numbers are recommended part to stock for servicing.

Shaft, auxiliary flange and end cap

Shaft/auxiliary flange/end cap

Order code	Item	Date begin	Date end	Part number	Part name	Qty. per model/kit
S1JE	B095	03-23		1700256	Check valve poppet	1
	B096	03-23		1700257	Check valve spring	1
	J010	03-23		1700955	Shaft, 14 tooth with auxiliary drive	1
	J020	03-23		11092368	End cap, CW, radial ports, gen. 2, JRR (SB-2010-002)	1
	J020	03-23		11086934	End cap, CCW, radial ports, gen. 2, JRL (SB-2010-002)	1
	J030	03-23		5000181 (9007314-1210)	Screw	4
	J050	03-23		9004700-1907	Pin	1
	J080	03-23		4570210	Flange adapter, B pad	1
	J090	03-23		5000099 (9004100-1550)	O-ring	1
	J095	03-23		545434 (9004100-0420)	O-ring	1
	J100	03-23		5000489	Screw	4
	J110	03-23		4460370	Cover plate	1
	J120	03-23		9004104-0440	O-ring	1
	J130	03-23		9007200-5021	Screw,	2
	J140	03-23		1701187	Coupling, 13 tooth	1
	J150	03-23		4800754	Lifting bracket	1
	J155	03-23		9007315-0604	Screw	1
S1N2	B095	03-23	15-39	1700256	Check valve poppet	1
	B096	03-23	15-39	1700257	Check valve spring	1
	J010	03-23	15-39	1700956	Shaft, 14 tooth without auxiliary drive	1
	J020	03-23	15-39	11068228	End cap, CW, radial ports, gen. 1, JRR (SB-2010-002)	1
	J020	03-23	15-39	11077605	End cap, CCW, radial ports, gen. 1, JRL (SB-2010-002)	1
	J030	03-23	15-39	5000181 (9007314-1210)	Screw	4
	J050	03-23	15-39	9004700-1907	Pin	1
	J150	03-23	15-39	4800754	Lifting bracket	1
	J155	03-23	15-39	9007315-0604	Screw	1

Shaft, auxiliary flange and end cap

(S1N3)

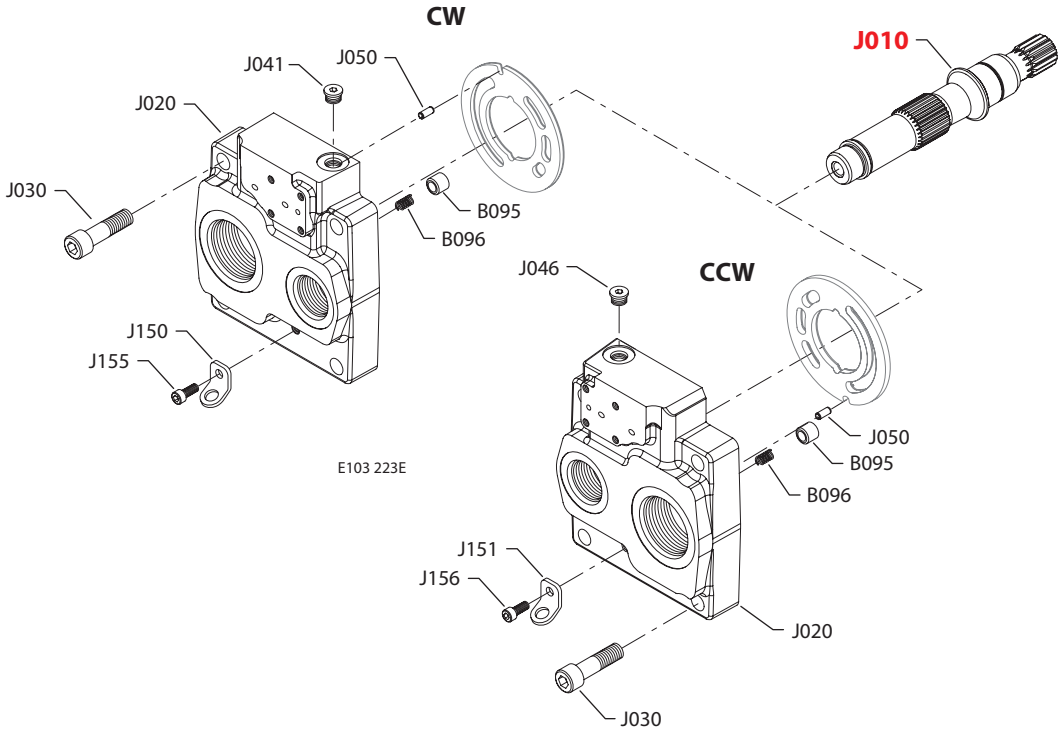

(S1N4)

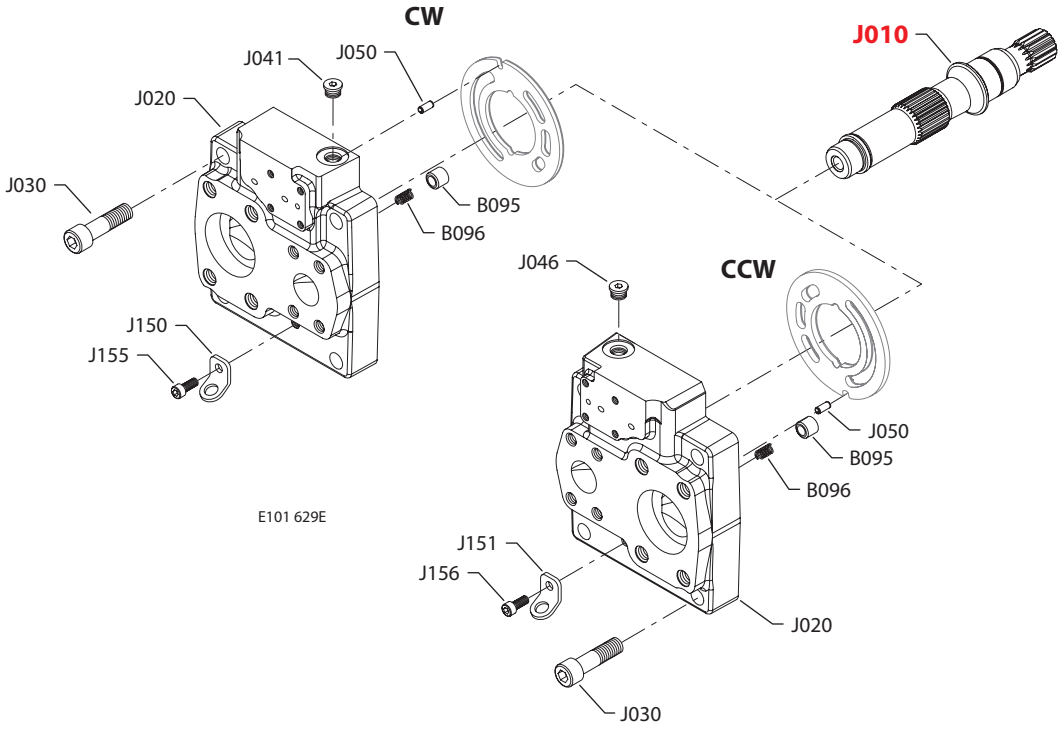

* = included in base motor seal kit Q210

Enlarged **bold** type item numbers are recommended part to stock for servicing.

Shaft, auxiliary flange and end cap

Shaft/auxiliary flange/end cap

Order code	Item	Date begin	Date end	Part number	Part name	Qty. per model/kit
S1N3	B095	03-23	15-36	1700256	Check valve poppet	1
	B096	03-23	15-36	1700257	Check valve spring	1
	J010	03-23	15-36	1700956	Shaft, 14 tooth without auxiliary drive	1
	J020	03-23	15-36	11077590	End cap, CW, axial ports, gen. 1, JRR (SB-2010-002)	1
	J020	03-23	15-36	11077594	End cap, CCW, axial ports, gen. 1, JRL (SB-2010-002)	1
	J030	03-23	15-36	5000181 (9007314-1210)	Screw	4
	J041	03-23	15-36	140644 (9005110-5600)	Plug assembly, JRR	1
	J046	03-23	15-36	140644 (9005110-5600)	Plug assembly, JRL	1
	J050	03-23	15-36	9004700-1907	Pin	1
	J150	03-23	15-36	4800754	Lifting bracket, JRR	1
	J151	03-23	15-36	4800754	Lifting bracket, JRL	1
	J155	03-23	15-36	9007315-0604	Screw, JRR	1
	J156	03-23	15-36	9007315-0604	Screw, JRL	1
S1N4	B095	03-23	15-38	1700256	Check valve poppet	1
	B096	03-23	15-38	1700257	Check valve spring	1
	J010	03-23	15-38	1700956	Shaft, 14 tooth without auxiliary drive	1
	J020	03-23	15-38	11077589	End cap, CW, axial ports, gen. 1, JRR (SB-2010-002)	1
	J020	03-23	15-38	11077593	End cap, CCW, axial ports, gen. 1, JRL (SB-2010-002)	1
	J030	03-23	15-38	5000181 (9007314-1210)	Screw	4
	J041	03-23	15-38	140644 (9005110-5600)	Plug assembly, JRR	1
	J046	03-23	15-38	140644 (9005110-5600)	Plug assembly, JRL	1
	J050	03-23	15-38	9004700-1907	Pin	1
	J150	03-23	15-38	4800754	Lifting bracket, JRR	1
	J151	03-23	15-38	4800754	Lifting bracket, JRL	1
	J155	03-23	15-38	9007315-0604	Screw, JRR	1
	J156	03-23	15-38	9007315-0604	Screw, JRL	1

Shaft, auxiliary flange and end cap

(S1N6 & S1NE)

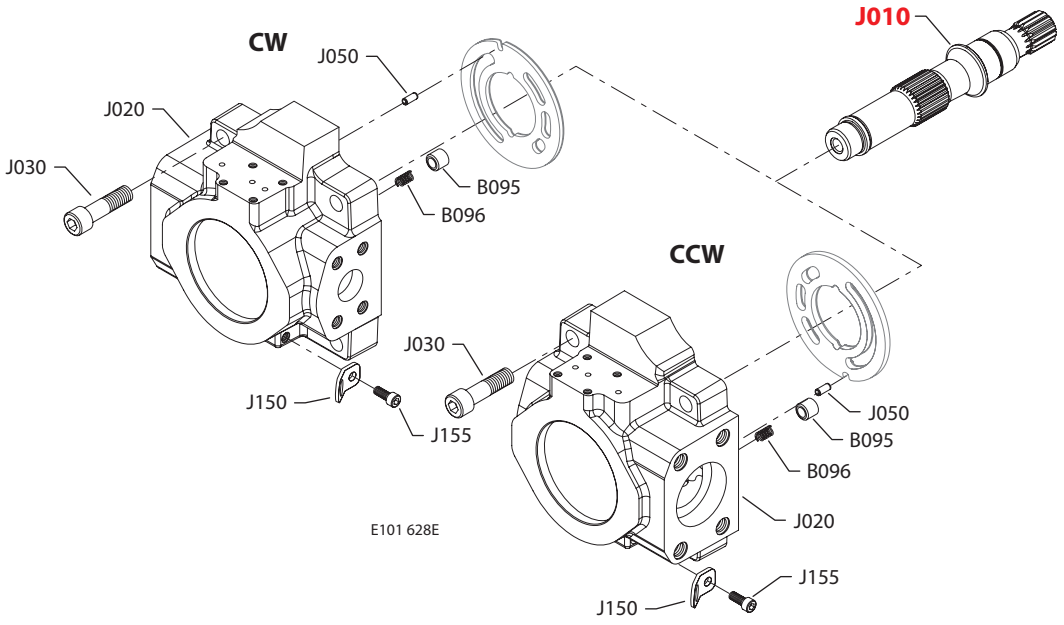

(S1N9)

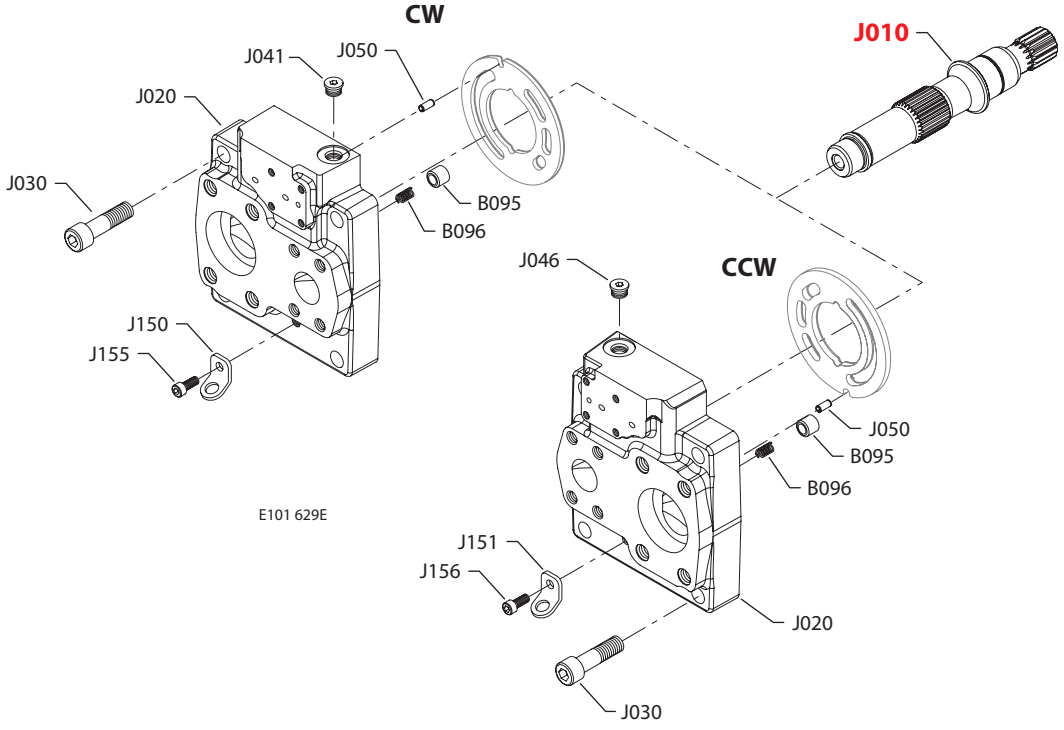

* = included in base motor seal kit Q210

Enlarged **bold** type item numbers are recommended part to stock for servicing.

Shaft, auxiliary flange and end cap

Shaft/auxiliary flange/end cap

Order code	Item	Date begin	Date end	Part number	Part name	Qty. per model/kit
S1N6	B095	03-23		1700256	Check valve poppet	1
	B096	03-23		1700257	Check valve spring	1
	J010	03-23		1700956	Shaft, 14 tooth without auxiliary drive	1
	J020	03-23		11085474	End cap, CW, radial ports, gen. 2, JRR (SB-2010-002)	1
	J030	03-23		5000181 (9007314-1210)	Screw	4
	J050	03-23		9004700-1907	Pin	1
	J150	03-23		4800754	Lifting bracket	1
	J155	03-23		9007315-0604	Screw	1
S1N9	B095	11-38		1700256	Check valve poppet	1
	B096	11-38		1700257	Check valve spring	1
	J010	11-38		1700956	Shaft, 14 tooth without auxiliary drive	1
	J020	11-38		11095294	End cap, CW, axial ports, gen. 2, JRR	1
	J020	11-38		11095297	End cap, CCW, axial ports, gen. 2, JRL	1
	J030	11-38		5000181 (9007314-1210)	Screw	4
	J041	11-38		140644 (9005110-5600)	Plug assembly, JRR	1
	J046	11-38		140644 (9005110-5600)	Plug assembly, JRL	1
	J050	11-38		9004700-1907	Pin	1
	J150	11-38		4800754	Lifting bracket, JRR	1
	J151	11-38		4800754	Lifting bracket, JRL	1
	J155	11-38		9007315-0604	Screw, JRR	1
	J156	11-38		9007315-0604	Screw, JRL	1
S1NE	B095	11-39		1700256	Check valve poppet	1
	B096	11-39		1700257	Check valve spring	1
	J010	11-39		1700956	Shaft, 14 tooth without auxiliary drive	1
	J020	11-39		11095323	End cap, CW, radial ports, gen. 2, JRR	1
	J020	11-39		11082641	End cap, CCW, radial ports, gen. 2, JRL	1
	J030	11-39		5000181 (9007314-1210)	Screw	4
	J050	11-39		9004700-1907	Pin	1
	J150	11-39		4800754	Lifting bracket	1
	J155	11-39		9007315-0604	Screw	1

Shaft, auxiliary flange and end cap

(S1NH)

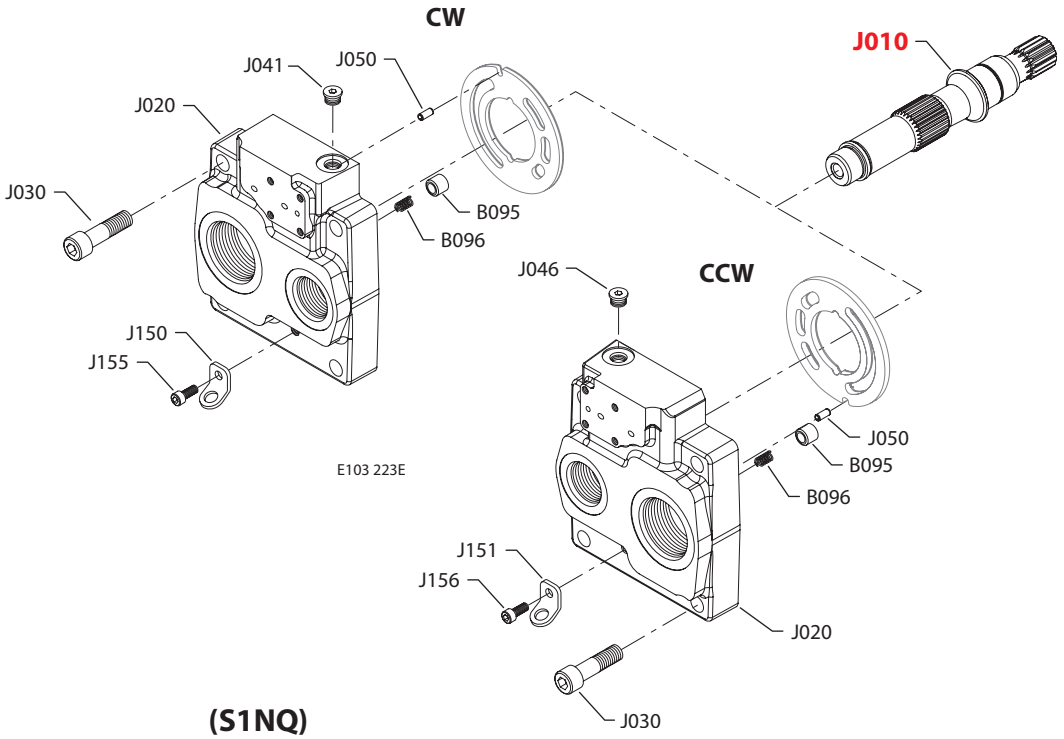

(S1NQ)

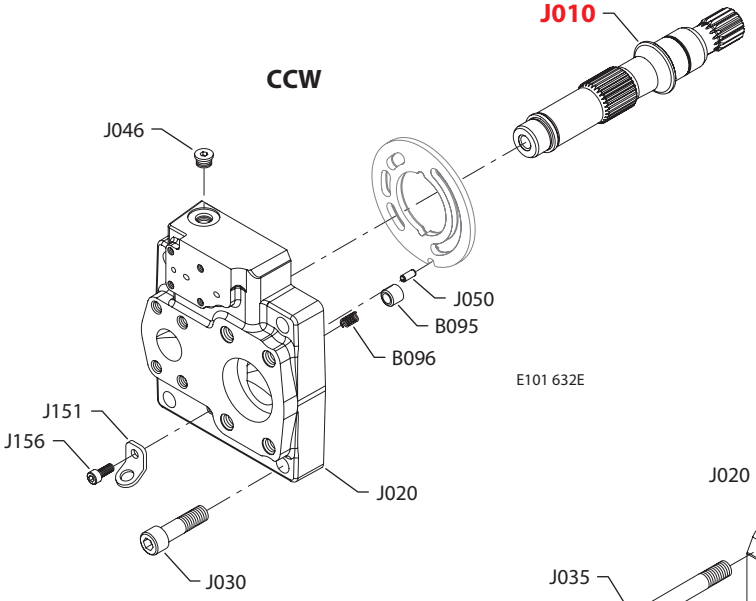

(S1NS & S1NT)

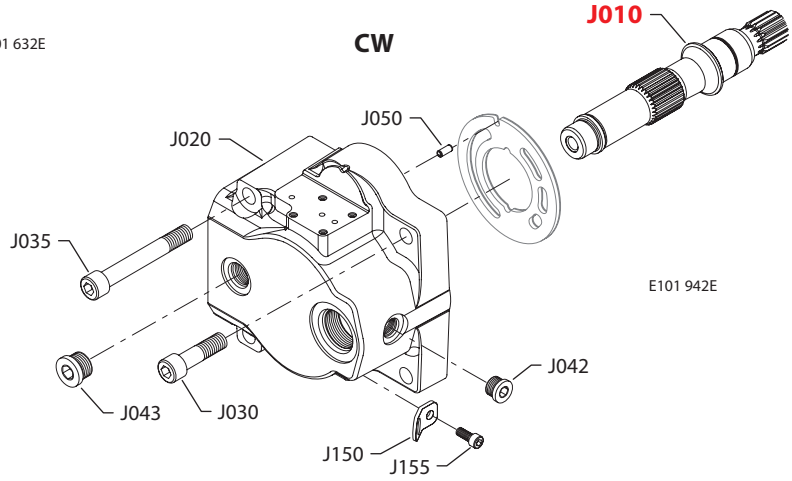

* = included in base motor seal kit Q210

Enlarged **bold** type item numbers are recommended part to stock for servicing.

Shaft, auxiliary flange and end cap

Shaft/auxiliary flange/end cap

Order code	Item	Date begin	Date end	Part number	Part name	Qty. per model/kit
S1NH	B095	11-47		1700256	Check valve poppet	1
	B096	11-47		1700257	Check valve spring	1
	J010	11-47		1700956	Shaft, 14 tooth without auxiliary drive	1
	J020	11-47		11095295	End cap, CW, radial ports, gen. 2, JRR	1
	J020	11-47		11095298	End cap, CCW, radial ports, gen. 2, JRL	1
	J030	11-47		5000181 (9007314-1210)	Screw	4
	J041	11-47		140644 (9005110-5600)	Plug assembly, JRR	1
	J046	11-47		140644 (9005110-5600)	Plug assembly, JRL	1
	J050	11-47		9004700-1907	Pin	1
	J150	11-47		4800754	Lifting bracket	1
	J151	11-47		4800754	Lifting bracket	1
	J155	11-47		9007315-0604	Screw	1
	J156	11-47		9007315-0604	Screw	1
S1NQ	B095	03-23		1700256	Check valve poppet	1
	B096	03-23		1700257	Check valve spring	1
	J010	03-23		1700956	Shaft, 14 tooth without auxiliary drive	1
	J020	03-23		11127635	End cap, CCW, axial ports, gen. 2, JRR (SB-2010-002)	1
	J030	03-23		5000181 (9007314-1210)	Screw	2
	J046	03-23		140644	Plug assembly	1
	J050	03-23		9004700-1907	Pin	1
	J151	03-23		4800754	Lifting bracket	1
	J156	03-23		9007315-0604	Screw	1
S1NS	J010	03-23	15-36	1700956	Shaft, 14 tooth without auxiliary drive	1
	J020	03-23	15-36	11077592	End cap, CW, special, gen. 1 JRR (SB-2010-002)	1
	J030	03-23	15-36	5000181 (9007314-1210)	Screw	2
	J035	03-23	15-36	5000705	Screw	2
	J042	03-23	15-36	140644 (9005110-5600)	Plug assembly	1
	J043	03-23	15-36	9005110-7500	Plug assembly	1
	J050	03-23	15-36	9004700-1907	Pin	1
	J150	03-23	15-36	4800754	Lifting bracket	1
	J155	03-23	15-36	9007315-0604	Screw	1
S1NT	J010	03-23		1700956	Shaft, 14 tooth without auxiliary drive	1
	J020	03-23		11099425	End cap, CW, special, gen. 2, JRR	1
	J030	03-23		5000181 (9007314-1210)	Screw	2
	J035	03-23		5000705	Screw	2
	J042	03-23		140644 (9005110-5600)	Plug assembly	1
	J043	03-23		9005110-7500	Plug assembly	1
	J050	03-23		9004700-1907	Pin	1
	J150	03-23		4800754	Lifting bracket	1
	J155	03-23		9007315-0604	Screw	1

Shaft, auxiliary flange and end cap

(S1NV)

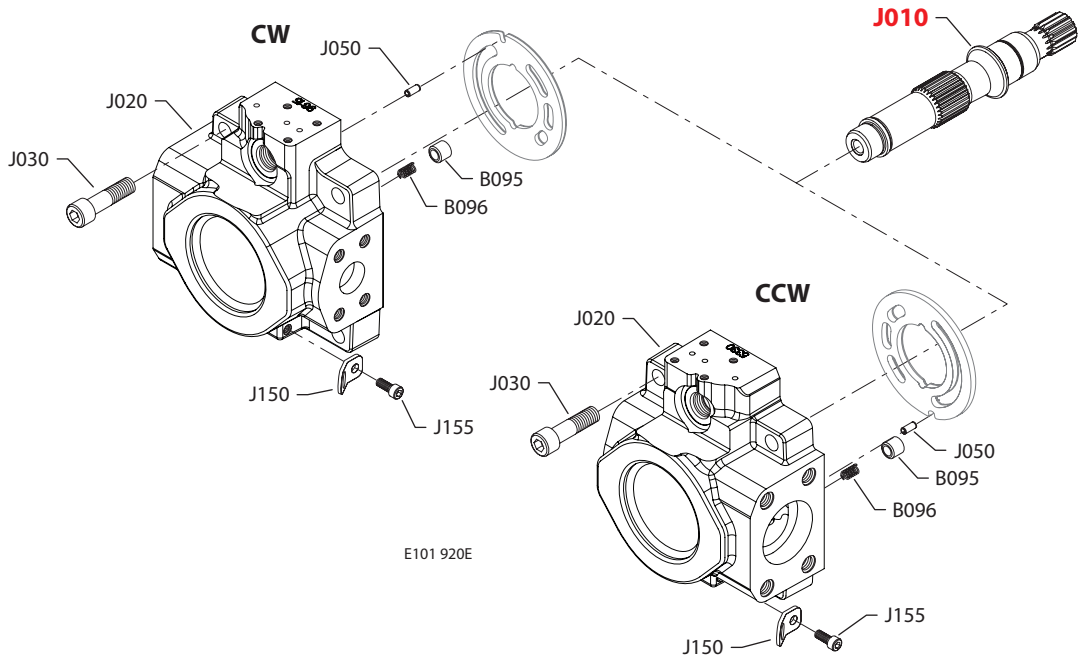

(S1NW)

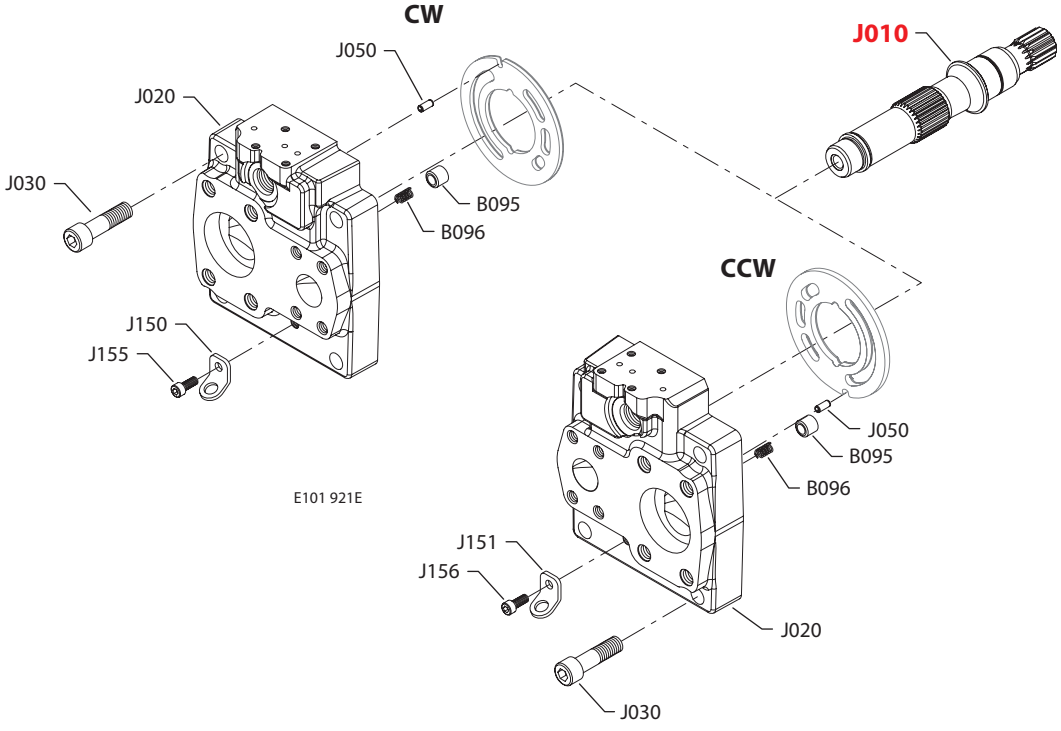

* = included in base motor seal kit Q210

Enlarged **bold** type item numbers are recommended part to stock for servicing.

Shaft, auxiliary flange and end cap

Shaft/auxiliary flange/end cap

Order code	Item	Date begin	Date end	Part number	Part name	Qty. per model/kit
S1NV	B095	11-40		1700256	Check valve poppet	1
	B096	11-40		1700257	Check valve spring	1
	J010	11-40		1700956	Shaft, 14 tooth without auxiliary drive	1
	J020	11-40		11099615	End cap, CW, radial ports, DL, gen. 2, JRR	1
	J020	11-40		11095330	End cap, CCW, radial ports, DL, gen. 2, JRL	1
	J030	11-40		5000181 (9007314-1210)	Screw	4
	J050	11-40		9004700-1907	Pin	1
	J150	11-40		4800754	Lifting bracket	1
	J155	11-40		9007315-0604	Screw	1
S1NW	B095	03-23	15-36	1700256	Check valve poppet	1
	B096	03-23	15-36	1700257	Check valve spring	1
	J010	03-23	15-36	1700956	Shaft, 14 tooth without auxiliary drive	1
	J020	03-23	15-36	11077591	End cap, CW, axial ports, DL, gen. 1, JRR (SB-2010-002)	1
	J020	03-23	15-36	11077595	End cap, CCW, axial ports, DL, gen. 1, JRL (SB-2010-002)	1
	J030	03-23	15-36	9007314-1210	Screw	4
	J050	03-23	15-36	9004700-1907	Pin	1
	J150	03-23	15-36	4800754	Lifting bracket, JRR	1
	J151	03-23	15-36	4800754	Lifting bracket, JRL	1
	J155	03-23	15-36	9007315-0604	Screw, JRR	1
	J156	03-23	15-36	9007315-0604	Screw, JRL	1

Shaft, auxiliary flange and end cap

(S1NX)

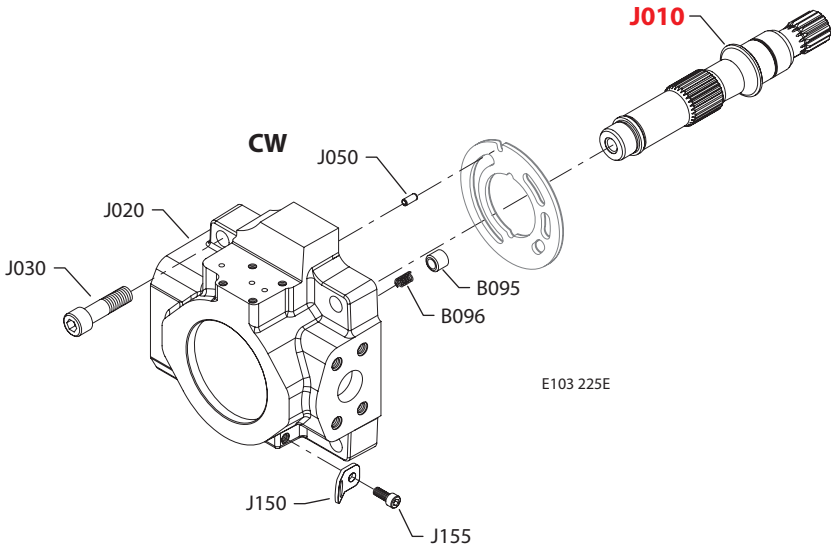

(S1NZ)

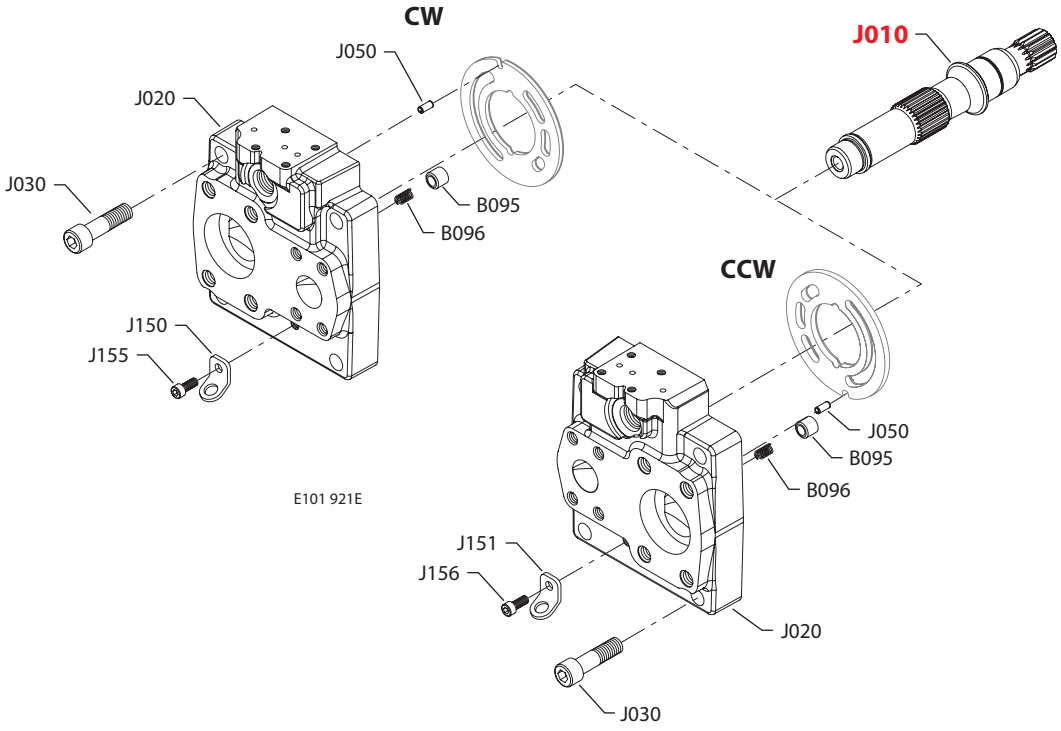

* = included in base motor seal kit Q210

Enlarged **bold** type item numbers are recommended part to stock for servicing.

Shaft, auxiliary flange and end cap

Shaft/auxiliary flange/end cap

Order code	Item	Date begin	Date end	Part number	Part name	Qty. per model/kit
S1NX	B095	11-40		1700256	Check valve poppet	1
	B096	11-40		1700257	Check valve spring	1
	J010	11-40		1700956	Shaft, 14 tooth without auxiliary drive	1
	J020	11-40		11106865	End cap, CW, radial ports, gen. 2, JRR	1
	J030	11-40		5000181 (9007314-1210)	Screw	4
	J050	11-40		9004700-1907	Pin	1
	J150	11-40		4800754	Lifting bracket	1
	J155	11-40		9007315-0604	Screw	1
S1NZ	B095	03-23		1700256	Check valve poppet	1
	B096	03-23		1700257	Check valve spring	1
	J010	03-23		1700956	Shaft, 14 tooth without auxiliary drive	1
	J020	03-23		11095296	End cap, CW, axial ports, DL, gen. 2, JRR	1
	J020	03-23		11095299	End cap, CCW, axial ports, DL, gen. 2, JRL	1
	J030	03-23		5000181 (9007314-1210)	Screw	4
	J050	03-23		9004700-1907	Pin	1
	J150	03-23		4800754	Lifting bracket, JRR	1
	J151	03-23		4800754	Lifting bracket, JRL	1
	J155	03-23		9007315-0604	Screw, JRR	1
	J156	03-23		9007315-0604	Screw, JRL	1

Shaft, auxiliary flange and end cap

(S1R2 & S1RE)

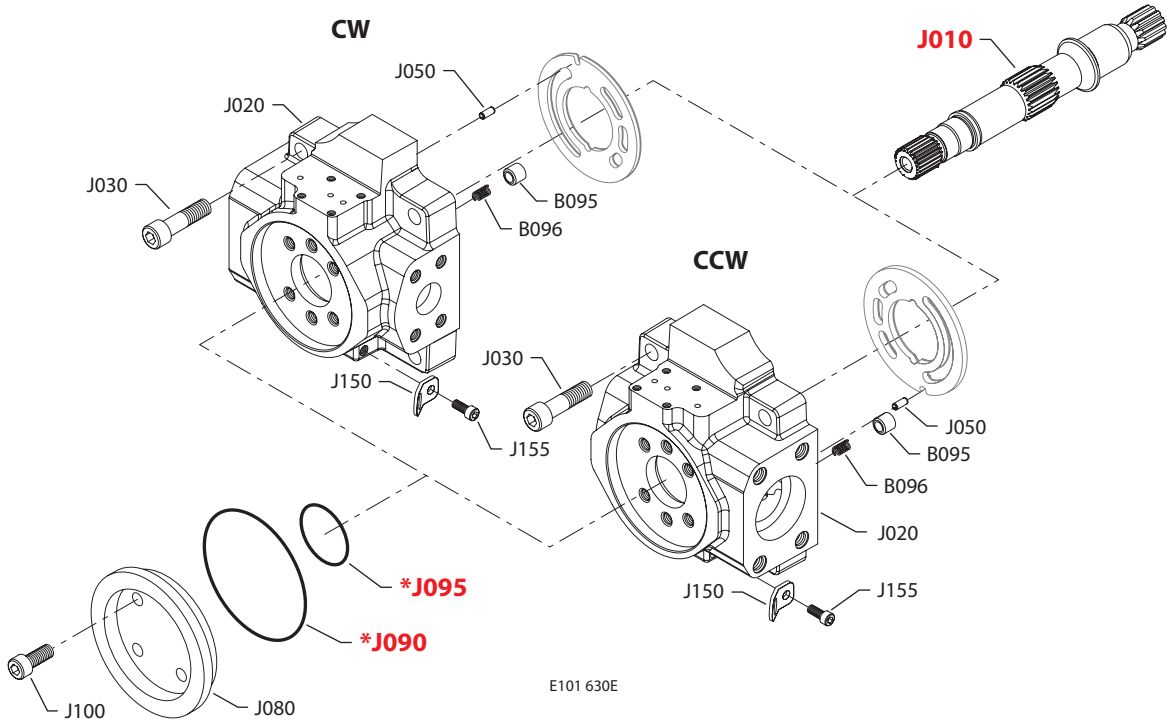

* = included in base motor seal kit Q210

Enlarged **bold** type item numbers are recommended part to stock for servicing.

Shaft, auxiliary flange and end cap

Shaft/auxiliary flange/end cap

Order code	Item	Date begin	Date end	Part number	Part name	Qty. per model/kit
S1R2	B095	03-23	15-39	1700256	Check valve poppet	1
	B096	03-23	15-39	1700257	Check valve spring	1
	J010	03-23	15-39	1700955	Shaft, 14 tooth with auxiliary drive	1
	J020	03-23	15-39	11077600	End cap, CW, radial ports, gen. 1, JRR (SB-2010-002)	1
	J020	03-23	15-39	11077606	End cap, CCW, radial ports, gen. 1, JRL (SB-2010-002)	1
	J030	03-23	15-39	5000181 (9007314-1210)	Screw	4
	J050	03-23	15-39	9004700-1907	Pin	1
	J080	03-23	15-39	4570179	Running cover	1
	J090	03-23	15-39	5000099 (9004100-1550)	O-ring	1
	J095	03-23	15-39	545434 (9004104-0310)	O-ring	1
	J100	03-23	15-39	5000489	Screw	4
	J150	03-23	15-39	4800754	Lifting bracket	1
	J155	03-23	15-39	9007315-0604	Screw	1
S1RE	B095	11-45		1700256	Check valve poppet	1
	B096	11-45		1700257	Check valve spring	1
	J010	11-45		1700955	Shaft, 14 tooth with auxiliary drive	1
	J020	11-45		11092368	End cap, CW, radial ports, gen. 2, JRR	1
	J020	11-45		11086934	End cap, CCW, radial ports, gen. 2, JRL	1
	J030	11-45		5000181 (9007314-1210)	Screw	4
	J050	11-45		9004700-1907	Pin	1
	J080	11-45		4570179	Running cover	1
	J090	11-45		5000099 (9004100-1550)	O-ring	1
	J095	11-45		545434 (9004104-0310)	O-ring	1
	J100	11-45		5000489	Screw	4
	J150	11-45		4800754	Lifting bracket	1
	J155	11-45		9007315-0604	Screw	1

Shaft, auxiliary flange and end cap

(S1RF & S1RV)

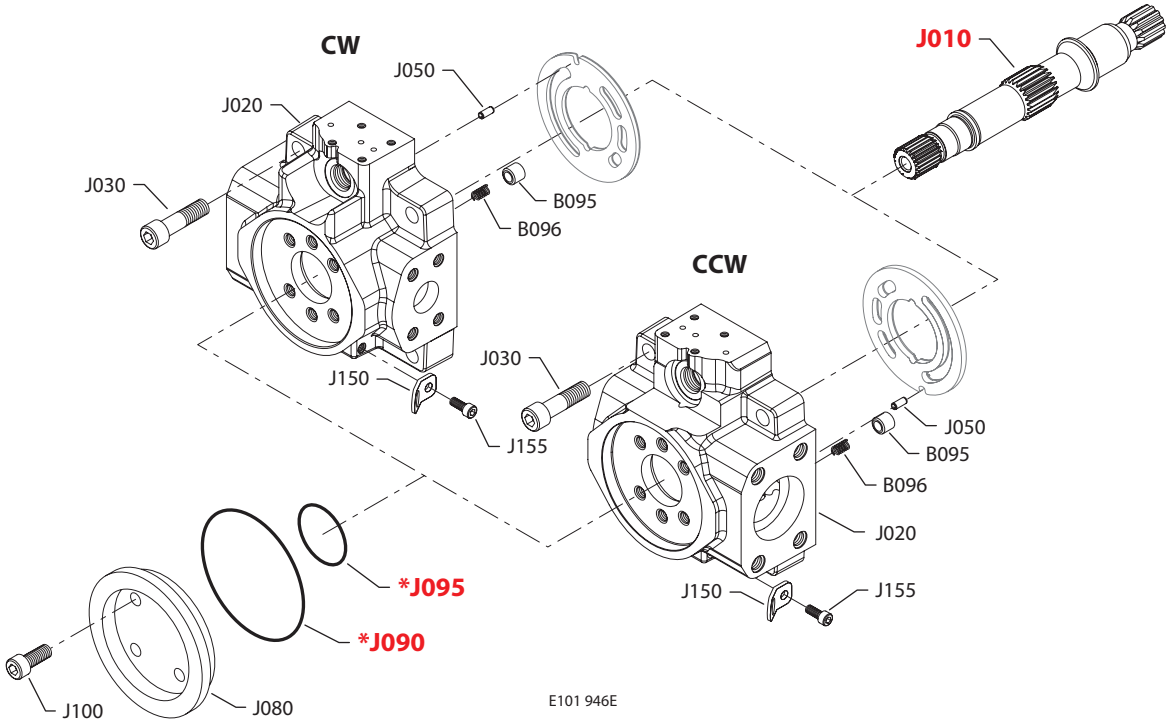

* = included in base motor seal kit Q210

Enlarged **bold** type item numbers are recommended part to stock for servicing.

Shaft, auxiliary flange and end cap

Shaft/auxiliary flange/end cap

Order code	Item	Date begin	Date end	Part number	Part name	Qty. per model/kit
S1RF	B095	03-23		1700256	Check valve poppet	1
	B096	03-23		1700257	Check valve spring	1
	J010	03-23		1700955	Shaft, 14 tooth with auxiliary drive	1
	J020	03-23		11095327	End cap, CW, radial ports, DL, gen. 2, JRR (SB-2010-002)	1
	J020	03-23		11086919	End cap, CCW, radial ports, DL, gen. 2, JRL (SB-2010-002)	1
	J030	03-23		5000181 (9007314-1210)	Screw	4
	J050	03-23		9004700-1907	Pin	1
	J080	03-23		4570179	Running cover	1
	J090	03-23		5000099 (9004100-1550)	O-ring	1
	J095	03-23		545434 (9004104-0310)	O-ring	1
	J100	03-23		5000489	Screw	4
	J150	03-23		4800754	Lifting bracket	1
	J155	03-23		9007315-0604	Screw	1
S1RV	B095	11-45	15-37	1700256	Check valve poppet	1
	B096	11-45	15-37	1700257	Check valve spring	1
	J010	11-45	15-37	1700955	Shaft, 14 tooth with auxiliary drive	1
	J020	11-45	15-37	11077604	End cap, CW, radial ports, DL, gen. 1, JRR (SB-2010-002)	1
	J020	11-45	15-37	11077608	End cap, CCW, radial ports,DL, gen. 1, JRL (SB-2010-002)	1
	J030	11-45	15-37	5000181 (9007314-1210)	Screw	4
	J050	11-45	15-37	9004700-1907	Pin	1
	J080	11-45	15-37	4570179	Running cover	1
	J090	11-45	15-37	5000099 (9004100-1550)	O-ring	1
	J095	11-45	15-37	545434 (9004104-0310)	O-ring	1
	J100	11-45	15-37	5000489	Screw	4
	J150	11-45	15-37	4800754	Lifting bracket	1
	J155	11-45	15-37	9007315-0604	Screw	1

Shaft, auxiliary flange and end cap

(S1T2)

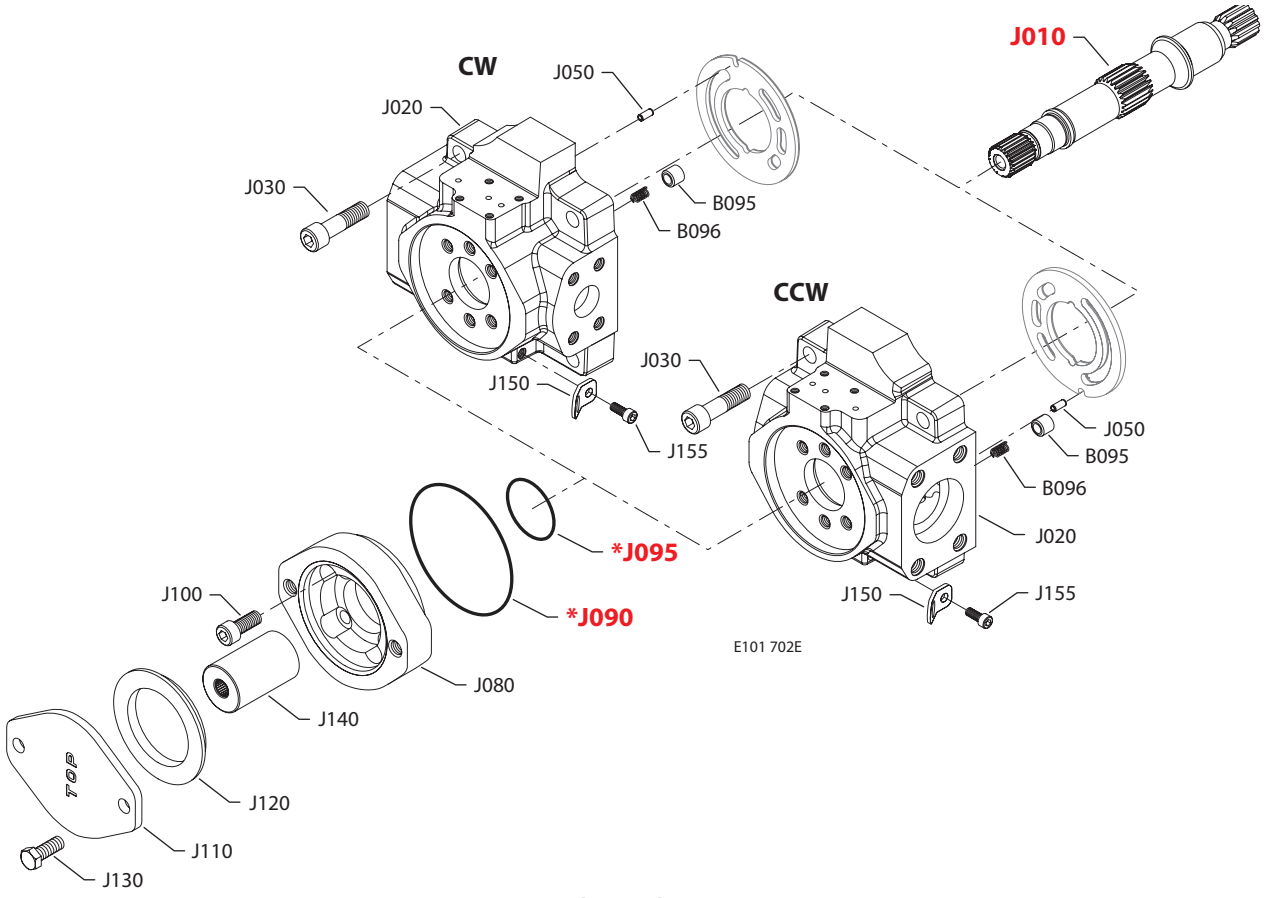

(S1TA)

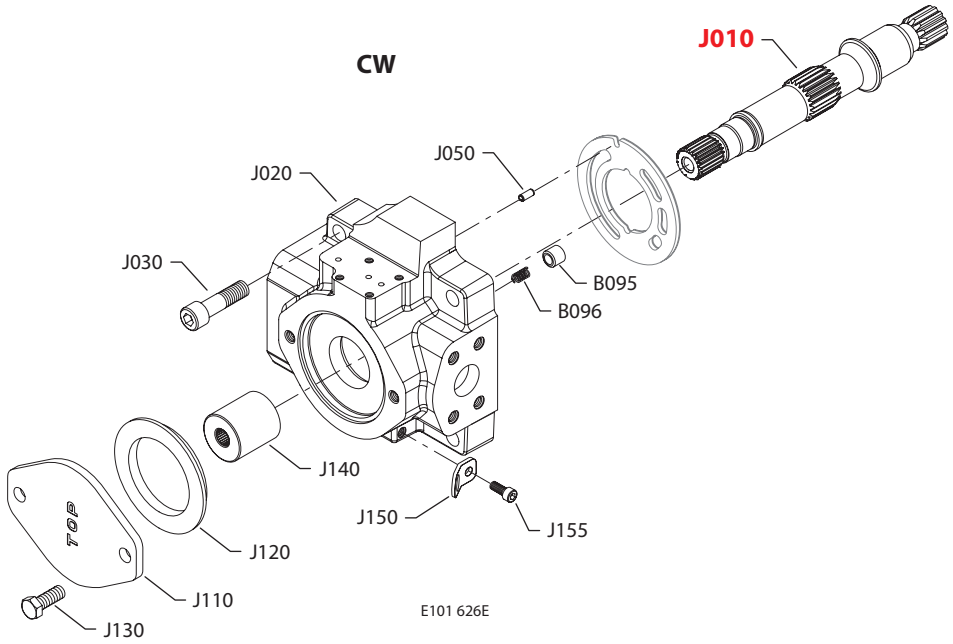

* = included in base motor seal kit Q210

Enlarged **bold** type item numbers are recommended part to stock for servicing.

Shaft, auxiliary flange and end cap

Shaft/auxiliary flange/end cap

Order code	Item	Date begin	Date end	Part number	Part name	Qty. per model/kit
S1T2	B095	03-23	15-39	1700256	Check valve poppet	1
	B096	03-23	15-39	1700257	Check valve spring	1
	J010	03-23	15-39	1700955	Shaft, 14 tooth with auxiliary drive	1
	J020	03-23	15-39	11077600	End cap, CW, radial ports, gen. 1, JRR (SB-2010-002)	1
	J020	03-23	15-39	11077606	End cap, CCW, radial ports, gen. 1, JRL (SB-2010-002)	1
	J030	03-23	15-39	5000181 (9007314-1210)	Screw	4
	J050	03-23	15-39	9004700-1907	Pin	1
	J080	03-23	15-39	4570289	Flange adapter, A pad	1
	J090	03-23	15-39	5000099 (9004100-1550)	O-ring	1
	J095	03-23	15-39	545434 (9004100-0420)	O-ring	1
	J100	03-23	15-39	5000489	Screw	4
	J110	03-23	15-39	4460586	Cover plate	1
	J120	03-23	15-39	4800482	A pad seal	1
	J130	03-23	15-39	9007200-3712	Screw	2
	J140	03-23	15-39	1701186	Coupling, 11 tooth	1
	J150	03-23	15-39	4800754	Lifting bracket	1
	J155	03-23	15-39	9007315-0604	Screw	1
S1TA	B095	03-23	15-39	1700256	Check valve poppet	1
	B096	03-23	15-39	1700257	Check valve spring	1
	J010	03-23	15-39	1700955	Shaft, 14 tooth with auxiliary drive	1
	J020	03-23	15-39	11077601	End cap, CW, radial ports, gen. 1, JRR (SB-2010-002)	1
	J030	03-23	15-39	5000181 (9007314-1210)	Screw	4
	J050	03-23	15-39	9004700-1907	Pin	1
	J110	03-23	15-39	4460586	Cover plate	1
	J120	03-23	15-39	4800482	A pad seal	1
	J130	03-23	15-39	9007200-3712	Screw	2
	J140	03-23	15-39	1700731	Coupling, 11 tooth	1
	J150	03-23	15-39	4800754	Lifting bracket	1
	J155	03-23	15-39	9007315-0604	Screw	1

Shaft, auxiliary flange and end cap

(S1TE)

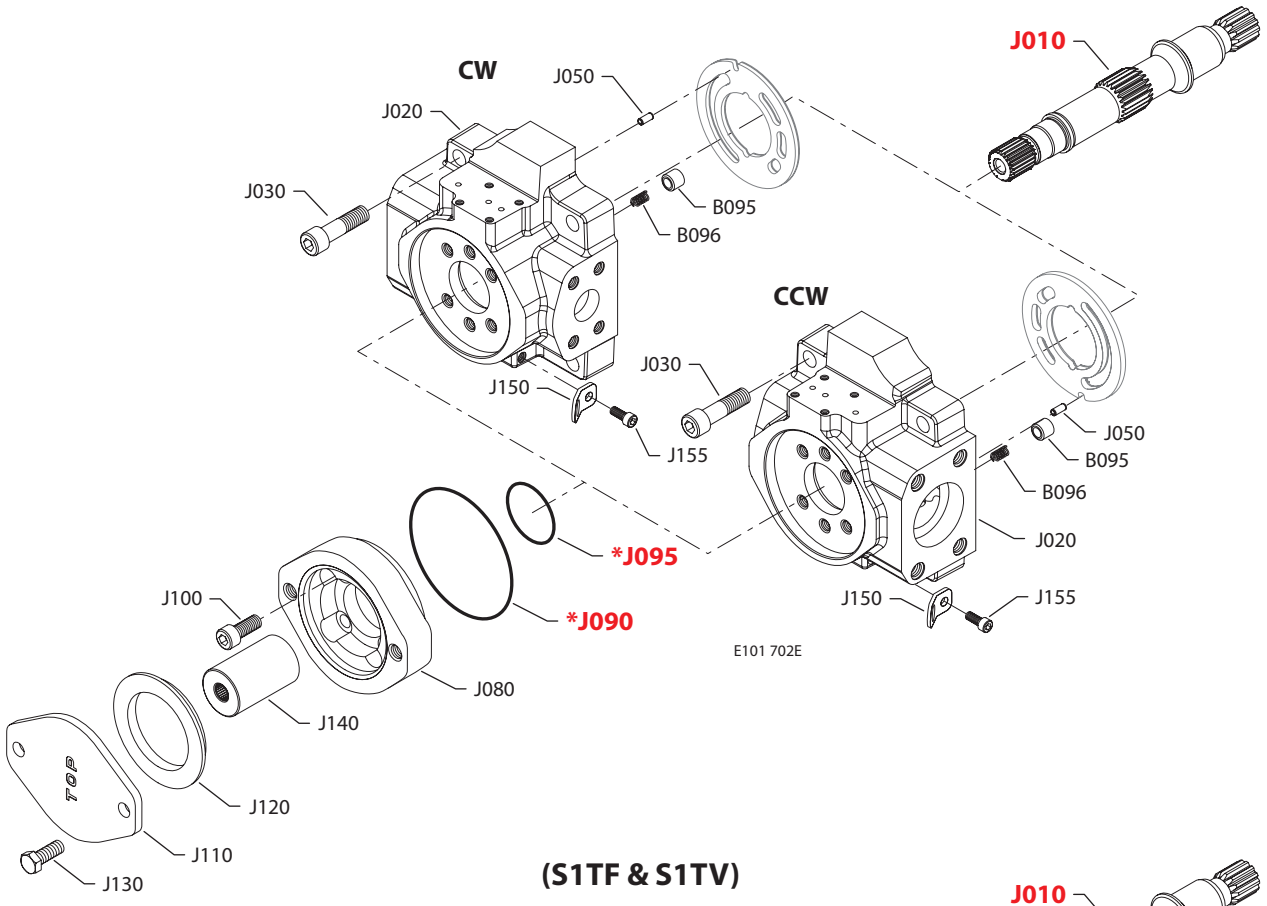

(S1TF & S1TV)

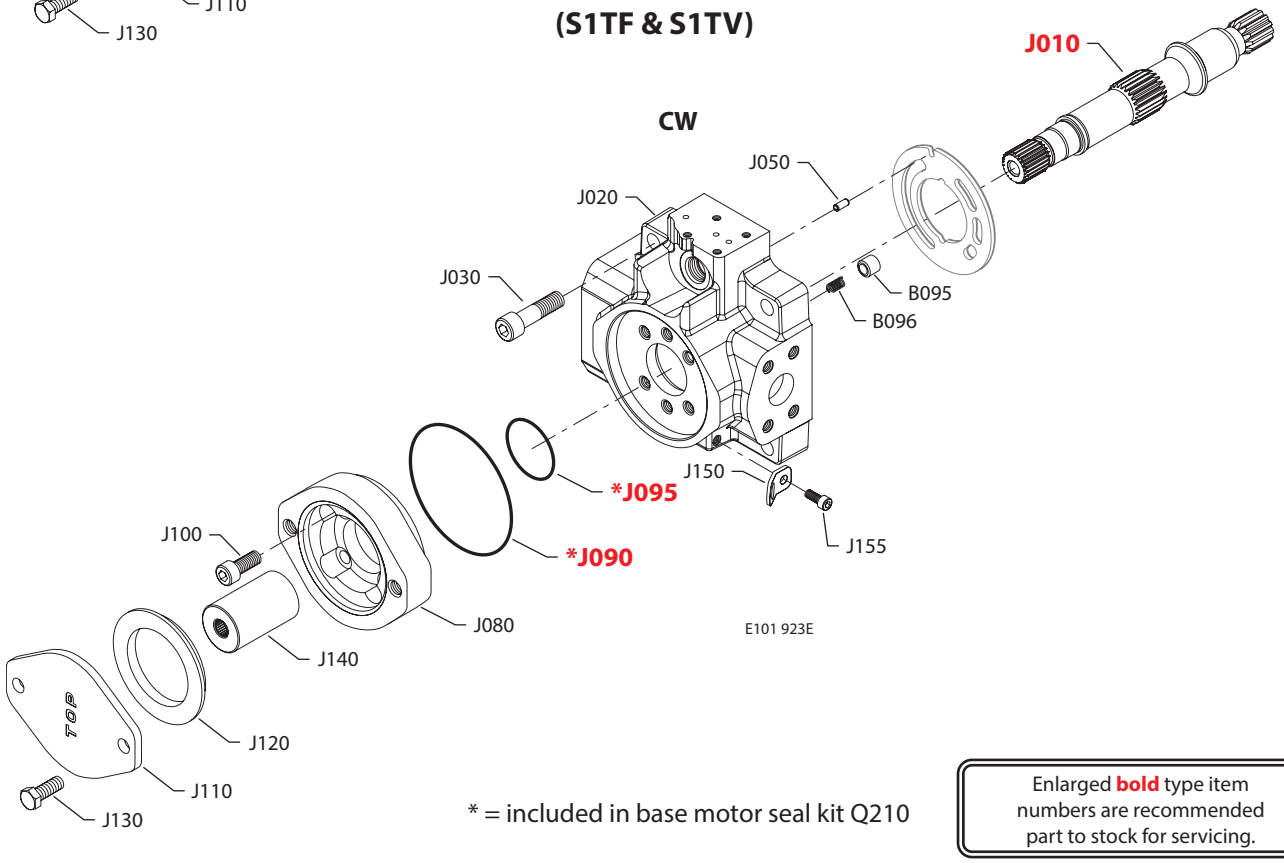

* = included in base motor seal kit Q210

Enlarged **bold** type item numbers are recommended part to stock for servicing.

Shaft, auxiliary flange and end cap

Shaft/auxiliary flange/end cap

Order code	Item	Date begin	Date end	Part number	Part name	Qty. per model/kit
S1TE	B095	11-45		1700256	Check valve poppet	1
	B096	11-45		1700257	Check valve spring	1
	J010	11-45		1700955	Shaft, 14 tooth with auxiliary drive	1
	J020	11-45		11092368	End cap, CW, radial ports, gen. 2, JRR	1
	J020	11-45		11086934	End cap, CCW, radial ports, gen. 2, JRL	1
	J030	11-45		5000181 (9007314-1210)	Screw	4
	J050	11-45		9004700-1907	Pin	1
	J080	11-45		4570289	Flange adapter, A pad	1
	J090	11-45		5000099 (9004100-1550)	O-ring	1
	J095	11-45		545434 (9004100-0420)	O-ring	1
	J100	11-45		5000489	Screw	4
	J110	11-45		4460586	Cover plate	1
	J120	11-45		4800482	A pad seal	1
	J130	11-45		9007200-3712	Screw	2
	J140	11-45		1701186	Coupling, 11 tooth	1
	J150	11-45		4800754	Lifting bracket	1
	J155	11-45		9007315-0604	Screw	1
S1TF	B095	11-47		1700256	Check valve poppet	1
	B096	11-47		1700257	Check valve spring	1
	J010	11-47		1700955	Shaft, 14 tooth with auxiliary drive	1
	J020	11-47		11095327	End cap, CW, radial ports, DL, gen. 2, JRR	1
	J030	11-47		5000181 (9007314-1210)	Screw	4
	J050	11-47		9004700-1907	Pin	1
	J080	11-47		4570289	Flange adapter, A pad	1
	J090	11-47		5000099 (9004100-1550)	O-ring	1
	J095	11-47		545434 (9004100-0420)	O-ring	1
	J100	11-47		5000489	Screw	4
	J110	11-47		4460586	Cover plate	1
	J120	11-47		4800482	A pad seal	1
	J130	11-47		9007200-3712	Screw	2
	J140	11-47		1701186	Coupling, 11 tooth	1
	J150	11-47		4800754	Lifting bracket	1
	J155	11-47		9007315-0604	Screw	1
S1TV	B095	11-47	15-37	1700256	Check valve poppet	1
	B096	11-47	15-37	1700257	Check valve spring	1
	J010	11-47	15-37	1700955	Shaft, 14 tooth with auxiliary drive	1
	J020	11-47	15-37	11077604	End cap, CW, radial ports, DL, gen. 1, JRR (SB-2010-002)	1
	J030	11-47	15-37	5000181 (9007314-1210)	Screw	4
	J050	11-47	15-37	9004700-1907	Pin	1
	J080	11-47	15-37	4570289	Flange adapter, A pad	1
	J090	11-47	15-37	5000099 (9004100-1550)	O-ring	1
	J095	11-47	15-37	545434 (9004100-0420)	O-ring	1
	J100	11-47	15-37	5000489	Screw	4
	J110	11-47	15-37	4460586	Cover plate	1
	J120	11-47	15-37	4800482	A pad seal	1
	J130	11-47	15-37	9007200-3712	Screw	2
	J140	11-47	15-37	1701186	Coupling, 11 tooth	1
	J150	11-47	15-37	4800754	Lifting bracket	1
	J155	11-47	15-37	9007315-0604	Screw	1

Shaft, auxiliary flange and end cap

(S1TY)

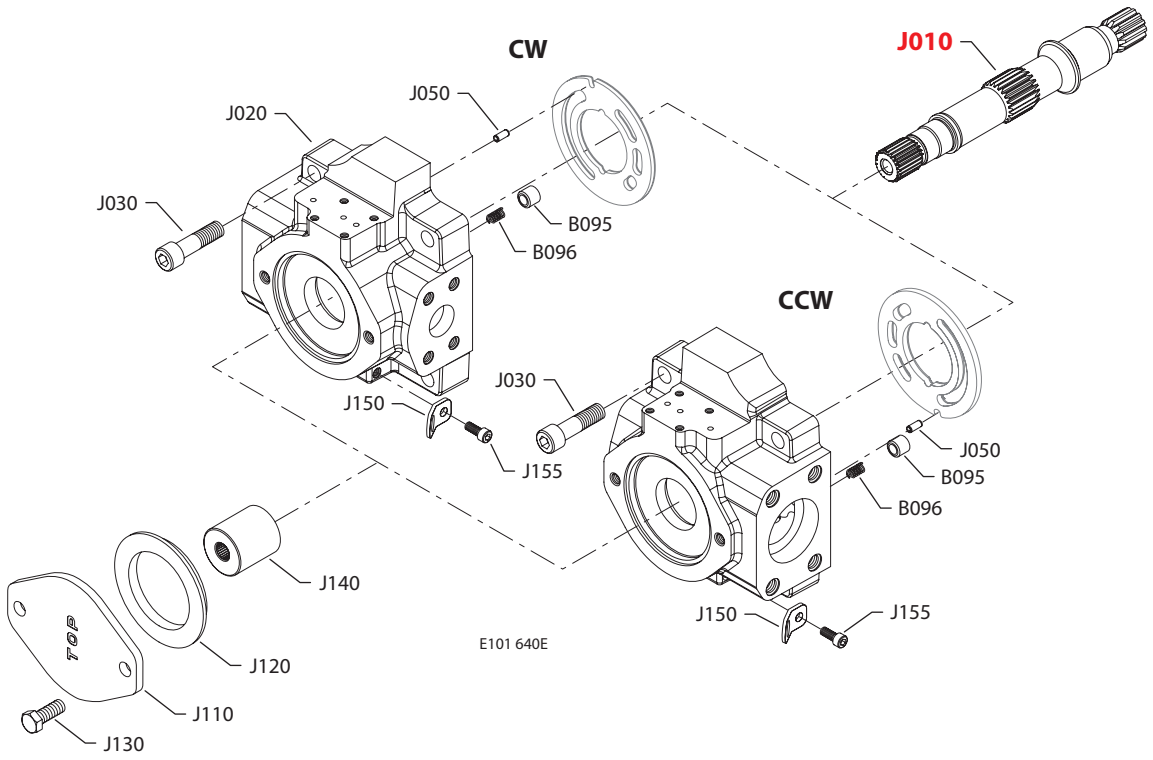

(S1V2 & S1VE)

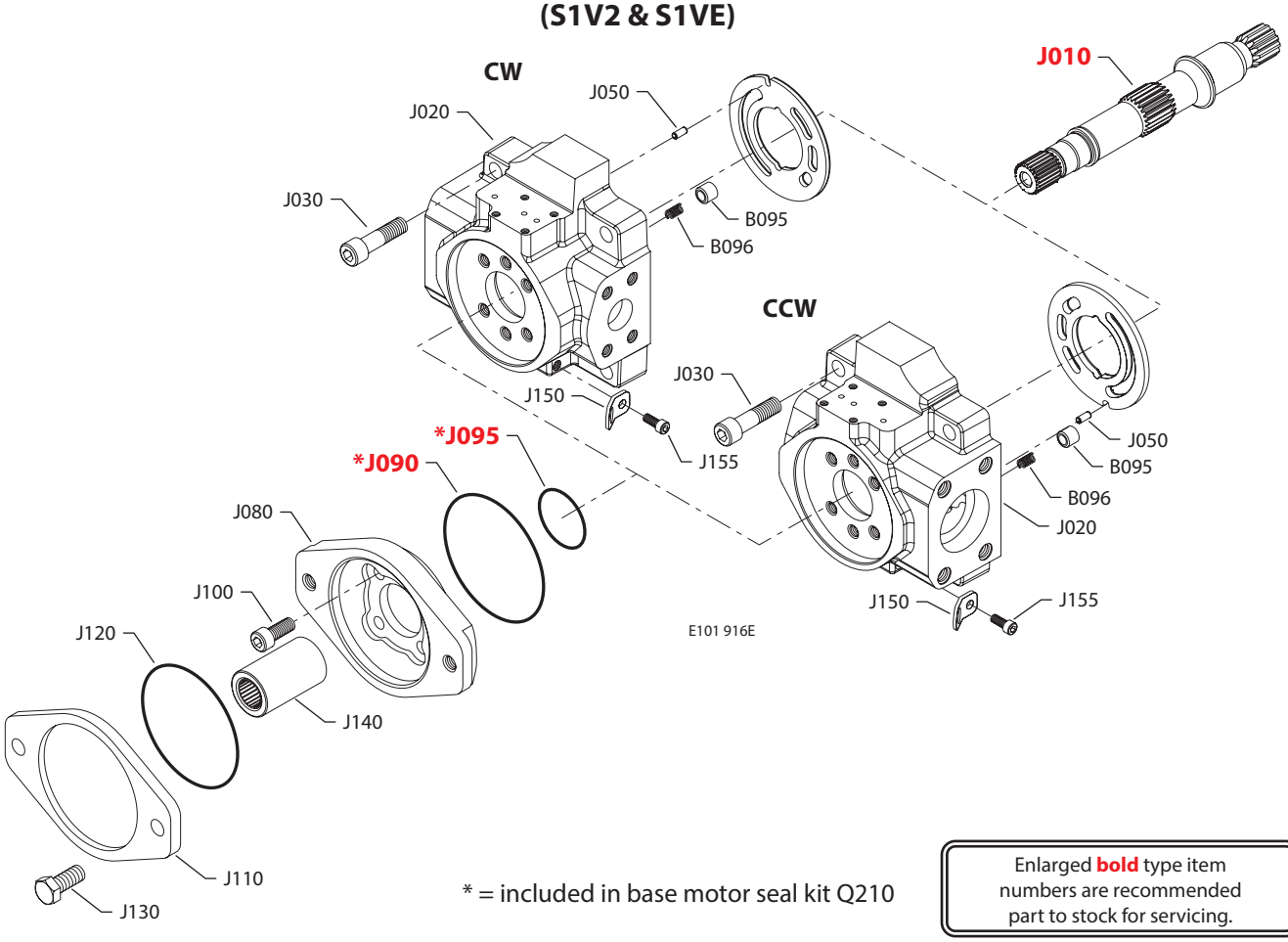

* = included in base motor seal kit Q210

Enlarged **bold** type item numbers are recommended part to stock for servicing.

Shaft, auxiliary flange and end cap

Shaft/auxiliary flange/end cap

Order code	Item	Date begin	Date end	Part number	Part name	Qty. per model/kit
S1TY	B095	11-47		1700256	Check valve poppet	1
	B096	11-47		1700257	Check valve spring	1
	J010	11-47		1700955	Shaft, 14 tooth with auxiliary drive	1
	J020	11-47		11091564	End cap, CW, radial ports, gen. 2, JRL	1
	J020	11-47		11095329	End cap, CCW, radial ports, gen. 2, JRL	1
	J030	11-47		5000181 (9007314-1210)	Screw	4
	J050	11-47		9004700-1907	Pin	1
	J110	11-47		4460586	Cover plate	1
	J120	11-47		4800482	A pad seal	1
	J130	11-47		9007200-3712	Screw	2
	J140	11-47		1700731	Coupling, 11 tooth	1
	J150	11-47		4800754	Lifting bracket	1
	J155	11-47		9007315-0604	Screw	1
S1V2	B095	03-23	15-39	1700256	Check valve poppet	1
	B096	03-23	15-39	1700257	Check valve spring	1
	J010	03-23	15-39	1700955	Shaft, 14 tooth with auxiliary drive	1
	J020	03-23	15-39	11077600	End cap, CW, radial ports, gen. 1, JRR (SB-2010-002)	1
	J020	03-23	15-39	11077606	End cap, CCW, radial ports, gen. 1, JRL (SB-2010-002)	1
	J030	03-23	15-39	5000181 (9007314-1210)	Screw	4
	J050	03-23	15-39	9004700-1907	Pin	1
	J080	03-23	15-39	4570210	Flange adapter, B pad	1
	J090	03-23	15-39	5000099 (9004100-1550)	O-ring	1
	J095	03-23	15-39	545434 (9004100-0420)	O-ring	1
	J100	03-23	15-39	5000489	Screw	4
	J110	03-23	15-39	4460370	Cover plate	1
	J120	03-23	15-39	9004104-0440	O-ring	1
	J130	03-23	15-39	9007200-5021	Screw	2
	J140	03-23	15-39	1701188	Coupling, 15 tooth	1
	J150	03-23	15-39	4800754	Lifting bracket	1
	J155	03-23	15-39	9007315-0604	Screw	1
S1VE	B095	11-45		1700256	Check valve poppet	1
	B096	11-45		1700257	Check valve spring	1
	J010	11-45		1700955	Shaft, 14 tooth with auxiliary drive	1
	J020	11-45		11092368	End cap, CW, radial ports, gen. 2, JRR	1
	J020	11-45		11086934	End cap, CCW, radial ports, gen. 2, JRL	1
	J030	11-45		5000181 (9007314-1210)	Screw	4
	J050	11-45		9004700-1907	Pin	1
	J080	11-45		4570210	Flange adapter, B pad	1
	J090	11-45		5000099 (9004100-1550)	O-ring	1
	J095	11-45		545434 (9004100-0420)	O-ring	1
	J100	11-45		5000489	Screw	4
	J110	11-45		4460370	Cover plate	1
	J120	11-45		9004104-0440	O-ring	1
	J130	11-45		9007200-5021	Screw	2
	J140	11-45		1701188	Coupling, 15 tooth	1
	J150	11-45		4800754	Lifting bracket	1
	J155	11-45		9007315-0604	Screw	1

Shaft, auxiliary flange and end cap

(S1VF & S1VV)

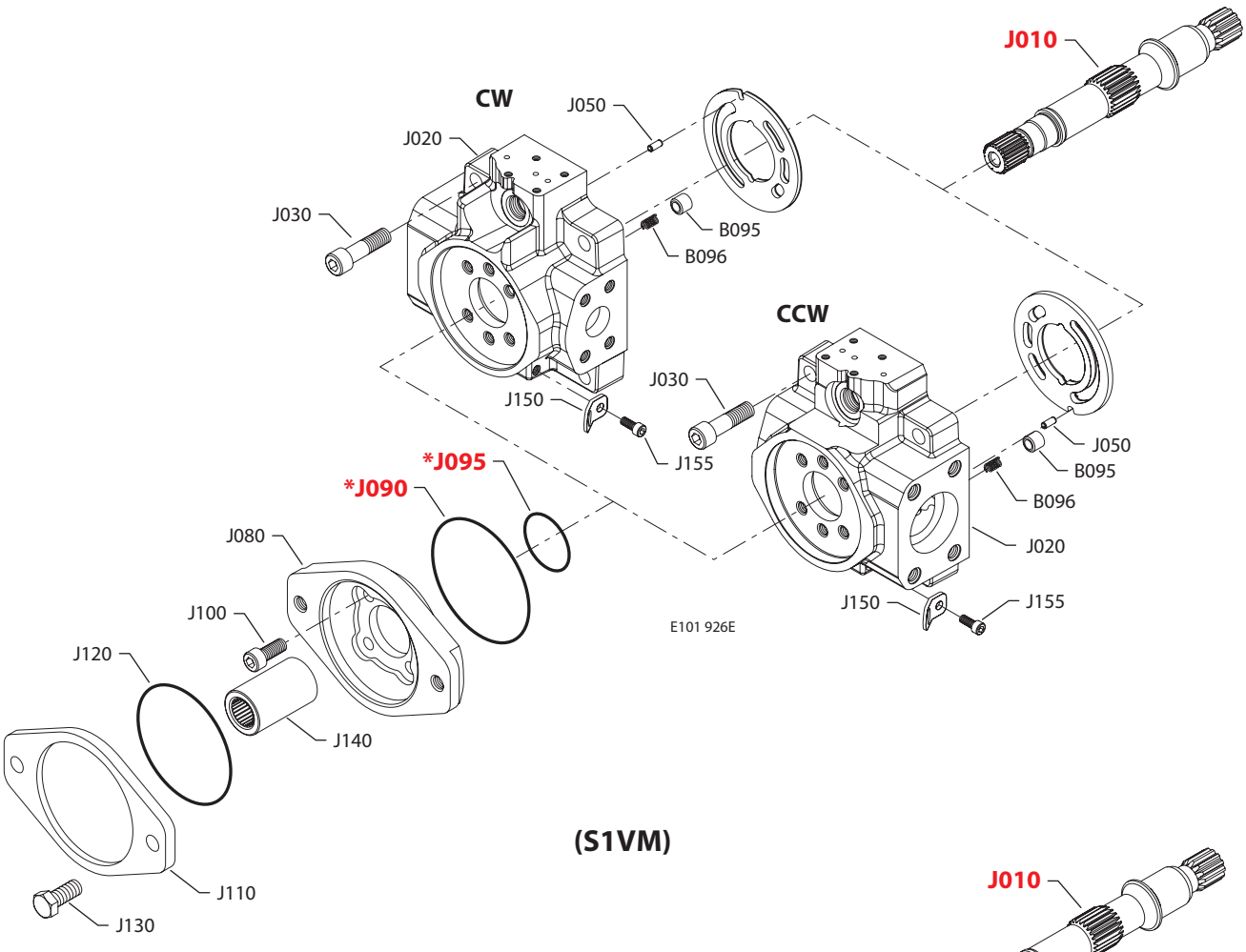

(S1VM)

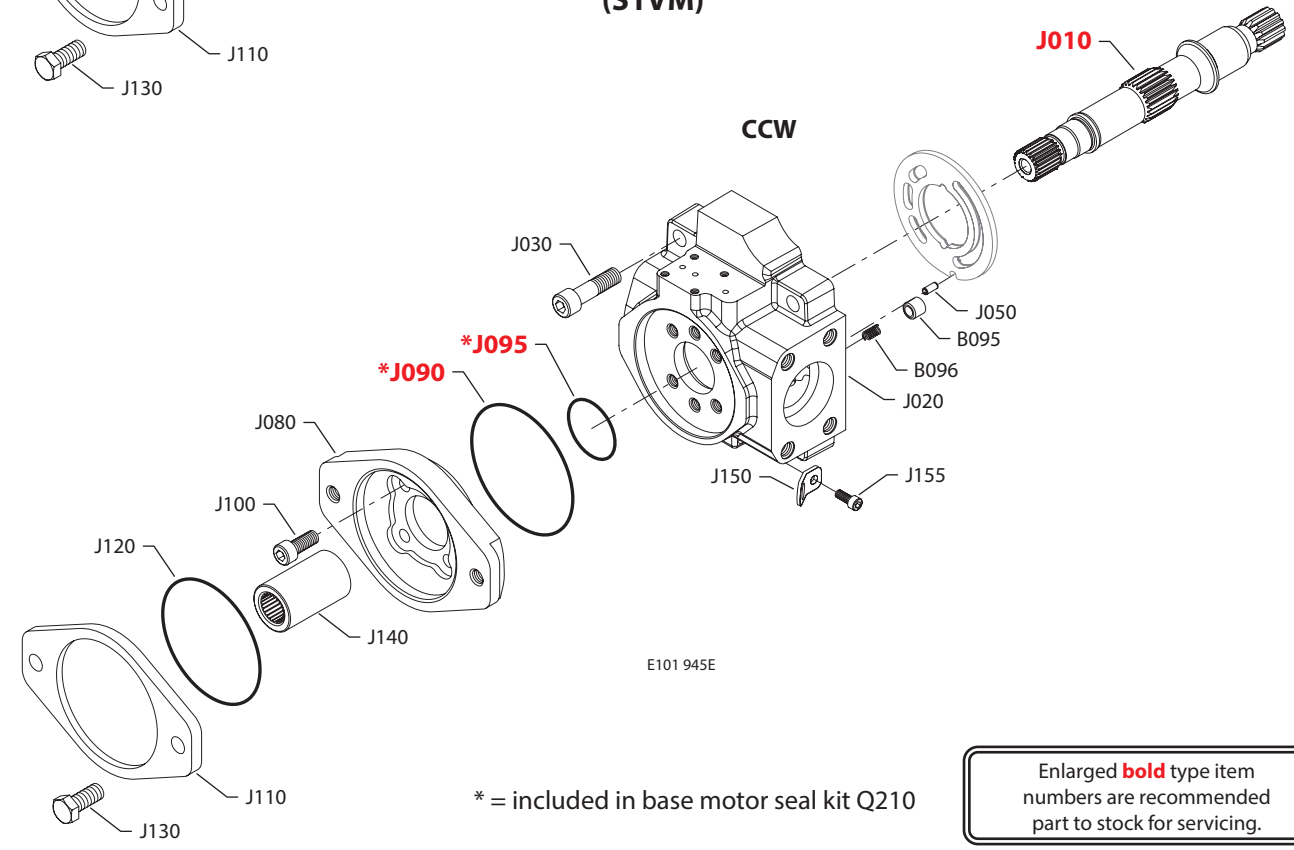

* = included in base motor seal kit Q210

Enlarged **bold** type item numbers are recommended part to stock for servicing.

Shaft, auxiliary flange and end cap

Shaft/auxiliary flange/end cap

Order code	Item	Date begin	Date end	Part number	Part name	Qty. per model/kit
S1VF	B095	11-47		1700256	Check valve poppet	1
	B096	11-47		1700257	Check valve spring	1
	J010	11-47		1700955	Shaft, 14 tooth with auxiliary drive	1
	J020	11-47		11095327	End cap, CW, radial ports, DL, gen. 2, JRL	1
	J020	11-47		11086919	End cap, CCW, radial ports, DL, gen. 2, JRL	1
	J030	11-47		5000181 (9007314-1210)	Screw	4
	J050	11-47		9004700-1907	Pin	1
	J080	11-47		4570210	Flange adapter, B pad	1
	J090	11-47		5000099 (9004100-1550)	O-ring	1
	J095	11-47		545434 (9004100-0420)	O-ring	1
	J100	11-47		5000489	Screw	4
	J110	11-47		4460370	Cover plate	1
	J120	11-47		9004104-0440	O-ring	1
	J130	11-47		9007200-5021	Screw	2
	J140	11-47		1701188	Coupling, 15 tooth	1
	J150	11-47		4800754	Lifting bracket	1
	J155	11-47		9007315-0604	Screw	1
S1VM	B095	14-04		1700256	Check valve poppet	1
	B096	14-04		1700257	Check valve spring	1
	J010	14-04		1700955	Shaft, 14 tooth with auxiliary drive	1
	J020	14-04		11117044	End cap, CCW, radial ports, gen. 2, JRL	1
	J030	14-04		5000181 (9007314-1210)	Screw	4
	J050	14-04		9004700-1907	Pin	1
	J080	14-04		4570390	Flange adapter, B pad, metric	1
	J090	14-04		5000099 (9004100-1550)	O-ring	1
	J095	14-04		545434 (9004100-0420)	O-ring	1
	J100	14-04		5000489	Screw	4
	J110	14-04		4460370	Cover plate	1
	J120	14-04		9004104-0440	O-ring	1
	J130	14-04		370320	Screw	2
	J140	14-04		1701188	Coupling, 15 tooth	1
	J150	14-04		4800754	Lifting bracket	1
	J155	14-04		9007315-0604	Screw	1
S1VV	B095	11-10	15-37	1700256	Check valve poppet	1
	B096	11-10	15-37	1700257	Check valve spring	1
	J010	11-10	15-37	1700955	Shaft, 14 tooth with auxiliary drive	1
	J020	11-10	15-37	11077608	End cap, CCW, radial ports, DL, gen. 1, JRL	1
	J030	11-10	15-37	5000181 (9007314-1210)	Screw	4
	J050	11-10	15-37	9004700-1907	Pin	1
	J080	11-10	15-37	4570210	Flange adapter, B pad	1
	J090	11-10	15-37	5000099 (9004100-1550)	O-ring	1
	J095	11-10	15-37	545434 (9004100-0420)	O-ring	1
	J100	11-10	15-37	5000489	Screw	4
	J110	11-10	15-37	4460370	Cover plate	1
	J120	11-10	15-37	9004104-0440	O-ring	1
	J130	11-10	15-37	9007200-5021	Screw	2
	J140	11-10	15-37	1701188	Coupling, 15 tooth	1
	J150	11-10	15-37	4800754	Lifting bracket	1
	J155	11-10	15-37	9007315-0604	Screw	1

Shaft, auxiliary flange and end cap

(S1VW, S1VX & S1WM)

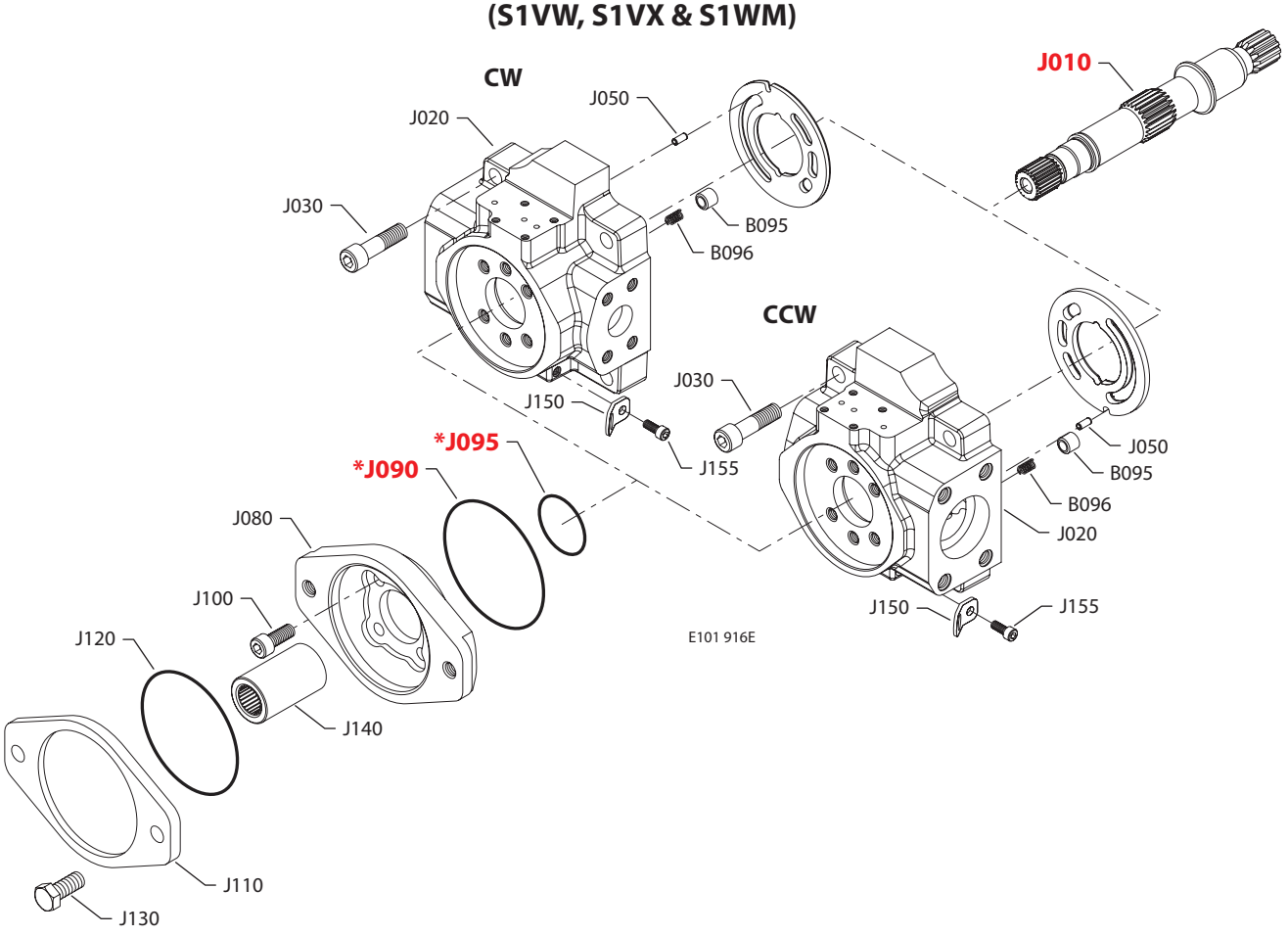

* = included in base motor seal kit Q210

Enlarged **bold** type item numbers are recommended part to stock for servicing.

Shaft, auxiliary flange and end cap

Shaft/auxiliary flange/end cap

Order code	Item	Date begin	Date end	Part number	Part name	Qty. per model/kit
S1VW	B095	11-45		1700256	Check valve poppet	1
	B096	11-45		1700257	Check valve spring	1
	J010	11-45		1700955	Shaft, 14 tooth with auxiliary drive	1
	J020	11-45		11092368	End cap, CW, radial ports, gen. 2, JRR	1
	J030	11-45		5000181 (9007314-1210)	Screw	4
	J050	11-45		9004700-1907	Pin	1
	J080	11-45		4570210	Flange adapter, B pad	1
	J090	11-45		5000099 (9004100-1550)	O-ring	1
	J095	11-45		545434 (9004100-0420)	O-ring	1
	J100	11-45		5000489	Screw	4
	J110	11-45		4460370	Cover plate	1
	J120	11-45		9004104-0440	O-ring	1
	J130	11-45		9007200-5021	Screw	2
	J140	11-45		4570133	Coupling, 14 tooth	1
	J150	11-45		4800754	Lifting bracket	1
	J155	11-45		9007315-0604	Screw	1
S1VX	B095	14-04		1700256	Check valve poppet	1
	B096	14-04		1700257	Check valve spring	1
	J010	14-04		1700955	Shaft, 14 tooth with auxiliary drive	1
	J020	14-04		11106867	End cap, CW, radial ports, gen. 2, JRL	1
	J020	14-04		11117044	End cap, CCW, radial ports, gen. 2, JRL	1
	J030	14-04		5000181 (9007314-1210)	Screw	4
	J050	14-04		9004700-1907	Pin	1
	J080	14-04		4570210	Flange adapter, B pad	1
	J090	14-04		5000099 (9004100-1550)	O-ring	1
	J095	14-04		545434 (9004100-0420)	O-ring	1
	J100	14-04		5000489	Screw	4
	J110	14-04		4460370	Cover plate	1
	J120	14-04		9004104-0440	O-ring	1
	J130	14-04		9007200-5021	Screw	2
	J140	14-04		1701188	Coupling, 15 tooth	1
	J150	14-04		4800754	Lifting bracket	1
	J155	14-04		9007315-0604	Screw	1
S1WM	B095	11-10		1700256	Check valve poppet	1
	B096	11-10		1700257	Check valve spring	1
	J010	11-10		1700955	Shaft, 14 tooth with auxiliary drive	1
	J020	11-10		11117044	End cap, CCW, radial ports, gen. 2, JRL	1
	J030	11-10		5000181 (9007314-1210)	Screw	4
	J050	11-10		9004700-1907	Pin	1
	J080	11-10		4570390	Flange adapter, B pad, metric	1
	J090	11-10		5000099 (9004100-1550)	O-ring	1
	J095	11-10		545434 (9004100-0420)	O-ring	1
	J100	11-10		5000489	Screw	4
	J110	11-10		4460370	Cover plate	1
	J120	11-10		9004104-0440	O-ring	1
	J130	11-10		370320	Screw	2
	J140	11-10		4570133	Coupling, 14 tooth	1
	J150	11-10		4800754	Lifting bracket	1
	J155	11-10		9007315-0604	Screw	1

Shaft, auxiliary flange and end cap

(S1WW)

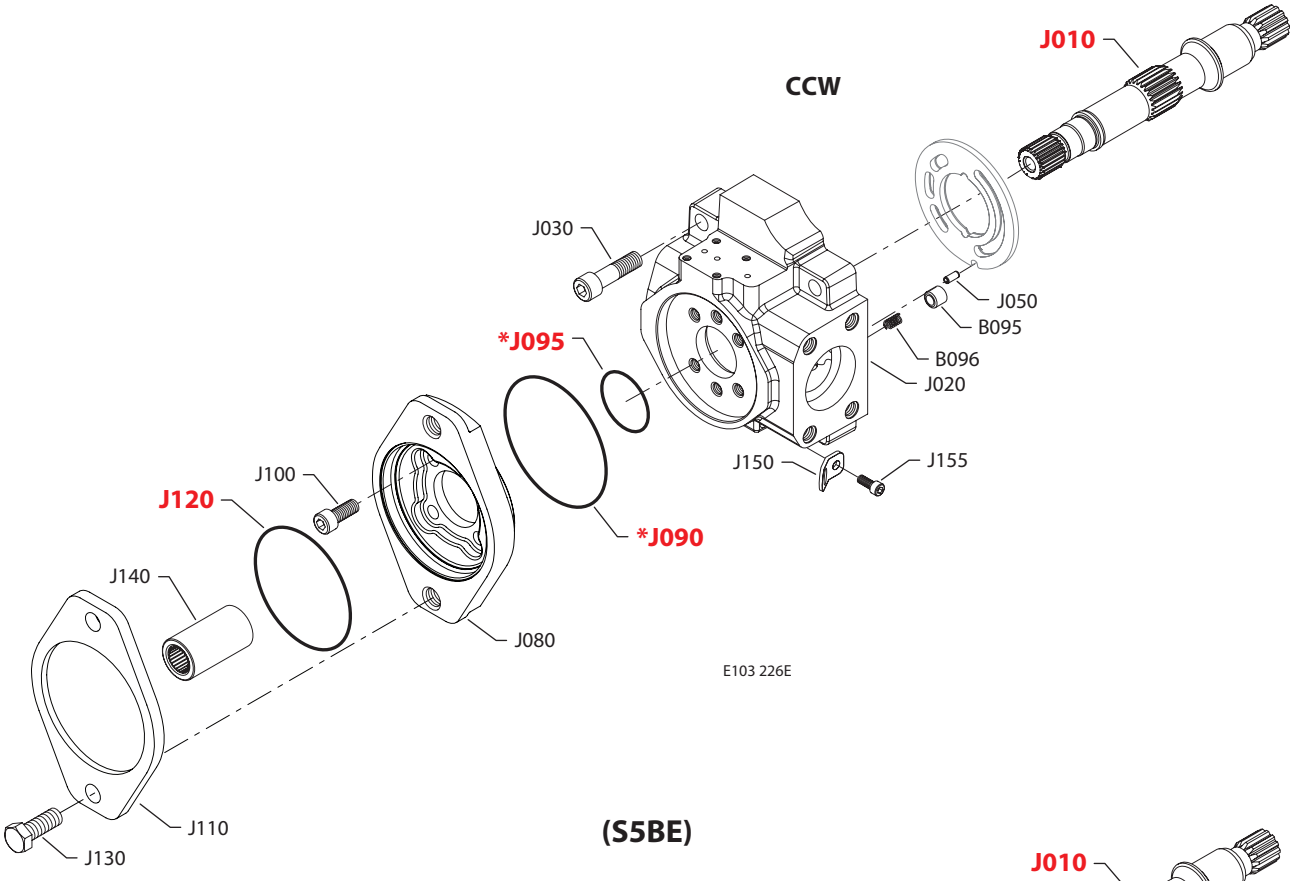

(S5BE)

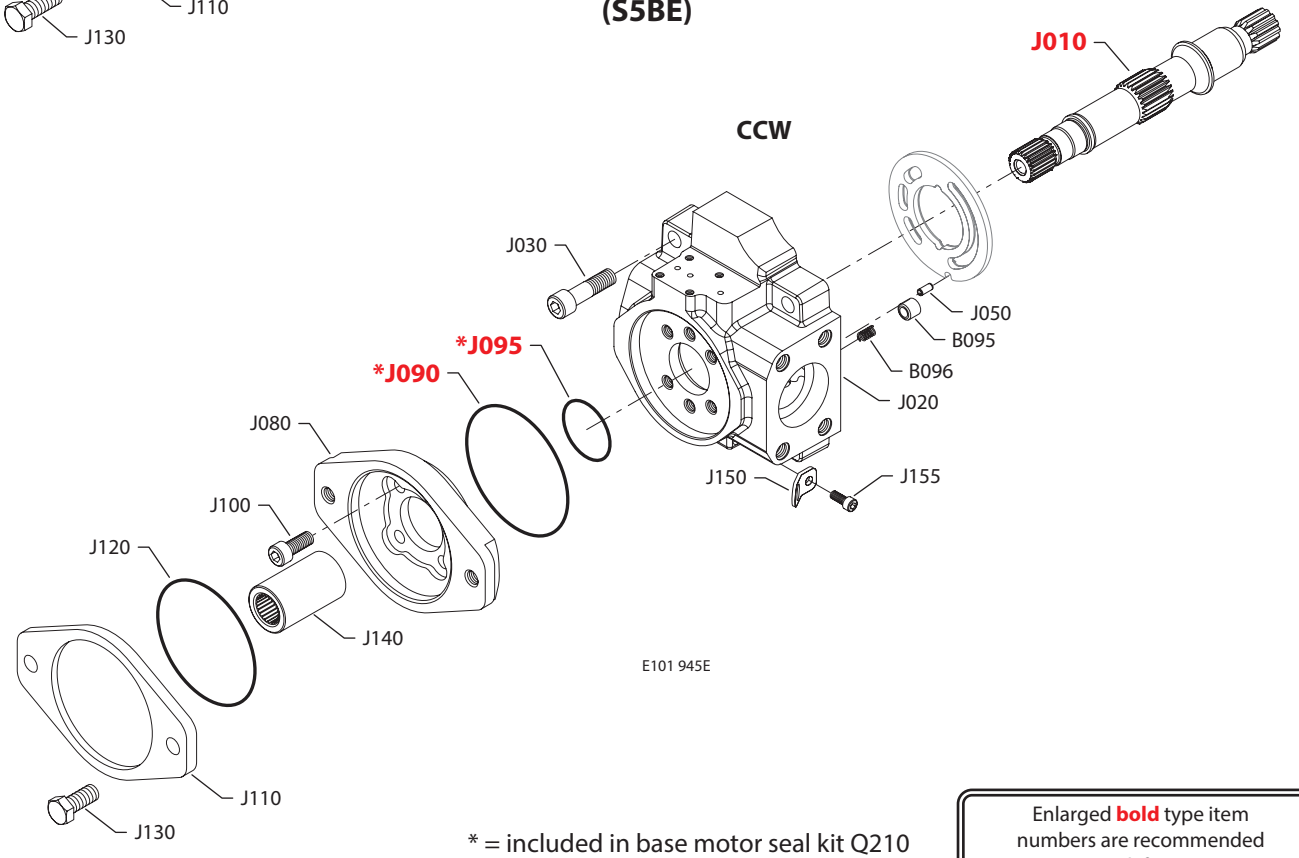

* = included in base motor seal kit Q210

Enlarged **bold** type item numbers are recommended part to stock for servicing.

Shaft, auxiliary flange and end cap

Shaft/auxiliary flange/end cap

Order code	Item	Date begin	Date end	Part number	Part name	Qty. per model/kit
S1WW	B095	11-10		1700256	Check valve poppet	1
	B096	11-10		1700257	Check valve spring	1
	J010	11-10		1700955	Shaft, 14 tooth with auxiliary drive	1
	J020	11-10		11117044	End cap, CCW, radial ports, gen. 2, JRL	1
	J030	11-10		5000181 (9007314-1210)	Screw	4
	J050	11-10		9004700-1907	Pin	1
	J080	11-10		4570390	Flange adapter, B pad, metric	1
	J090	11-10		5000099 (9004100-1550)	O-ring	1
	J095	11-10		545434 (9004100-0420)	O-ring	1
	J100	11-10		5000489	Screw	4
	J110	11-10		4460370	Cover plate	1
	J120	11-10		9004104-0440	O-ring	1
	J130	11-10		370320	Screw	2
	J140	11-10		4570133	Coupling, 14 tooth	1
	J150	11-10		4800754	Lifting bracket	1
	J155	11-10		9007315-0604	Screw	1
S5BE	B095	13-09		1700256	Check valve poppet	1
	B096	13-09		1700257	Check valve spring	1
	J010	13-09		11076458	Shaft, 14 tooth w/auxiliary drive, w/threaded hole	1
	J020	13-09		11086934	End cap, CCW, radial ports, gen. 2, JRL	1
	J030	13-09		5000181 (9007314-1210)	Screw	4
	J050	13-09		9004700-1907	Pin	1
	J080	13-09		4570210	Flange adapter, B pad	1
	J090	13-09		5000099 (9004100-1550)	O-ring	1
	J095	13-09		545434 (9004100-0420)	O-ring	1
	J100	13-09		5000489	Screw	4
	J110	13-09		4460370	Cover plate	1
	J120	13-09		9004104-0440	O-ring	1
	J130	13-09		9007200-5021	Screw	2
	J140	13-09		1701187	Coupling, 13 tooth	1
	J150	13-09		4800754	Lifting bracket	1
	J155	13-09		9007315-0604	Screw	1

Shaft, auxiliary flange and end cap

(S5C2 & S5CE)

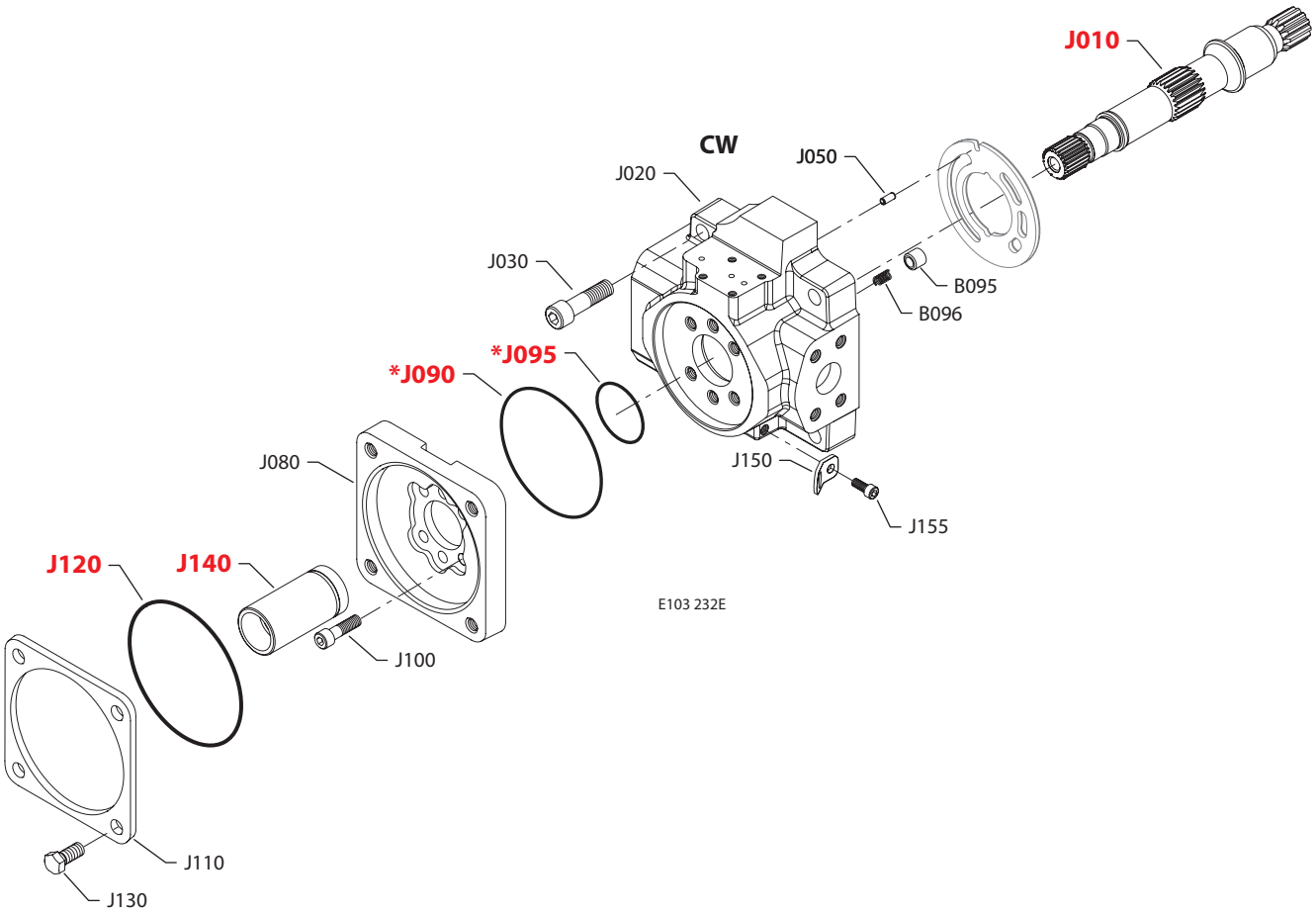

(S5N2 & S5NE)

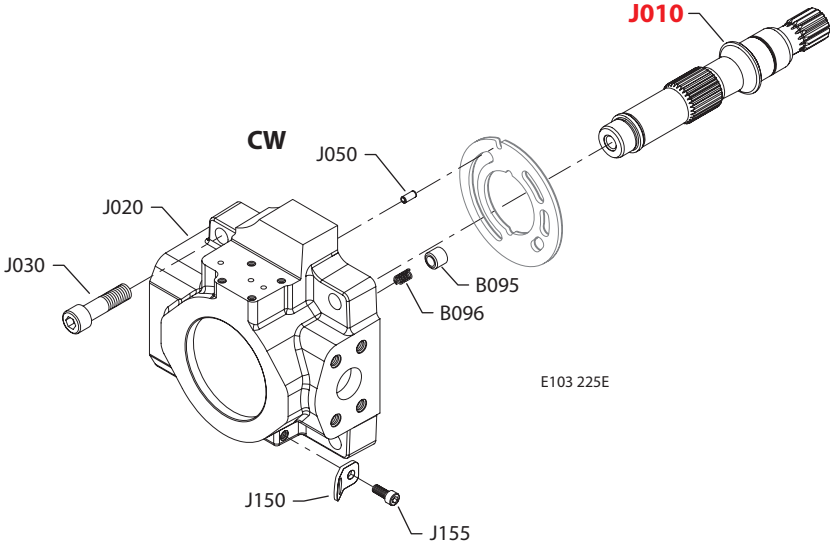

* = included in base motor seal kit Q210

Enlarged **bold** type item numbers are recommended part to stock for servicing.

Shaft, auxiliary flange and end cap

Shaft/auxiliary flange/end cap

Order code	Item	Date begin	Date end	Part number	Part name	Qty. per model/kit
S5C2	B095	12-07	15-39	1700256	Check valve poppet	1
	B096	12-07	15-39	1700257	Check valve spring	1
	J010	12-07	15-39	11076458	Shaft, 14 tooth with auxiliary drive, tapped	1
	J020	12-07	15-39	11077600	End cap, CW, radial ports, gen. 1, JRR	1
	J030	12-07	15-39	5000181 (9007314-1210)	Screw	4
	J050	12-07	15-39	9004700-1907	Pin	1
	J080	12-07	15-39	11039356	Flange adapter, C pad	1
	J090	12-07	15-39	5000099 (9004100-1550)	O-ring	1
	J095	12-07	15-39	545434 (9004100-0420)	O-ring	1
	J100	12-07	15-39	5000489	Screw	6
	J110	12-07	15-39	8800406	Cover plate	1
	J120	12-07	15-39	9004100-0480	O-ring	1
	J130	12-07	15-39	9007200-5021	Screw	4
	J140	12-07	15-39	4570133	Coupling, 14 tooth	1
	J150	12-07	15-39	4800754	Lifting bracket	1
	J155	12-07	15-39	9007315-0604	Screw	1
S5CE	B095	13-21		1700256	Check valve poppet	1
	B096	13-21		1700257	Check valve spring	1
	J010	13-21		11076458	Shaft, 14 tooth with auxiliary drive, tapped	1
	J020	13-21		11092368	End cap, CW, radial ports, gen. 2, JRR	1
	J030	13-21		5000181 (9007314-1210)	Screw	4
	J050	13-21		9004700-1907	Pin	1
	J080	13-21		11039356	Flange adapter, C pad	1
	J090	13-21		5000099 (9004100-1550)	O-ring	1
	J095	13-21		545434 (9004100-0420)	O-ring	1
	J100	13-21		5000489	Screw	6
	J110	13-21		8800406	Cover plate	1
	J120	13-21		9004100-0480	O-ring	1
	J130	13-21		9007200-5021	Screw	4
	J140	13-21		4570133	Coupling, 14 tooth	1
	J150	13-21		4800754	Lifting bracket	1
	J155	13-21		9007315-0604	Screw	1
S5N2	B095	12-07		1700256	Check valve poppet	1
	B096	12-07		1700257	Check valve spring	1
	J010	12-07		11076457	Shaft, 14 tooth without auxiliary drive, tapped	1
	J020	12-07		11068228	End cap, CW, radial ports, gen. 1, JRR (SB-2010-002)	1
	J030	12-07		5000181 (9007314-1210)	Screw	4
	J050	12-07		9004700-1907	Pin	1
	J150	12-07		4800754	Lifting bracket	1
	J155	12-07		9007315-0604	Screw	1
S5NE	B095	13-21		1700256	Check valve poppet	1
	B096	13-21		1700257	Check valve spring	1
	J010	13-21		11076457	Shaft, 14 tooth without auxiliary drive, tapped	1
	J020	13-21		11095323	End cap, CW, radial ports, gen. 2, JRR	1
	J030	13-21		5000181 (9007314-1210)	Screw	4
	J050	13-21		9004700-1907	Pin	1
	J150	13-21		4800754	Lifting bracket	1
	J155	13-21		9007315-0604	Screw	1

Shaft, auxiliary flange and end cap

(T0A2 & T0AE)

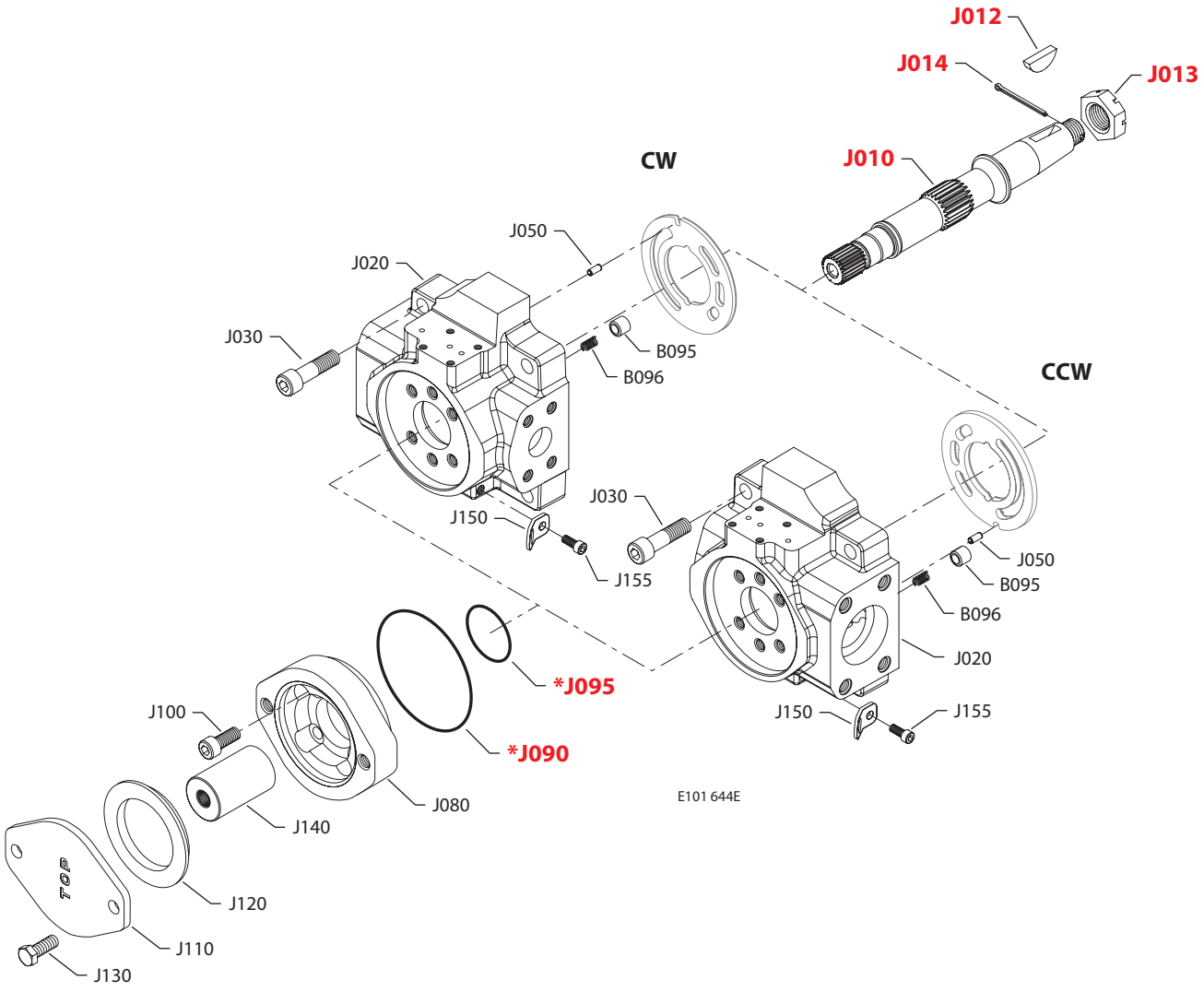

* = included in base motor seal kit Q210

Enlarged **bold** type item numbers are recommended part to stock for servicing.

Shaft, auxiliary flange and end cap

Shaft/auxiliary flange/end cap

Order code	Item	Date begin	Date end	Part number	Part name	Qty. per model/kit
T0A2	B095	03-23	15-39	1700256	Check valve poppet	1
	B096	03-23	15-39	1700257	Check valve spring	1
	J010	03-23	15-39	1700947	Shaft, tapered with auxiliary drive	1
	J012	03-23	15-39	5000362	Key	1
	J013	03-23	15-39	5000606	Slotted nut	1
	J014	03-23	15-39	9004600-1230	Cotter pin	1
	J020	03-23	15-39	11077606	End cap, CCW, radial ports, gen. 1, JRL (SB-2010-002)	1
	J030	03-23	15-39	5000181 (9007314-1210)	Screw	4
	J050	03-23	15-39	9004700-1907	Pin	1
	J080	03-23	15-39	4570289	Flange adapter, A pad	1
	J090	03-23	15-39	5000099 (9004100-1550)	O-ring	1
	J095	03-23	15-39	545434 (9004100-0420)	O-ring	1
	J100	03-23	15-39	5000489	Screw	4
	J110	03-23	15-39	4460586	Cover plate	1
	J120	03-23	15-39	4800482	A pad seal	1
	J130	03-23	15-39	9007200-3712	Screw	2
	J140	03-23	15-39	1701185	Coupling, 9 tooth	1
	J150	03-23	15-39	4800754	Lifting bracket	1
	J155	03-23	15-39	9007315-0604	Screw	1
T0AE	B095	11-45		1700256	Check valve poppet	1
	B096	11-45		1700257	Check valve spring	1
	J010	11-45		1700947	Shaft, tapered with auxiliary drive	1
	J012	11-45		5000362	Key	1
	J013	11-45		5000606	Slotted nut	1
	J014	11-45		9004600-1230	Cotter pin	1
	J020	11-45		11092368	End cap, CW, radial ports, gen. 2, JRR	1
	J020	11-45		11086934	End cap, CCW, radial ports, gen. 2, JRL	1
	J030	11-45		5000181 (9007314-1210)	Screw	4
	J050	11-45		9004700-1907	Pin	1
	J080	11-45		4570289	Flange adapter, A pad	1
	J090	11-45		5000099 (9004100-1550)	O-ring	1
	J095	11-45		545434 (9004100-0420)	O-ring	1
	J100	11-45		5000489	Screw	4
	J110	11-45		4460586	Cover plate	1
	J120	11-45		4800482	A pad seal	1
	J130	11-45		9007200-3712	Screw	2
	J140	11-45		1701185	Coupling, 9 tooth	1
	J150	11-45		4800754	Lifting bracket	1
	J155	11-45		9007315-0604	Screw	1

Shaft, auxiliary flange and end cap

(T0B2 & T0BE)

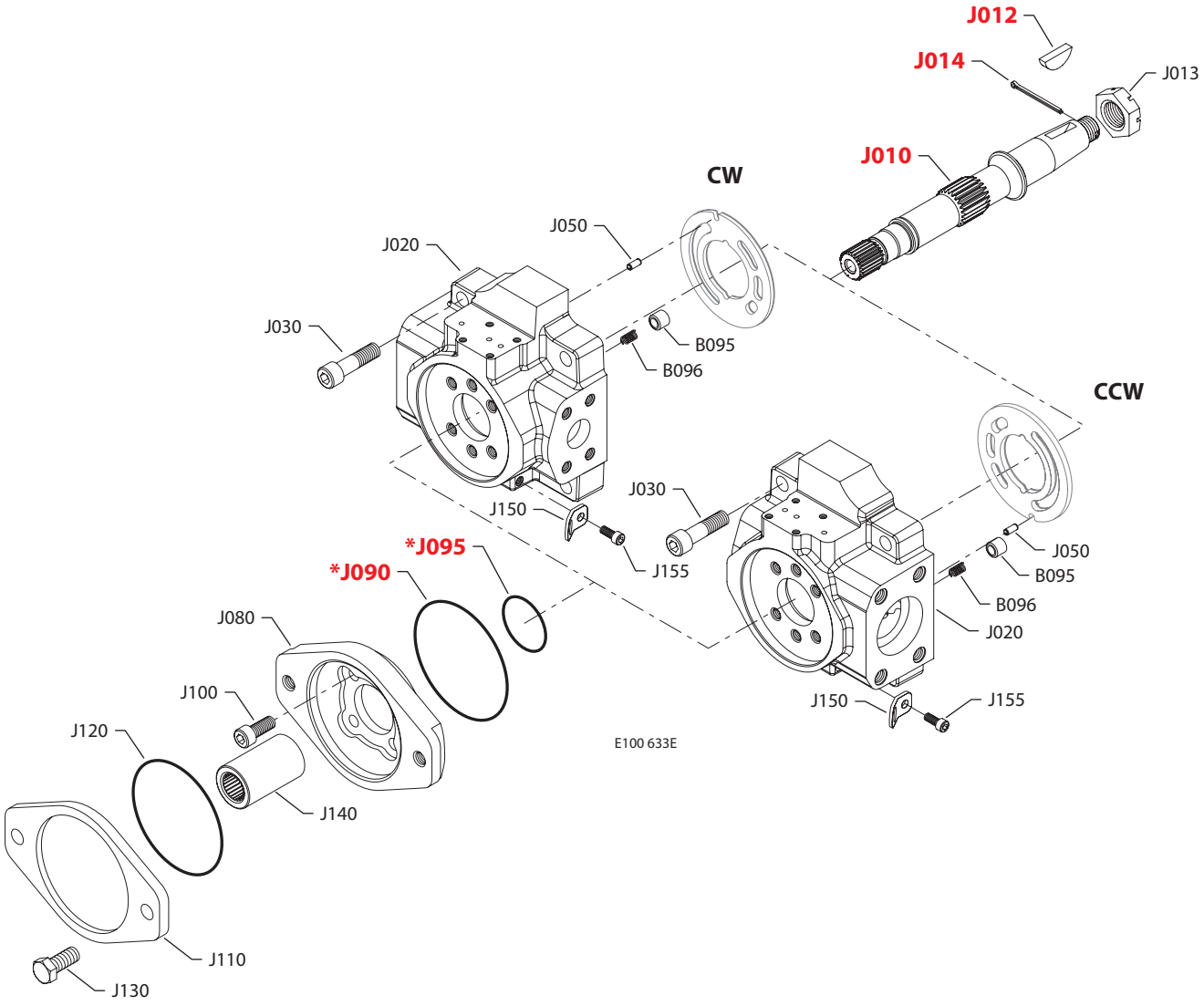

* = included in base motor seal kit Q210

Enlarged **bold** type item numbers are recommended part to stock for servicing.

Shaft, auxiliary flange and end cap

Shaft/auxiliary flange/end cap

Order code	Item	Date begin	Date end	Part number	Part name	Qty. per model/kit
T0B2	B095	03-23	15-39	1700256	Check valve poppet	1
	B096	03-23	15-39	1700257	Check valve spring	1
	J010	03-23	15-39	1700947	Shaft, tapered with auxiliary drive	1
	J012	03-23	15-39	5000362	Key	1
	J013	03-23	15-39	5000606	Slotted nut	1
	J014	03-23	15-39	9004600-1230	Cotter pin	1
	J020	03-23	15-39	11077600	End cap, CW, radial ports, gen. 1, JRR (SB-2010-002)	1
	J020	03-23	15-39	11077606	End cap, CCW, radial ports, gen. 1, JRL (SB-2010-002)	1
	J030	03-23	15-39	5000181 (9007314-1210)	Screw	4
	J050	03-23	15-39	9004700-1907	Pin	1
	J080	03-23	15-39	4570210	Flange adapter, B pad	1
	J090	03-23	15-39	5000099 (9004100-1550)	O-ring	1
	J095	03-23	15-39	545434 (9004100-0420)	O-ring	1
	J100	03-23	15-39	5000489	Screw	4
	J110	03-23	15-39	4460370	Cover plate	1
	J120	03-23	15-39	9004104-0440	O-ring	1
	J130	03-23	15-39	9007200-5021	Screw	2
	J140	03-23	15-39	1701187	Coupling, 13 tooth	1
	J150	03-23	15-39	4800754	Lifting bracket	1
	J155	03-23	15-39	9007315-0604	Screw	1
T0BE	B095	03-23		1700256	Check valve poppet	1
	B096	03-23		1700257	Check valve spring	1
	J010	03-23		1700947	Shaft, tapered with auxiliary drive	1
	J012	03-23		5000362	Key	1
	J013	03-23		5000606	Slotted nut	1
	J014	03-23		9004600-1230	Cotter pin	1
	J020	03-23		11092368	End cap, CW, radial ports, gen. 2, JRR (SB-2010-002)	1
	J020	03-23		11086934	End cap, CCW, radial ports, gen. 2, JRL (SB-2010-002)	1
	J030	03-23		5000181 (9007314-1210)	Screw	4
	J050	03-23		9004700-1907	Pin	1
	J080	03-23		4570210	Flange adapter, B pad	1
	J090	03-23		5000099 (9004100-1550)	O-ring	1
	J095	03-23		545434 (9004100-0420)	O-ring	1
	J100	03-23		5000489	Screw	4
	J110	03-23		4460370	Cover plate	1
	J120	03-23		9004104-0440	O-ring	1
	J130	03-23		9007200-5021	Screw	2
	J140	03-23		1701187	Coupling, 13 tooth	1
	J150	03-23		4800754	Lifting bracket	1
	J155	03-23		9007315-0604	Screw	1

Shaft, auxiliary flange and end cap

(T0BF & T0BV)

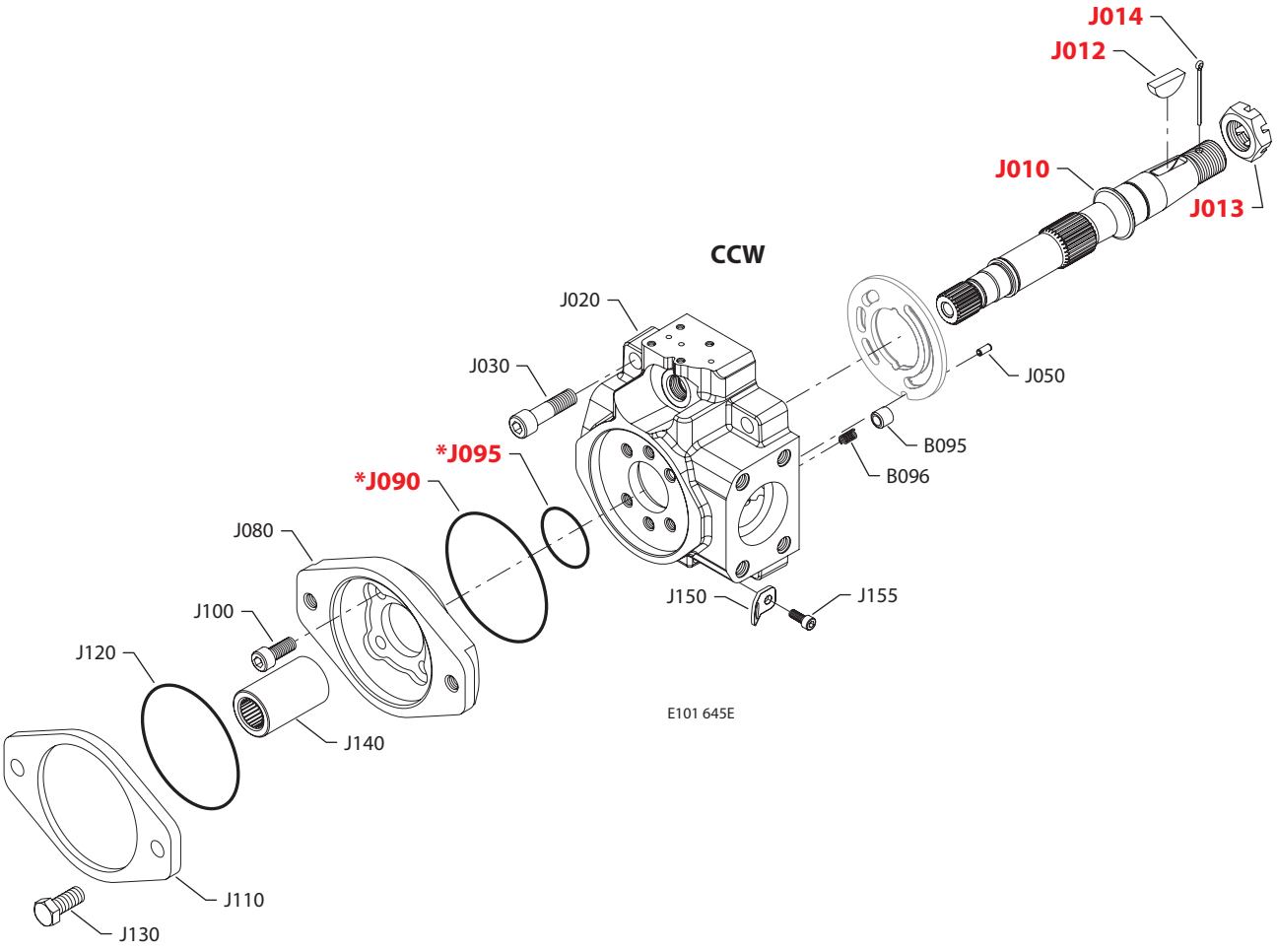

* = included in base motor seal kit Q210

Enlarged **bold** type item numbers are recommended part to stock for servicing.

Shaft, auxiliary flange and end cap

Shaft/auxiliary flange/end cap

Order code	Item	Date begin	Date end	Part number	Part name	Qty. per model/kit
T0BF	B095	03-23		1700256	Check valve poppet	1
	B096	03-23		1700257	Check valve spring	1
	J010	03-23		1700947	Shaft, tapered with auxiliary drive	1
	J012	03-23		5000362	Key	1
	J013	03-23		5000606	Slotted nut	1
	J014	03-23		9004600-1230	Cotter pin	1
	J020	03-23		11086919	End cap, CCW, radial ports, DL, gen. 2, JRL (SB-2010-002)	1
	J030	03-23		5000181 (9007314-1210)	Screw	4
	J050	03-23		9004700-1907	Pin	1
	J080	03-23		4570210	Flange adapter, B pad	1
	J090	03-23		5000099 (9004100-1550)	O-ring	1
	J095	03-23		545434 (9004100-0420)	O-ring	1
	J100	03-23		5000489	Screw	4
	J110	03-23		4460370	Cover plate	1
	J120	03-23		9004104-0440	O-ring	1
	J130	03-23		9007200-5021	Screw	2
	J140	03-23		1701187	Coupling, 13 tooth	1
	J150	03-23		4800754	Lifting bracket	1
	J155	03-23		9007315-0604	Screw	1
T0BV	B095	03-23	15-37	1700256	Check valve poppet	1
	B096	03-23	15-37	1700257	Check valve spring	1
	J010	03-23	15-37	1700947	Shaft, tapered with auxiliary drive	1
	J012	03-23	15-37	5000362	Key	1
	J013	03-23	15-37	5000606	Slotted nut	1
	J014	03-23	15-37	9004600-1230	Cotter pin	1
	J020	03-23	15-37	11077608	End cap, CCW, radial ports, DL, gen. 1, JRL (SB-2010-002)	1
	J030	03-23	15-37	5000181 (9007314-1210)	Screw	4
	J050	03-23	15-37	9004700-1907	Pin	1
	J080	03-23	15-37	4570210	Flange adapter, B pad	1
	J090	03-23	15-37	5000099 (9004100-1550)	O-ring	1
	J095	03-23	15-37	545434 (9004100-0420)	O-ring	1
	J100	03-23	15-37	5000489	Screw	4
	J110	03-23	15-37	4460370	Cover plate	1
	J120	03-23	15-37	9004104-0440	O-ring	1
	J130	03-23	15-37	9007200-5021	Screw	2
	J140	03-23	15-37	1701187	Coupling, 13 tooth	1
	J150	03-23	15-37	4800754	Lifting bracket	1
	J155	03-23	15-37	9007315-0604	Screw	1

Shaft, auxiliary flange and end cap

(T0C2 & T0CE)

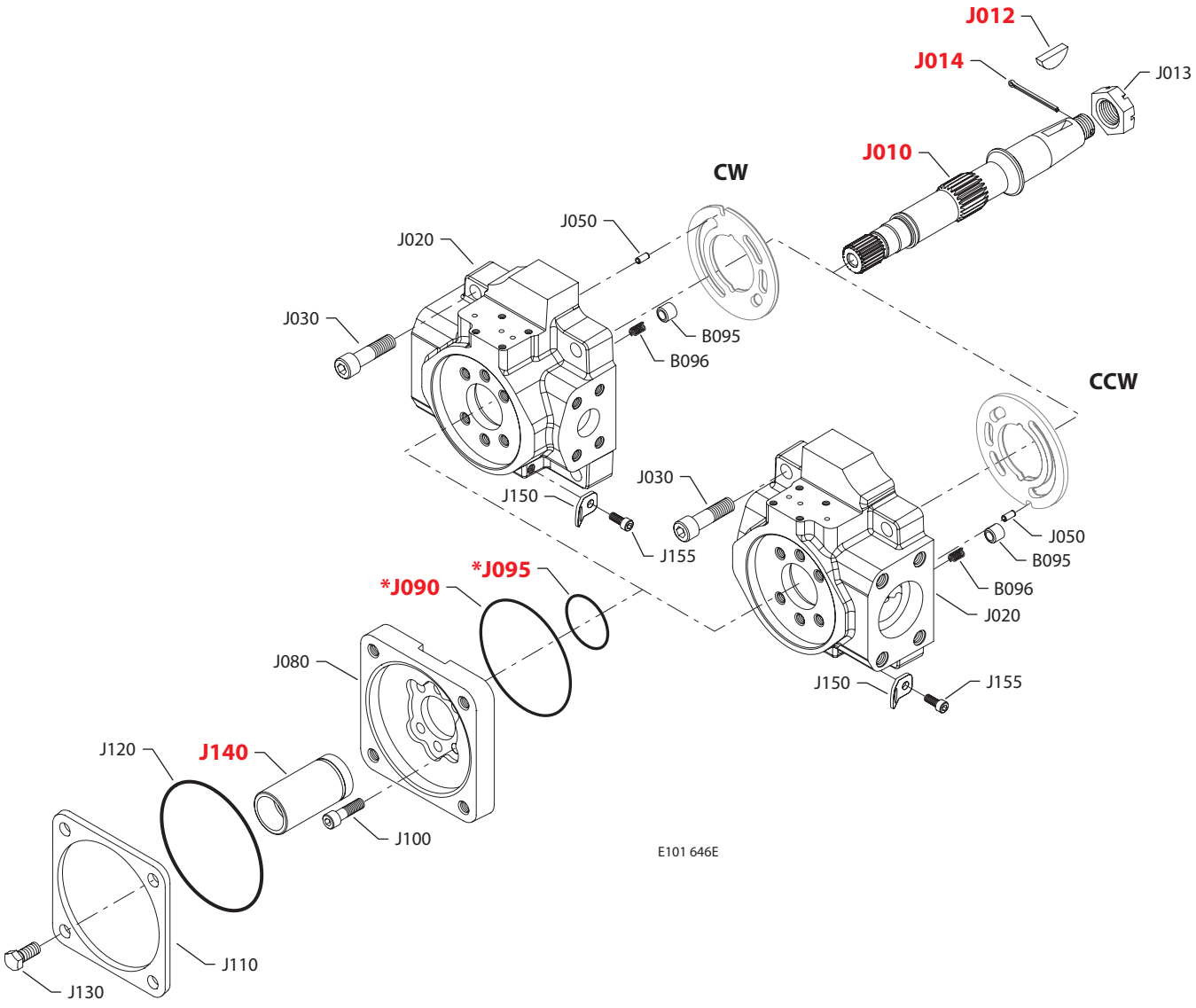

* = included in base motor seal kit Q210

Enlarged **bold** type item numbers are recommended part to stock for servicing.

Shaft, auxiliary flange and end cap

Shaft/auxiliary flange/end cap

Order code	Item	Date begin	Date end	Part number	Part name	Qty. per model/kit
T0C2	B095	03-23	15-39	1700256	Check valve poppet	1
	B096	03-23	15-39	1700257	Check valve spring	1
	J010	03-23	15-39	1700947	Shaft, tapered with auxiliary drive	1
	J012	03-23	15-39	5000362	Key	1
	J013	03-23	15-39	5000606	Slotted nut	1
	J014	03-23	15-39	9004600-1230	Cotter pin	1
	J020	03-23	15-39	11077600	End cap, CW, radial ports, gen. 1, JRR (SB-2010-002)	1
	J020	03-23	15-39	11077606	End cap, CCW, radial ports, gen. 1, JRL (SB-2010-002)	1
	J030	03-23	15-39	5000181 (9007314-1210)	Screw	4
	J050	03-23	15-39	9004700-1907	Pin	1
	J080	03-23	15-39	11039356	Flange adapter, C pad (SB-2008-052)	1
	J090	03-23	15-39	5000099 (9004100-1550)	O-ring	1
	J095	03-23	15-39	545434 (9004100-0420)	O-ring	1
	J100	03-23	15-39	5000489	Screw	6
	J110	03-23	15-39	8800406	Cover plate	1
	J120	03-23	15-39	9004100-0480	O-ring	1
	J130	03-23	15-39	9007200-5021	Screw	4
	J140	03-23	15-39	4570133	Coupling, 14 tooth	1
	J150	03-23	15-39	4800754	Lifting bracket	1
	J155	03-23	15-39	9007315-0604	Screw	1
T0CE	B095	11-45		1700256	Check valve poppet	1
	B096	11-45		1700257	Check valve spring	1
	J010	11-45		1700947	Shaft, tapered with auxiliary drive	1
	J012	11-45		5000362	Key	1
	J013	11-45		5000606	Slotted nut	1
	J014	11-45		9004600-1230	Cotter pin	1
	J020	11-45		11092368	End cap, CW, radial ports, gen. 2, JRR (SB-2010-002)	1
	J020	11-45		11086934	End cap, CCW, radial ports, gen. 2, JRL (SB-2010-002)	1
	J030	11-45		5000181 (9007314-1210)	Screw	4
	J050	11-45		9004700-1907	Pin	1
	J080	11-45		11039356	Flange adapter, C pad (SB-2008-052)	1
	J090	11-45		5000099 (9004100-1550)	O-ring	1
	J095	11-45		545434 (9004100-0420)	O-ring	1
	J100	11-45		5000489	Screw	6
	J110	11-45		8800406	Cover plate	1
	J120	11-45		9004100-0480	O-ring	1
	J130	11-45		9007200-5021	Screw	4
	J140	11-45		4570133	Coupling, 14 tooth	1
	J150	11-45		4800754	Lifting bracket	1
	J155	11-45		9007315-0604	Screw	1

Shaft, auxiliary flange and end cap

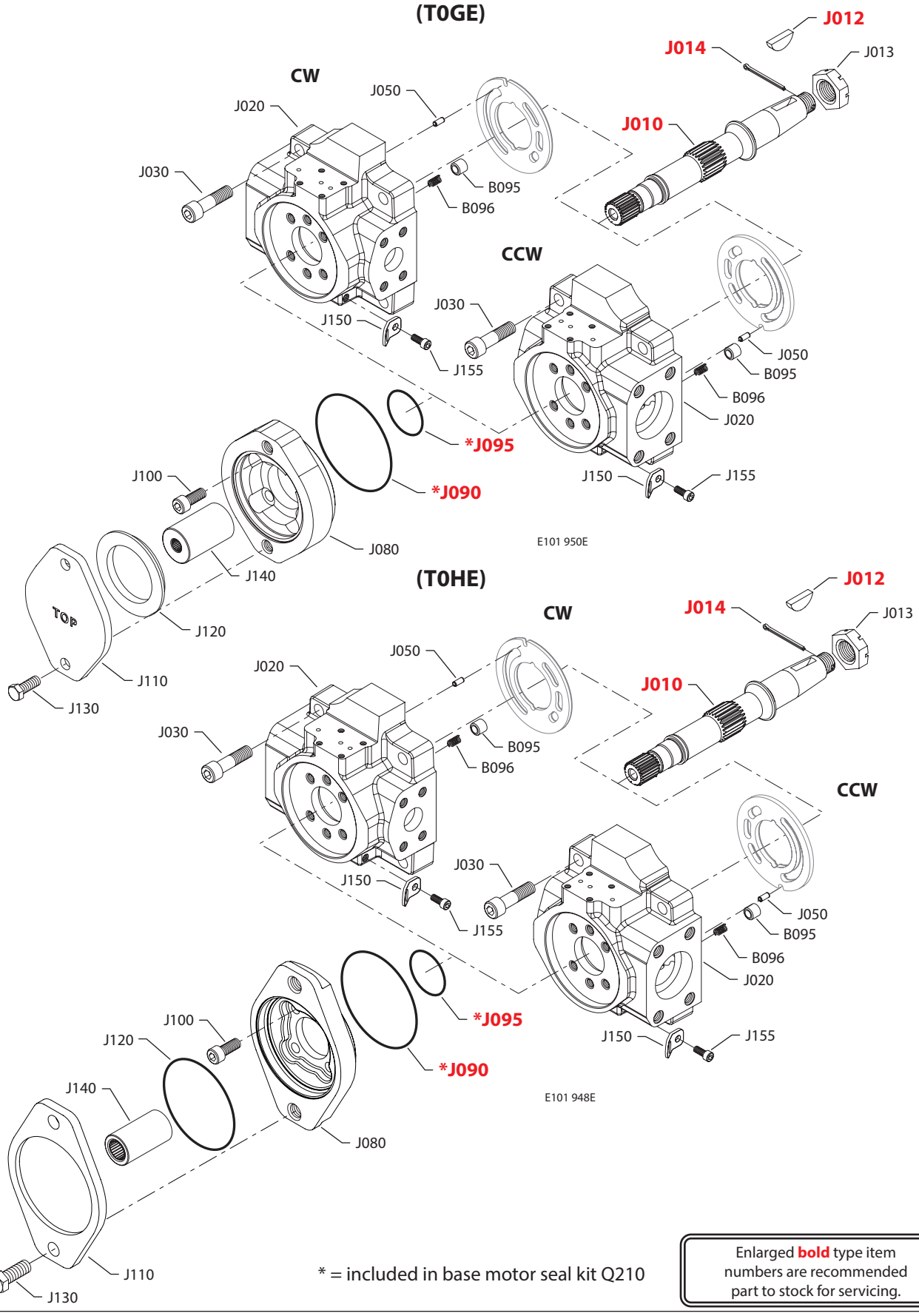

* = included in base motor seal kit Q210

Enlarged **bold** type item numbers are recommended part to stock for servicing.

Shaft, auxiliary flange and end cap

Shaft/auxiliary flange/end cap

Order code	Item	Date begin	Date end	Part number	Part name	Qty. per model/kit
T0GE	B095	11-45		1700256	Check valve poppet	1
	B096	11-45		1700257	Check valve spring	1
	J010	11-45		1700947	Shaft, tapered with auxiliary drive	1
	J012	11-45		5000362	Key	1
	J013	11-45		5000606	Slotted nut	1
	J014	11-45		9004600-1230	Cotter pin	1
	J020	11-45		11092368	End cap, CW, radial ports, gen. 2, JRR	1
	J020	11-45		11086934	End cap, CCW, radial ports, gen. 2, JRL	1
	J030	11-45		5000181 (9007314-1210)	Screw	4
	J050	11-45		9004700-1907	Pin	1
	J080	11-45		4570289	Flange adapter, A pad	1
	J090	11-45		5000099 (9004100-1550)	O-ring	1
	J095	11-45		545434 (9004100-0420)	O-ring	1
	J100	11-45		5000489	Screw	4
	J110	11-45		4460586	Cover plate	1
	J120	11-45		4800482	A pad seal	1
	J130	11-45		9007200-3712	Screw	2
	J140	11-45		1701186	Coupling, 11 tooth	1
	J150	11-45		4800754	Lifting bracket	1
	J155	11-45		9007315-0604	Screw	1
T0HE	B095	11-45		1700256	Check valve poppet	1
	B096	11-45		1700257	Check valve spring	1
	J010	11-45		1700947	Shaft, tapered with auxiliary drive	1
	J012	11-45		5000362	Key	1
	J013	11-45		5000606	Slotted nut	1
	J014	11-45		9004600-1230	Cotter pin	1
	J020	11-45		11092368	End cap, CW, radial ports, gen. 2, JRR	1
	J020	11-45		11086934	End cap, CCW, radial ports, gen. 2, JRL	1
	J030	11-45		5000181 (9007314-1210)	Screw	4
	J050	11-45		9004700-1907	Pin	1
	J080	11-45		4570210	Flange adapter, B pad	1
	J090	11-45		5000099 (9004100-1550)	O-ring	1
	J095	11-45		545434 (9004100-0420)	O-ring	1
	J100	11-45		5000489	Screw	4
	J110	11-45		4460370	Cover plate	1
	J120	11-45		9004104-0440	O-ring	1
	J130	11-45		9007200-5021	Screw	2
	J140	11-45		1701188	Coupling, 15 tooth	1
	J150	11-45		4800754	Lifting bracket	1
	J155	11-45		9007315-0604	Screw	1

Shaft, auxiliary flange and end cap

(T0N2)

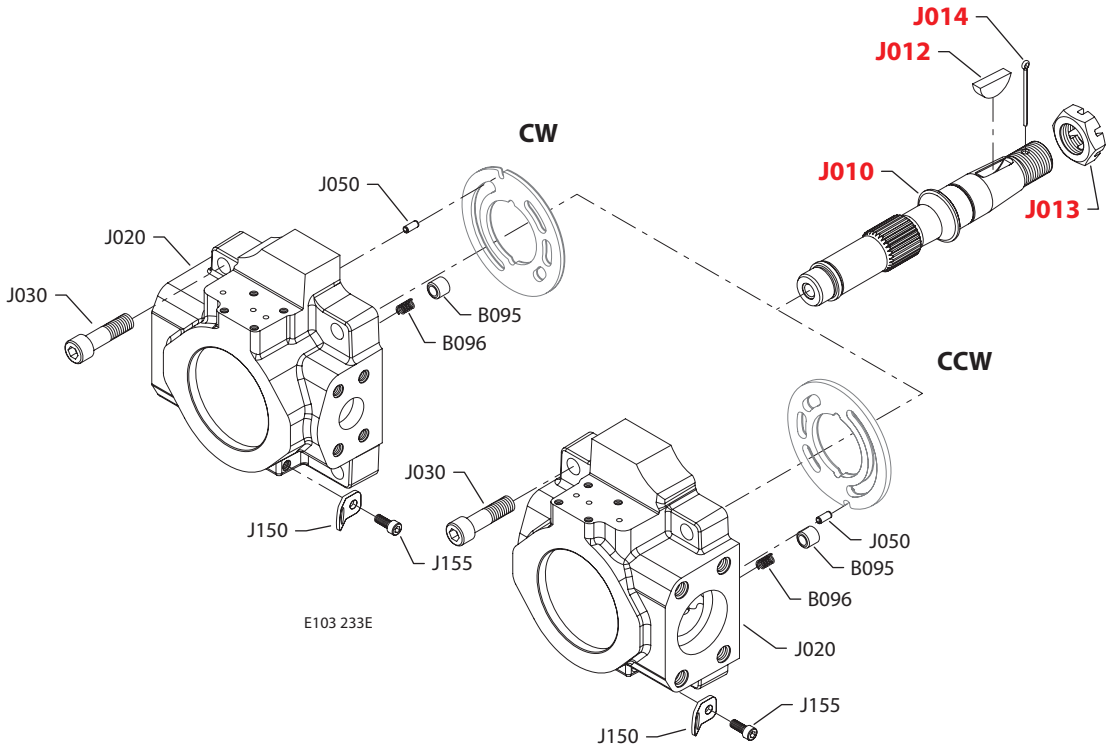

(T0N3)

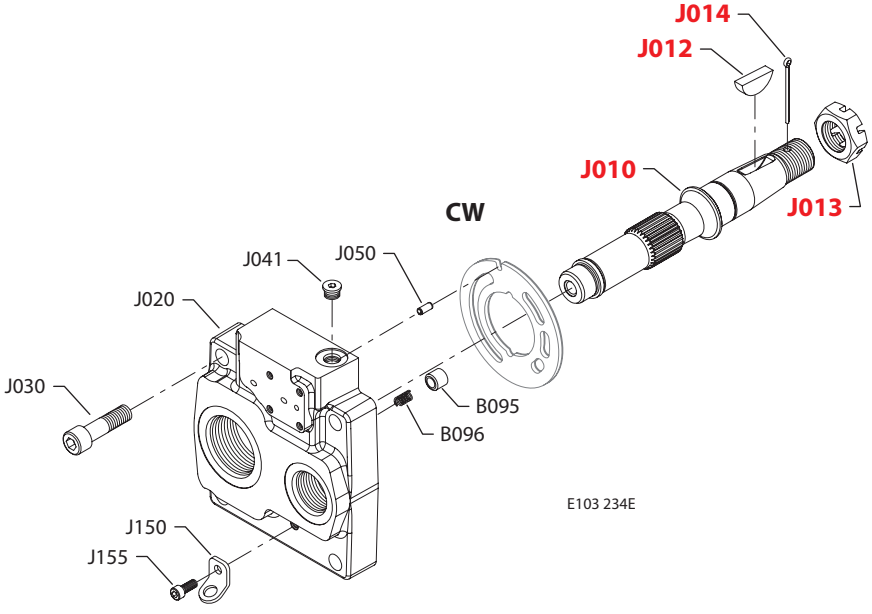

* = included in base motor seal kit Q210

Enlarged **bold** type item numbers are recommended part to stock for servicing.

Shaft, auxiliary flange and end cap

Shaft/auxiliary flange/end cap

Order code	Item	Date begin	Date end	Part number	Part name	Qty. per model/kit
T0N2	B095	11-16	15-39	1700256	Check valve poppet	1
	B096	11-16	15-39	1700257	Check valve spring	1
	J010	11-16	15-39	1701451	Shaft, tapered without auxiliary drive	1
	J012	11-16	15-39	5000362	Key	1
	J013	11-16	15-39	5000606	Slotted nut	1
	J014	11-16	15-39	9004600-1230	Cotter pin	1
	J020	11-16	15-39	11068228	End cap, CW, radial ports, gen. 1, JRR (SB-2010-002)	1
	J020	11-16	15-39	11077605	End cap, CCW, radial ports, gen. 1, JRL (SB-2010-002)	1
	J030	11-16	15-39	5000181 (9007314-1210)	Screw	4
	J050	11-16	15-39	9004700-1907	Pin	1
	J150	11-16	15-39	4800754	Lifting bracket	1
	J155	11-16	15-39	9007315-0604	Screw	1
T0N3	B095	11-45	15-36	1700256	Check valve poppet	1
	B096	11-45	15-36	1700257	Check valve spring	1
	J010	11-45	15-36	1701451	Shaft, tapered without auxiliary drive	1
	J012	11-45	15-36	5000362	Key	1
	J013	11-45	15-36	5000606	Slotted nut	1
	J014	11-45	15-36	9004600-1230	Cotter pin	1
	J020	11-45	15-36	11077590	End cap, CW, axial ports, gen. 1, JRR (SB-2010-002)	1
	J030	11-45	15-36	5000181 (9007314-1210)	Screw	4
	J041	11-45	15-36	140644 (9005110-5600)	Plug assembly	1
	J050	11-45	15-36	9004700-1907	Pin	1
	J150	11-45	15-36	4800754	Lifting bracket	1
	J155	11-45	15-36	9007315-0604	Screw	1

Shaft, auxiliary flange and end cap

(T0N4 & T0N9)

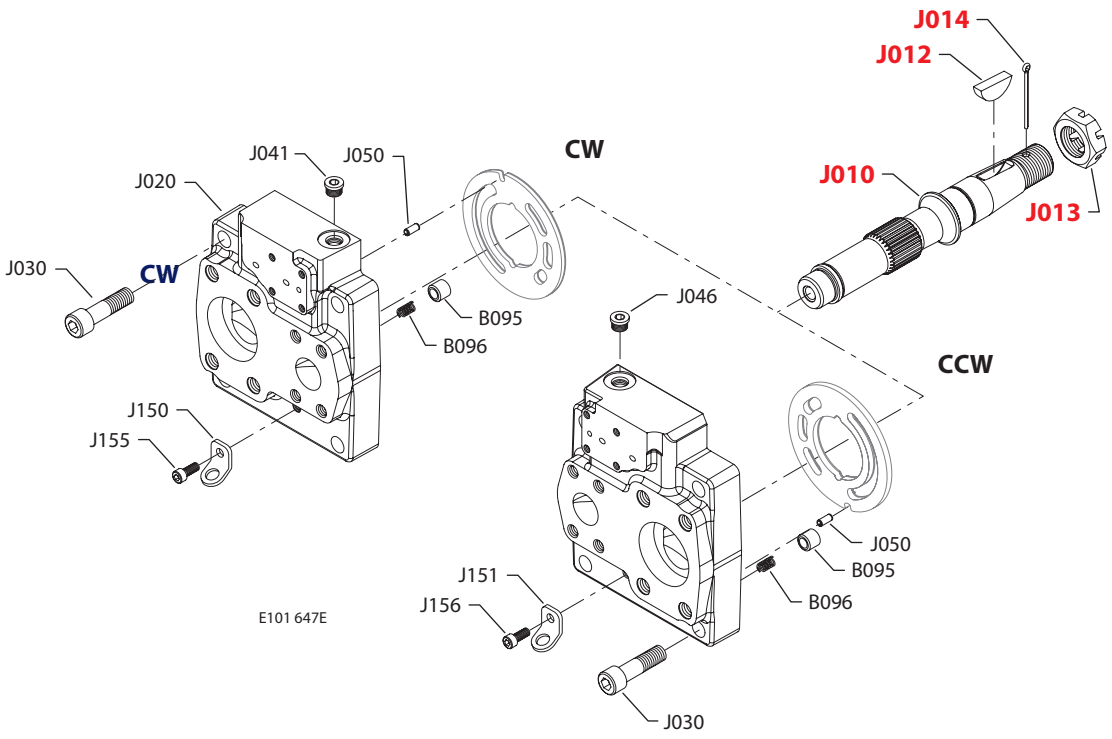

(T0NE)

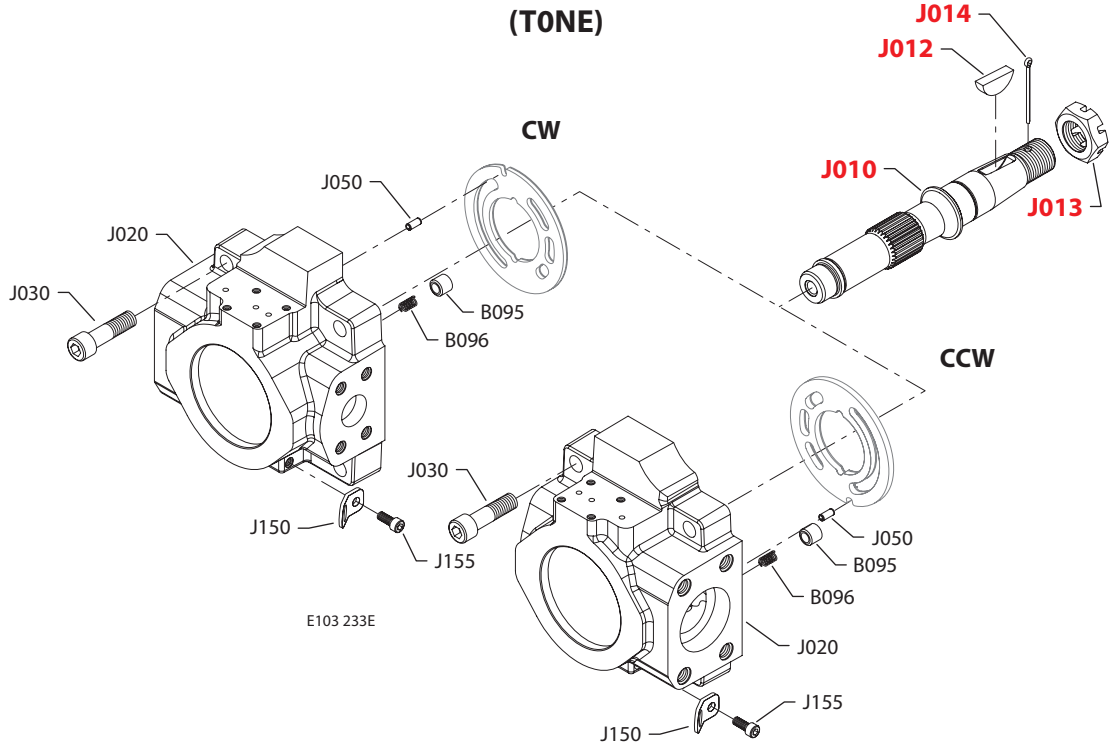

* = included in base motor seal kit Q210

Enlarged **bold** type item numbers are recommended part to stock for servicing.

Shaft, auxiliary flange and end cap

Shaft/auxiliary flange/end cap

Order code	Item	Date begin	Date end	Part number	Part name	Qty. per model/kit
T0N4	B095	03-23	15-38	1700256	Check valve poppet	1
	B096	03-23	15-38	1700257	Check valve spring	1
	J010	03-23	15-38	1701451	Shaft, tapered without auxiliary drive	1
	J012	03-23	15-38	5000362	Key	1
	J013	03-23	15-38	5000606	Slotted nut	1
	J014	03-23	15-38	9004600-1230	Cotter pin	1
	J020	03-23	15-38	11077589	End cap, CW, axial ports, gen. 1, JRR (SB-2010-002)	1
	J020	03-23	15-38	11077593	End cap, CCW, axial ports, gen. 1, JRL (SB-2010-002)	1
	J030	03-23	15-38	5000181 (9007314-1210)	Screw	4
	J041	03-23	15-38	140644 (9005110-5600)	Plug assembly, JRR	1
	J046	03-23	15-38	140644 (9005110-5600)	Plug assembly, JRL	1
	J050	03-23	15-38	9004700-1907	Pin	1
	J150	03-23	15-38	4800754	Lifting bracket, JRR	1
	J151	03-23	15-38	4800754	Lifting bracket, JRL	1
	J155	03-23	15-38	9007315-0604	Screw, JRR	1
	J156	03-23	15-38	9007315-0604	Screw, JRL	1
T0N9	B095	11-38		1700256	Check valve poppet	1
	B096	11-38		1700257	Check valve spring	1
	J010	11-38		1701451	Shaft, tapered without auxiliary drive	1
	J012	11-38		5000362	Key	1
	J013	11-38		5000606	Slotted nut	1
	J014	11-38		9004600-1230	Cotter pin	1
	J020	11-38		11095294	End cap, CW, axial ports, gen. 2, JRR	1
	J020	11-38		11095297	End cap, CCW, axial ports, gen. 2, JRL	1
	J030	11-38		5000181 (9007314-1210)	Screw	4
	J041	11-38		140644 (9005110-5600)	Plug assembly	1
	J046	11-38		140644 (9005110-5600)	Plug assembly	1
	J050	11-38		9004700-1907	Pin	1
	J150	11-38		4800754	Lifting bracket, JRR	1
	J151	11-38		4800754	Lifting bracket, JRL	1
	J155	11-38		9007315-0604	Screw, JRR	1
	J156	11-38		9007315-0604	Screw, JRL	1
T0NE	B095	11-39		1700256	Check valve poppet	1
	B096	11-39		1700257	Check valve spring	1
	J010	11-39		1701451	Shaft, tapered without auxiliary drive	1
	J012	11-39		5000362	Key	1
	J013	11-39		5000606	Slotted nut	1
	J014	11-39		9004600-1230	Cotter pin	1
	J020	11-39		11095323	End cap, CW, radial ports, gen. 2, JRR	1
	J020	11-39		11082641	End cap, CCW, radial ports, gen. 2, JRL	1
	J030	11-39		5000181 (9007314-1210)	Screw	4
	J050	11-39		9004700-1907	Pin	1
	J150	11-39		4800754	Lifting bracket	1
	J155	11-39		9007315-0604	Screw	1

Shaft, auxiliary flange and end cap

(T0NH)

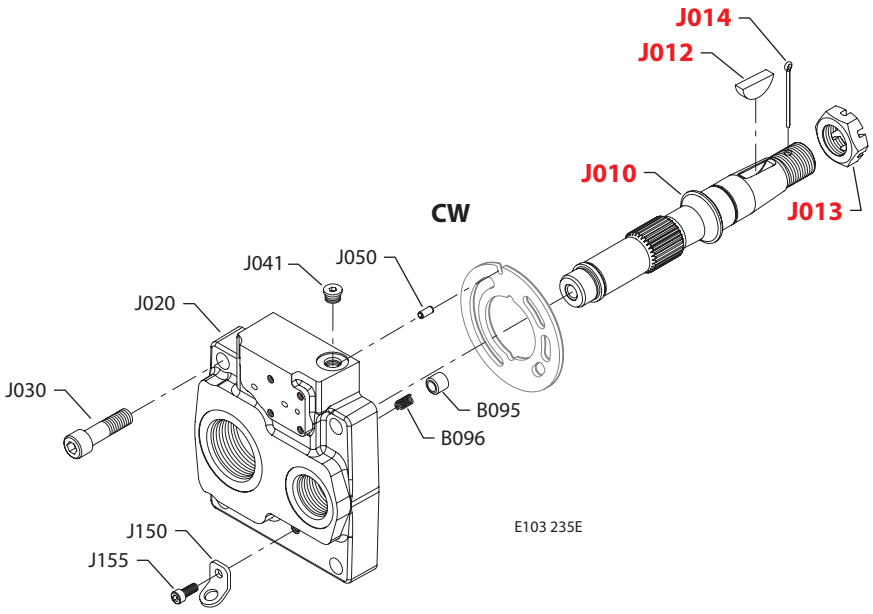

(T0NV)

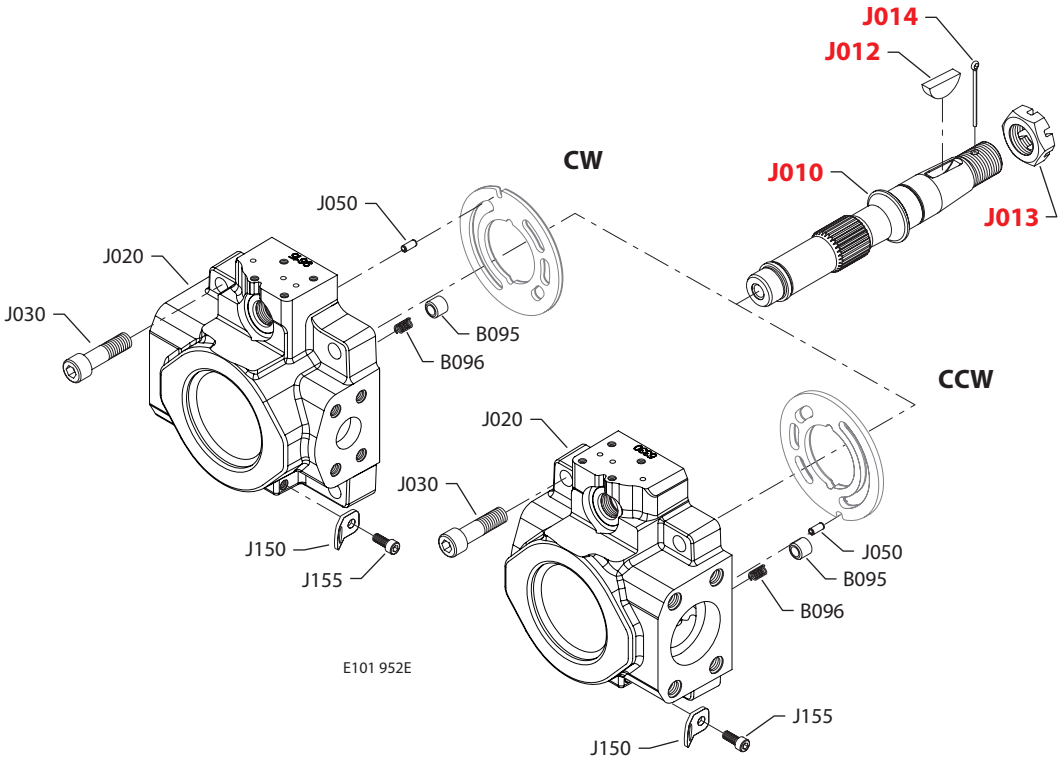

* = included in base motor seal kit Q210

Enlarged **bold** type item numbers are recommended part to stock for servicing.

Shaft, auxiliary flange and end cap

Shaft/auxiliary flange/end cap

Order code	Item	Date begin	Date end	Part number	Part name	Qty. per model/kit
T0NH	B095	03-23		1700256	Check valve poppet	1
	B096	03-23		1700257	Check valve spring	1
	J010	03-23		1701451	Shaft, tapered without auxiliary drive	1
	J012	03-23		5000362	Key	1
	J013	03-23		5000606	Slotted nut	1
	J014	03-23		9004600-1230	Cotter pin	1
	J020	03-23		11095295	End cap, CW, axial ports, gen. 2, JRR	1
	J030	03-23		5000181 (9007314-1210)	Screw	4
	J041	03-23		140644 (9005110-5600)	Plug assembly, JRR	1
	J050	03-23		9004700-1907	Pin	1
	J150	03-23		4800754	Lifting bracket, JRR	1
	J155	03-23		9007315-0604	Screw, JRR	1
T0NV	B095	11-39		1700256	Check valve poppet	1
	B096	11-39		1700257	Check valve spring	1
	J010	11-39		1701451	Shaft, tapered without auxiliary drive	1
	J012	11-39		5000362	Key	1
	J013	11-39		5000606	Slotted nut	1
	J014	11-39		9004600-1230	Cotter pin	1
	J020	11-39		11099615	End cap, CW, radial ports, DL, gen. 2, JRR	1
	J020	11-39		11095330	End cap, CCW, radial ports, DL, gen. 2, JRL	1
	J030	11-39		5000181 (9007314-1210)	Screw	4
	J050	11-39		9004700-1907	Pin	1
	J150	11-39		4800754	Lifting bracket	1
	J155	11-39		9007315-0604	Screw	1

Shaft, auxiliary flange and end cap

(T0NX)

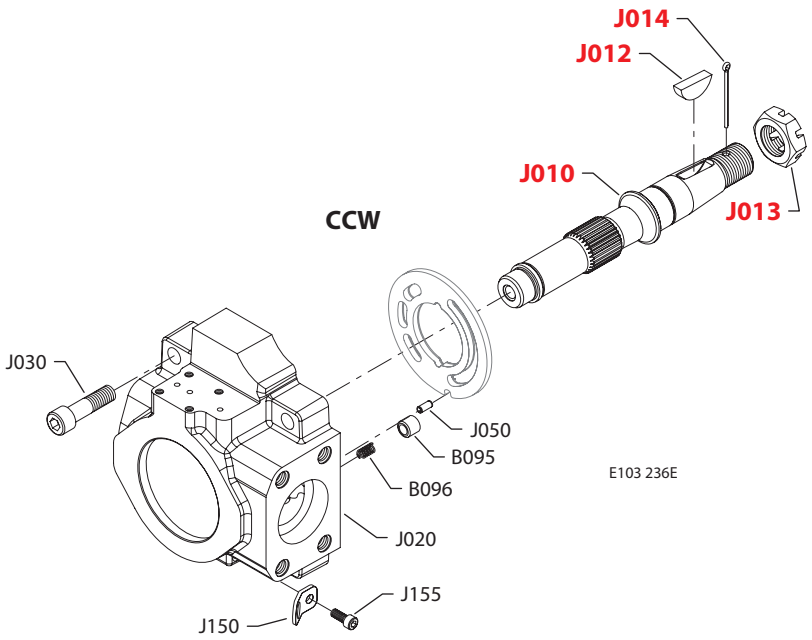

(T0NZ)

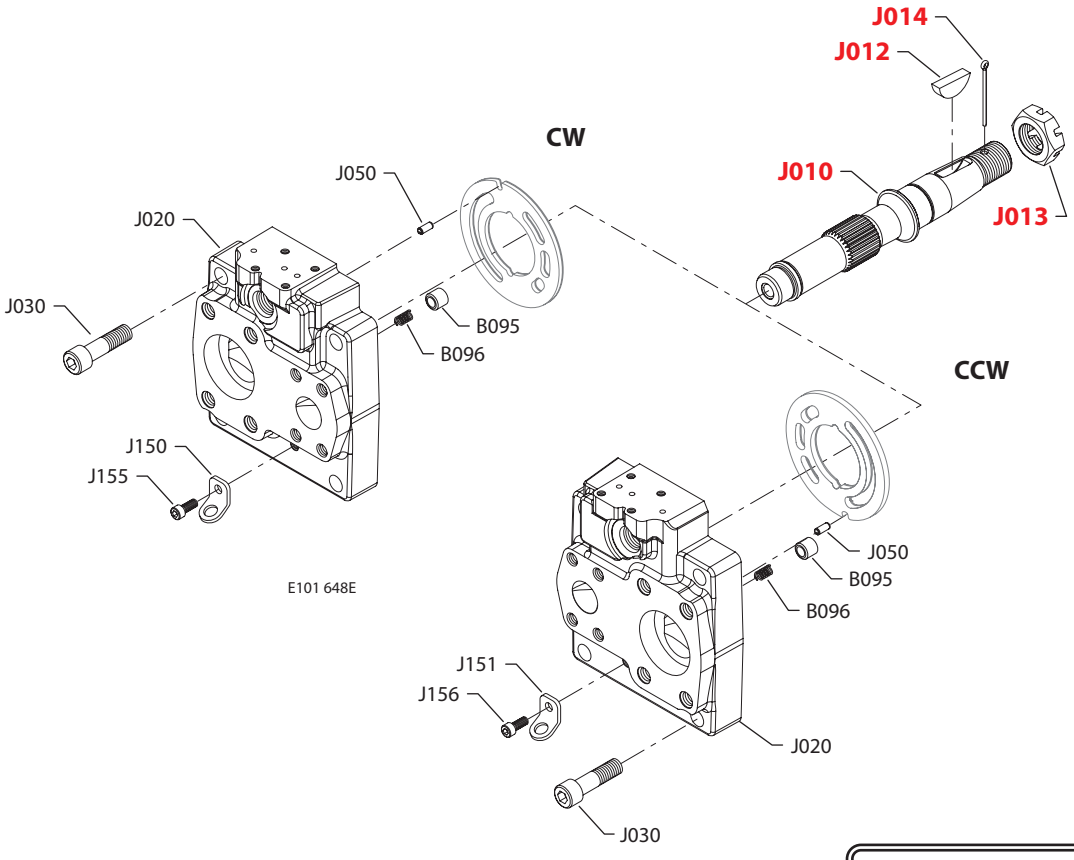

* = included in base motor seal kit Q210

Enlarged **bold** type item numbers are recommended part to stock for servicing.

Shaft, auxiliary flange and end cap

Shaft/auxiliary flange/end cap

Order code	Item	Date begin	Date end	Part number	Part name	Qty. per model/kit
T0NX	B095	14-29		1700256	Check valve poppet	1
	B096	14-29		1700257	Check valve spring	1
	J010	14-29		1701451	Shaft, tapered without auxiliary drive	1
	J012	14-29		5000362	Key	1
	J013	14-29		5000606	Slotted nut	1
	J014	14-29		9004600-1230	Cotter pin	1
	J020	14-29		11095331	End cap, CCW, radial ports, gen. 2, JRL	1
	J030	14-29		5000181 (9007314-1210)	Screw	4
	J050	14-29		9004700-1907	Pin	1
	J150	14-29		4800754	Lifting bracket	1
	J155	14-29		9007315-0604	Screw	1
T0NZ	B095	11-42		1700256	Check valve poppet	1
	B096	11-42		1700257	Check valve spring	1
	J010	11-42		1701451	Shaft, tapered without auxiliary drive	1
	J012	11-42		5000362	Key	1
	J013	11-42		5000606	Slotted nut	1
	J014	11-42		9004600-1230	Cotter pin	1
	J020	11-42		11095296	End cap, CW, axial ports, DL, gen. 2, JRR	1
	J020	11-42		11095299	End cap, CCW, axial ports, DL, gen. 2, JRL	1
	J030	11-42		5000181 (9007314-1210)	Screw	4
	J050	11-42		9004700-1907	Pin	1
	J150	11-42		4800754	Lifting bracket, JRR	1
	J151	11-42		4800754	Lifting bracket, JRL	1
	J155	11-42		9007315-0604	Screw, JRR	1
	J156	11-42		9007315-0604	Screw, JRL	1

Shaft, auxiliary flange and end cap

(T0R2 & T0RE)

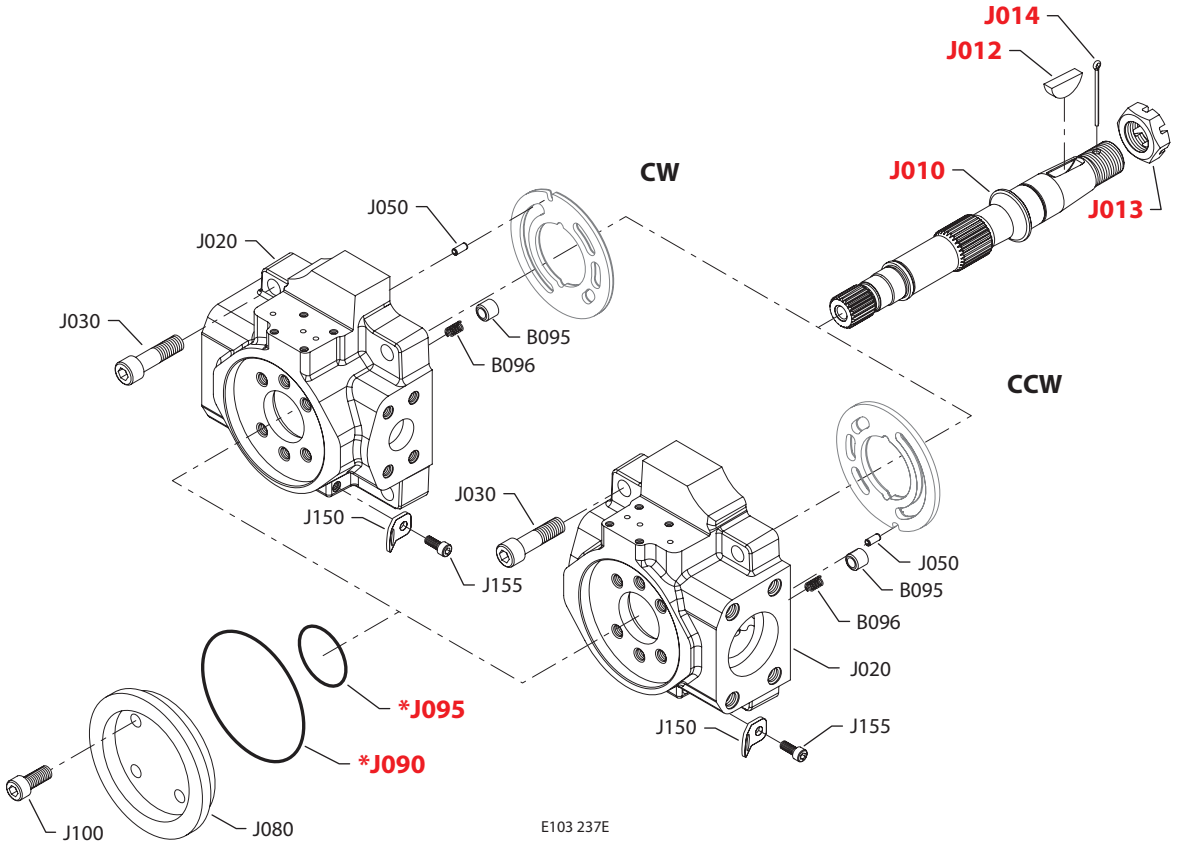

* = included in base motor seal kit Q210

Enlarged **bold** type item numbers are recommended part to stock for servicing.

Shaft, auxiliary flange and end cap

Shaft/auxiliary flange/end cap

Order code	Item	Date begin	Date end	Part number	Part name	Qty. per model/kit
T0R2	B095	08-36	15-39	1700256	Check valve poppet	1
	B096	08-36	15-39	1700257	Check valve spring	1
	J010	08-36	15-39	1700947	Shaft, tapered with auxiliary drive	1
	J012	08-36	15-39	5000362	Key	1
	J013	08-36	15-39	5000606	Slotted nut	1
	J014	08-36	15-39	9004600-1230	Cotter pin	1
	J020	08-36	15-39	11077600	End cap, CW, radial ports, gen. 1, JRR (SB-2010-002)	1
	J020	08-36	15-39	11077606	End cap, CCW, radial ports, gen. 1, JRL (SB-2010-002)	1
	J030	08-36	15-39	5000181 (9007314-1210)	Screw	4
	J050	08-36	15-39	9004700-1907	Pin	1
	J080	08-36	15-39	4570179	Running cover	1
	J090	08-36	15-39	5000099 (9004100-1550)	O-ring	1
	J095	08-36	15-39	545434 (9004104-0310)	O-ring	1
	J100	08-36	15-39	5000489	Screw	4
	J150	08-36	15-39	4800754	Lifting bracket	1
	J155	08-36	15-39	9007315-0604	Screw	1
T0RE	B095	08-36		1700256	Check valve poppet	1
	B096	08-36		1700257	Check valve spring	1
	J010	08-36		1700947	Shaft, tapered with auxiliary drive	1
	J012	08-36		5000362	Key	1
	J013	08-36		5000606	Slotted nut	1
	J014	08-36		9004600-1230	Cotter pin	1
	J020	08-36		11092368	End cap, CW, radial ports, gen. 2, JRR	1
	J020	08-36		11086934	End cap, CCW, radial ports, gen. 2, JRL	1
	J030	08-36		5000181 (9007314-1210)	Screw	4
	J050	08-36		9004700-1907	Pin	1
	J080	08-36		4570179	Running cover	1
	J090	08-36		5000099 (9004100-1550)	O-ring	1
	J095	08-36		545434 (9004104-0310)	O-ring	1
	J100	08-36		5000489	Screw	4
	J150	08-36		4800754	Lifting bracket	1
	J155	08-36		9007315-0604	Screw	1

Shaft, auxiliary flange and end cap

(T0T2 & T0TE)

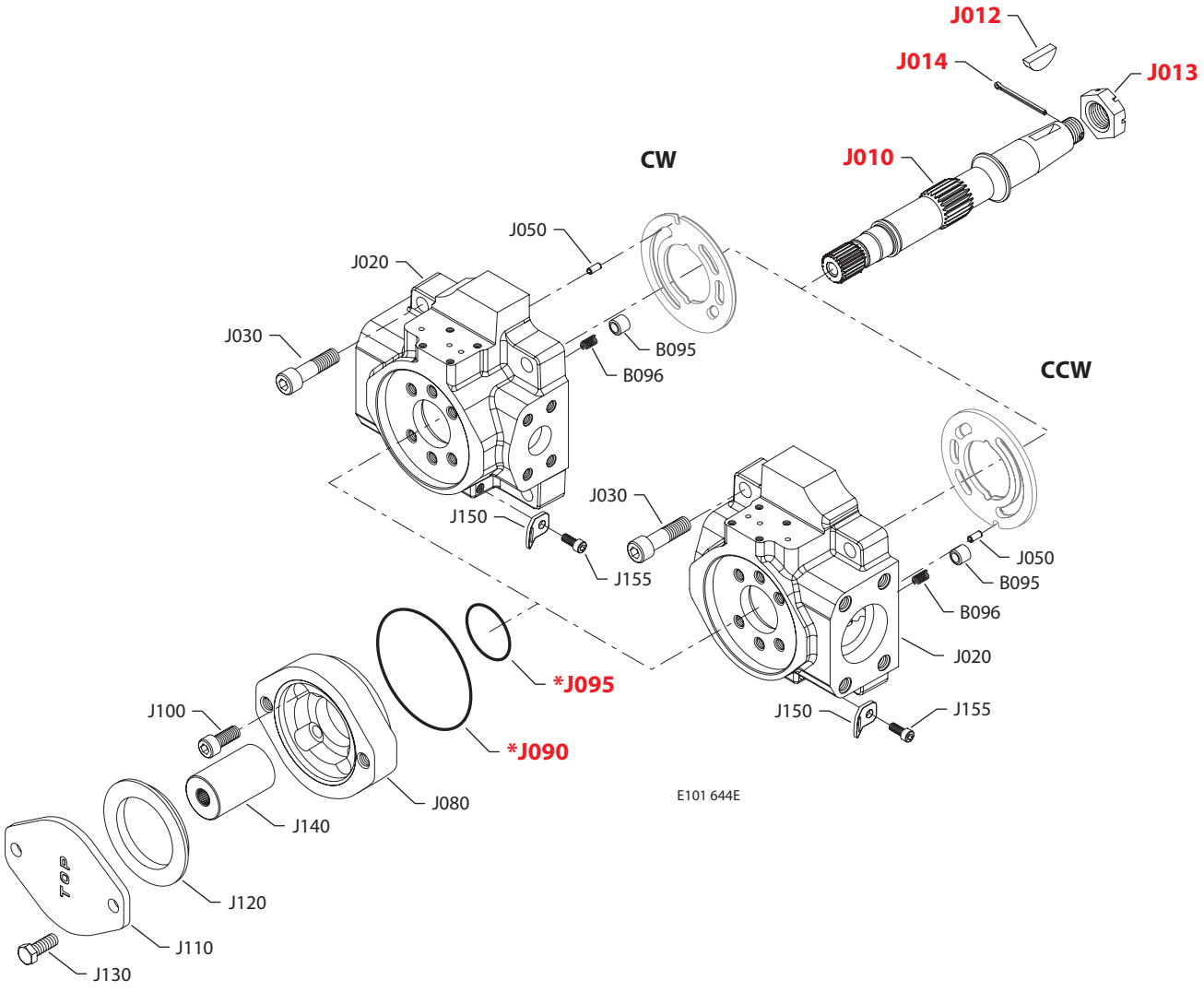

* = included in base motor seal kit Q210

Enlarged **bold** type item numbers are recommended part to stock for servicing.

Shaft, auxiliary flange and end cap

Shaft/auxiliary flange/end cap

Order code	Item	Date begin	Date end	Part number	Part name	Qty. per model/kit
T0T2	B095	03-23	15-39	1700256	Check valve poppet	1
	B096	03-23	15-39	1700257	Check valve spring	1
	J010	03-23	15-39	1700947	Shaft, tapered with auxiliary drive	1
	J012	03-23	15-39	5000362	Key	1
	J013	03-23	15-39	5000606	Slotted nut	1
	J014	03-23	15-39	9004600-1230	Cotter pin	1
	J020	03-23	15-39	11077600	End cap, CW, radial ports, gen. 1, JRR (SB-2010-002)	1
	J030	03-23	15-39	5000181 (9007314-1210)	Screw	4
	J050	03-23	15-39	9004700-1907	Pin	1
	J080	03-23	15-39	4570289	Flange adapter, A pad	1
	J090	03-23	15-39	5000099 (9004100-1550)	O-ring	1
	J095	03-23	15-39	545434 (9004100-0420)	O-ring	1
	J100	03-23	15-39	5000489	Screw	4
	J110	03-23	15-39	4460586	Cover plate	1
	J120	03-23	15-39	4800482	A pad seal	1
	J130	03-23	15-39	9007200-3712	Screw	2
	J140	03-23	15-39	1701186	Coupling, 11 tooth	1
	J150	03-23	15-39	4800754	Lifting bracket	1
	J155	03-23	15-39	9007315-0604	Screw	1
T0TE	B095	03-23		1700256	Check valve poppet	1
	B096	03-23		1700257	Check valve spring	1
	J010	03-23		1700947	Shaft, tapered with auxiliary drive	1
	J012	03-23		5000362	Key	1
	J013	03-23		5000606	Slotted nut	1
	J014	03-23		9004600-1230	Cotter pin	1
	J020	03-23		11092368	End cap, CW, radial ports, gen. 2, JRR	1
	J020	03-23		11086934	End cap, CCW, radial ports, gen. 2, JRL	1
	J030	03-23		5000181 (9007314-1210)	Screw	4
	J050	03-23		9004700-1907	Pin	1
	J080	03-23		4570289	Flange adapter, A pad	1
	J090	03-23		5000099 (9004100-1550)	O-ring	1
	J095	03-23		545434 (9004100-0420)	O-ring	1
	J100	03-23		5000489	Screw	4
	J110	03-23		4460586	Cover plate	1
	J120	03-23		4800482	A pad seal	1
	J130	03-23		9007200-3712	Screw	2
	J140	03-23		1701186	Coupling, 11 tooth	1
	J150	03-23		4800754	Lifting bracket	1
	J155	03-23		9007315-0604	Screw	1

Shaft, auxiliary flange and end cap

(T0V2 & T0VE)

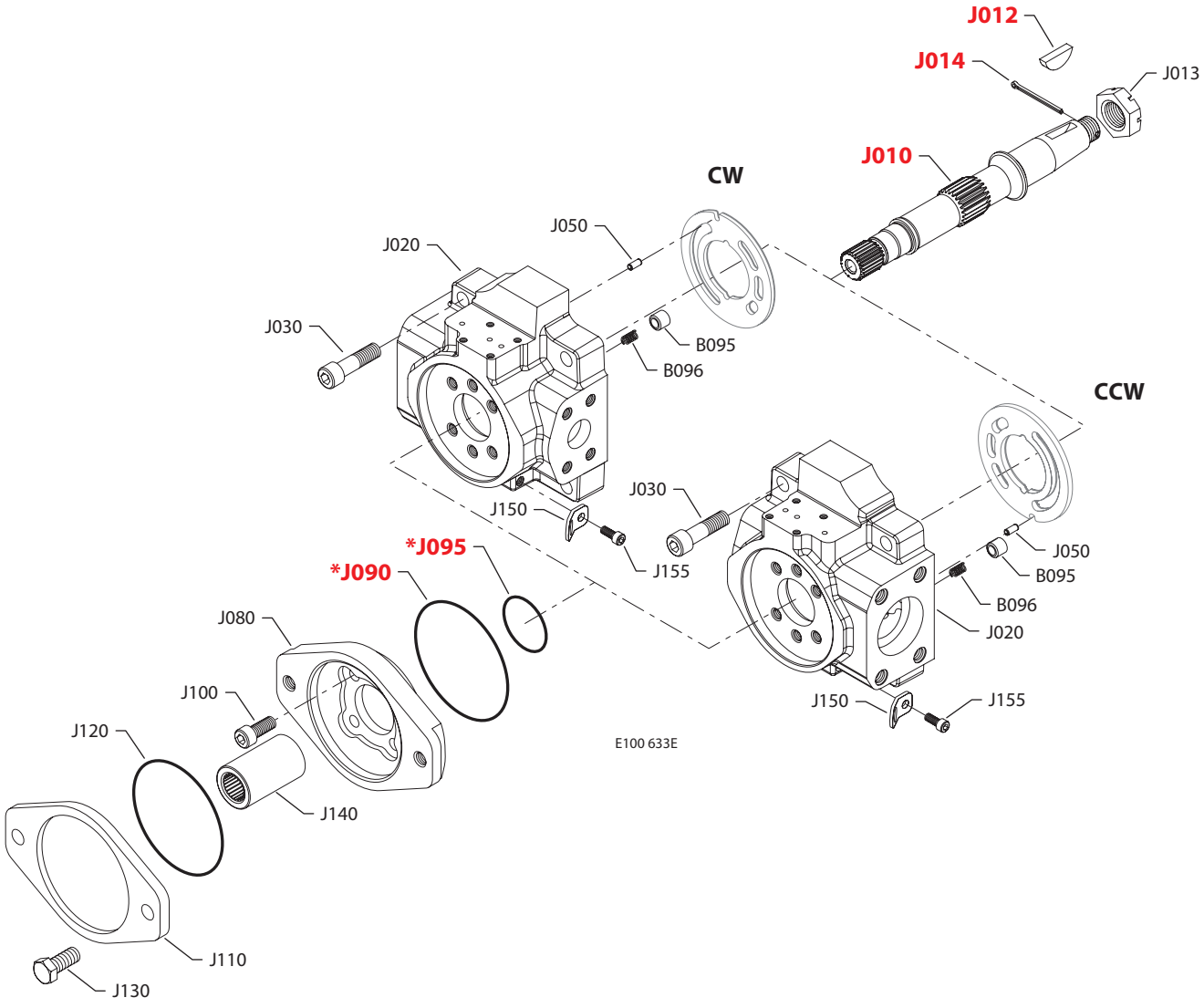

* = included in base motor seal kit Q210

Enlarged **bold** type item numbers are recommended part to stock for servicing.

Shaft, auxiliary flange and end cap

Shaft/auxiliary flange/end cap

Order code	Item	Date begin	Date end	Part number	Part name	Qty. per model/kit
T0V2	B095	03-23	15-39	1700256	Check valve poppet	1
	B096	03-23	15-39	1700257	Check valve spring	1
	J010	03-23	15-39	1700947	Shaft, tapered with auxiliary drive	1
	J012	03-23	15-39	5000362	Key	1
	J013	03-23	15-39	5000606	Slotted nut	1
	J014	03-23	15-39	9004600-1230	Cotter pin	1
	J020	03-23	15-39	11077606	End cap, CCW, radial ports, gen. 1, JRL (SB-2010-002)	1
	J030	03-23	15-39	5000181 (9007314-1210)	Screw	4
	J050	03-23	15-39	9004700-1907	Pin	1
	J080	03-23	15-39	4570210	Flange adapter, B pad	1
	J090	03-23	15-39	5000099 (9004100-1550)	O-ring	1
	J095	03-23	15-39	545434 (9004100-0420)	O-ring	1
	J100	03-23	15-39	5000489	Screw	4
	J110	03-23	15-39	4460370	Cover plate	1
	J120	03-23	15-39	9004104-0440	O-ring	1
	J130	03-23	15-39	9007200-5021	Screw	2
	J140	03-23	15-39	1701188	Coupling, 15 tooth	1
	J150	03-23	15-39	4800754	Lifting bracket	1
	J155	03-23	15-39	9007315-0604	Screw	1
T0VE	B095	10-41		1700256	Check valve poppet	1
	B096	10-41		1700257	Check valve spring	1
	J010	10-41		1700947	Shaft, tapered with auxiliary drive	1
	J012	10-41		5000362	Key	1
	J013	10-41		5000606	Slotted nut	1
	J014	10-41		9004600-1230	Cotter pin	1
	J020	10-41		11092368	End cap, CW, radial ports, gen. 2, JRR (SB-2010-002)	1
	J020	10-41		11086934	End cap, CCW, radial ports, gen. 2, JRL (SB-2010-002)	1
	J030	10-41		5000181 (9007314-1210)	Screw	4
	J050	10-41		9004700-1907	Pin	1
	J080	10-41		4570210	Flange adapter, B pad	1
	J090	10-41		5000099 (9004100-1550)	O-ring	1
	J095	10-41		545434 (9004100-0420)	O-ring	1
	J100	10-41		5000489	Screw	4
	J110	10-41		4460370	Cover plate	1
	J120	10-41		9004104-0440	O-ring	1
	J130	10-41		9007200-5021	Screw	2
	J140	10-41		1701188	Coupling, 15 tooth	1
	J150	10-41		4800754	Lifting bracket	1
	J155	10-41		9007315-0604	Screw	1

Shaft, auxiliary flange and end cap

(T0VF)

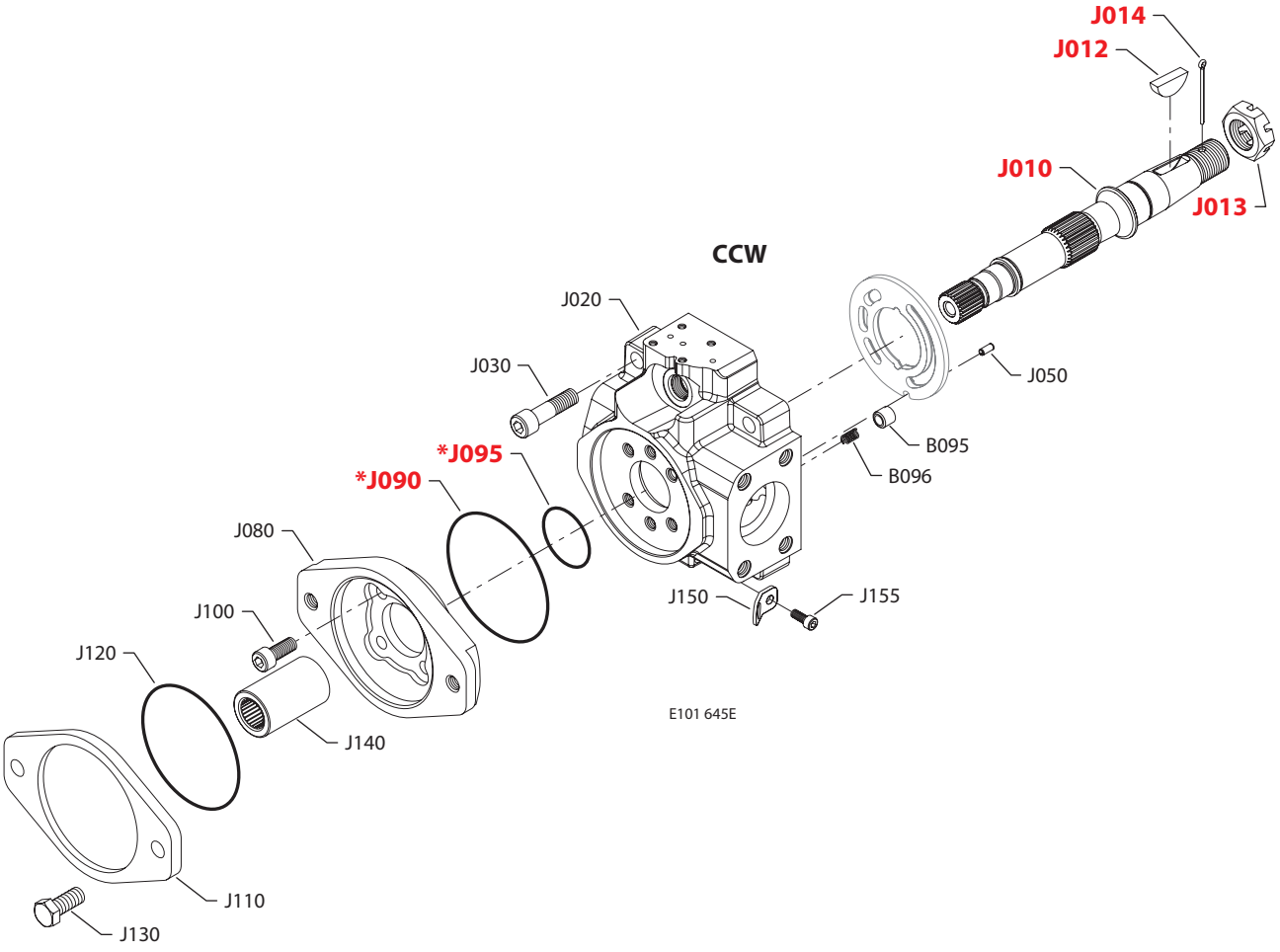

* = included in base motor seal kit Q210

Enlarged **bold** type item numbers are recommended part to stock for servicing.

Shaft, auxiliary flange and end cap

Shaft/auxiliary flange/end cap

Order code	Item	Date begin	Date end	Part number	Part name	Qty. per model/kit
T0VF	B095	12-23		1700256	Check valve poppet	1
	B096	12-23		1700257	Check valve spring	1
	J010	12-23		1700947	Shaft, tapered with auxiliary drive	1
	J012	12-23		5000362	Key	1
	J013	12-23		5000606	Slotted nut	1
	J014	12-23		9004600-1230	Cotter pin	1
	J020	12-23		11086919	End cap, CCW, radial ports, gen. 2, JRL	1
	J030	12-23		9007314-1210	Screw	4
	J050	12-23		9004700-1907	Pin	1
	J080	12-23		4570210	Flange adapter, B pad	1
	J090	12-23		5000099 (9004100-1550)	O-ring	1
	J095	12-23		545434 (9004100-0420)	O-ring	1
	J100	12-23		5000489	Screw	4
	J110	12-23		4460370	Cover plate	1
	J120	12-23		9004104-0440	O-ring	1
	J130	12-23		9007200-5021	Screw	2
	J140	12-23		1701188	Coupling, 15 tooth	1
	J150	12-23		4800754	Lifting bracket	1
	J155	12-23		9007315-0604	Screw	1

Shaft, auxiliary flange and end cap

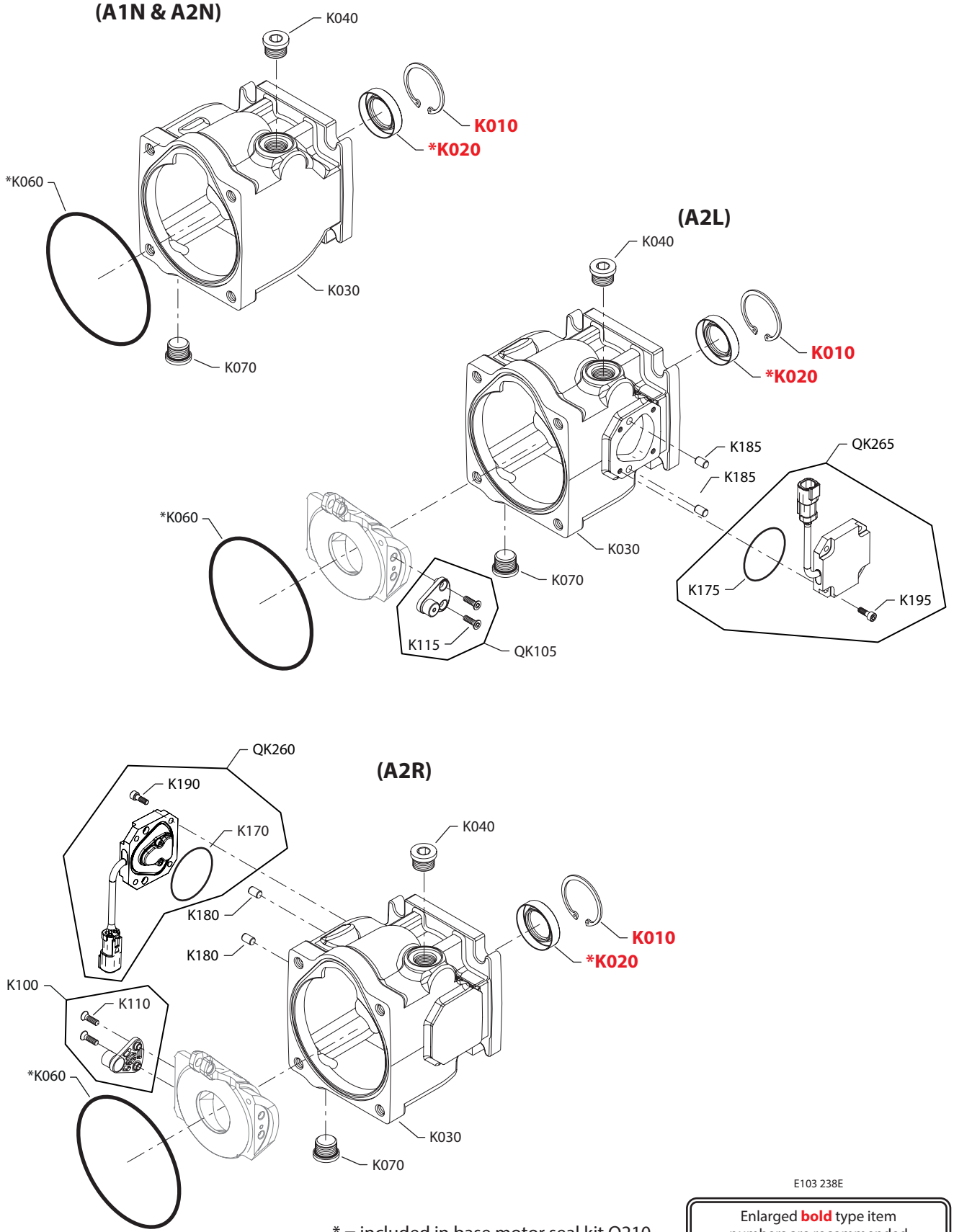

E103 238E

* = included in base motor seal kit Q210

Enlarged **bold** type item numbers are recommended part to stock for servicing.

Shaft, auxiliary flange and end cap

Housing/shaft seal

Order code	Item	Date begin	Date end	Part number	Part name	Qty. per model/kit
A1N	K010	03-23	07-08	016014 (9006200-0206)	Retaining ring	1
	K020	03-23	07-08	5000702	Lip seal (SB-2006-005)	1
	K030	03-23	07-08	11085740	Housing, 4-bolt, C flange (SB-2011-033)	1
	K040	03-23	07-08	315325 (9005110-8700)	Plug assembly	1
	K060	03-23	07-08	1700721	End cap seal	1
	K070	03-23	07-08	315325 (9005110-8700)	Plug assembly	1
A2L	K010	14-30		016014 (9006200-0206)	Retaining ring	1
	K020	14-30		5000702	Lip seal (SB-2006-005)	1
	K030	14-30		11134887	Housing, 4-bolt, C flange, angle sensor left	1
	K040	14-30		315325 (9005110-8700)	Plug assembly	1
	K060	14-30		1700721	End cap seal	1
	K070	14-30		315325 (9005110-8700)	Plug assembly	1
	K115	14-30		11137909	Screw, special w/scotch grip	2
	K175	14-30		9004104-0350	O-ring	1
	K185	14-30		11137294	Bushing	2
	K195	14-30		9007315-0504	Screw, M5	4
	QK105	14-30		11153285	Magnetic carrier kit	1
	QM265	14-30		11153284	Angle sensor kit	1
A2N	K010	05-32		016014 (9006200-0206)	Retaining ring	1
	K020	05-32		5000702	Lip seal (SB-2006-005)	1
	K030	05-32		11085740	Housing, 4-bolt, C flange (SB-2011-033)	1
	K040	05-32		315325 (9005110-8700)	Plug assembly	1
	K060	05-32		1700721	End cap seal	1
	K070	05-32		315325 (9005110-8700)	Plug assembly	1
A2R	K010	14-30		016014 (9006200-0206)	Retaining ring	1
	K020	14-30		5000702	Lip seal (SB-2006-005)	1
	K030	14-30		11135437	Housing, 4-bolt, C flange, angle sensor right	1
	K040	14-30		315325 (9005110-8700)	Plug assembly	1
	K060	14-30		1700721	End cap seal	1
	K070	14-30		315325 (9005110-8700)	Plug assembly	1
	K110	14-30		11137909	Screw, special w/scotch grip	2
	K170	14-30		9004104-0350	O-ring	1
	K180	14-30		11137294	Bushing	2
	K190	14-30		9007315-0504	Screw, M5	4
	QK100	14-30		11153285	Magnetic carrier kit	1
	QM260	14-30		11153284	Angle sensor kit	1

Shaft, auxiliary flange and end cap

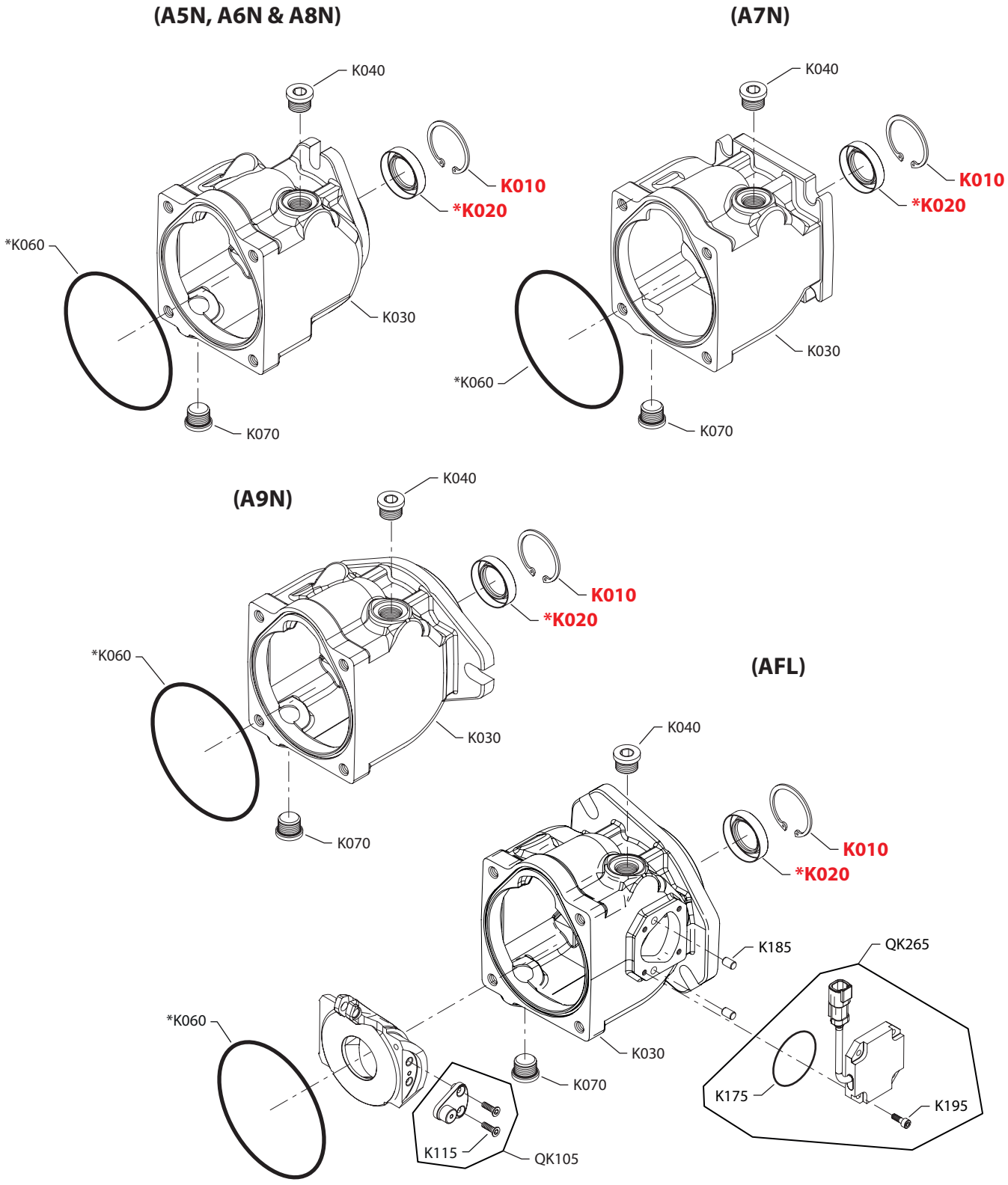

E101 649E

* = included in base motor seal kit Q210

Enlarged **bold** type item numbers are recommended part to stock for servicing.

Shaft, auxiliary flange and end cap

Housing/shaft seal

Order code	Item	Date begin	Date end	Part number	Part name	Qty. per model/kit
A5N	K010	04-21		016014 (9006200-0206)	Retaining ring	1
	K020	04-21		5000702	Lip seal (SB-2006-005)	1
	K030	04-21		11085743	Housing, 2-bolt, , B flange (SB-2011-033)	1
	K040	04-21		5000439	Plug assembly	1
	K060	04-21		1700721	End cap seal	1
	K070	04-21		5000439	Plug assembly	1
A6N	K010	03-23	07-08	016014 (9006200-0206)	Retaining ring	1
	K020	03-23	07-08	5000702	Lip seal (SB-2006-005)	1
	K030	03-23	07-08	11085741	Housing, 2-bolt, B flange (SB-2011-033)	1
	K040	03-23	07-08	315325 (9005110-8700)	Plug assembly	1
	K060	03-23	07-08	1700721	End cap seal	1
	K070	03-23	07-08	315325 (9005110-8700)	Plug assembly	1
A7N	K010	05-39		016014 (9006200-0206)	Retaining ring	1
	K020	05-39		5000702	Lip seal (SB-2006-005)	1
	K030	05-39		11085744	Housing, 4-bolt, , C flange (SB-2011-033)	1
	K040	05-39		5000439	Plug assembly	1
	K060	05-39		1700721	End cap seal	1
	K070	05-39		5000439	Plug assembly	1
A8N	K010	04-26		016014 (9006200-0206)	Retaining ring	1
	K020	04-26		5000702	Lip seal (SB-2006-005)	1
	K030	04-26		11085741	Housing, 2-bolt, B flange (SB-2011-033)	1
	K040	04-26		315325 (9005110-8700)	Plug assembly	1
	K060	04-26		1700721	End cap seal	1
	K070	04-26		315325 (9005110-8700)	Plug assembly	1
A9N	K010	04-14		016014 (9006200-0206)	Retaining ring	1
	K020	04-14		5000702	Lip seal (SB-2006-005)	1
	K030	04-14		11085742	Housing 2-bolt, C flange (SB-2011-033)	1
	K040	04-14		315325 (9005110-8700)	Plug assembly	1
	K060	04-14		1700721	End cap seal	1
	K070	04-14		315325 (9005110-8700)	Plug assembly	1
AFL	K010	14-30		016014 (9006200-0206)	Retaining ring	1
	K020	14-30		5000702	Lip seal (SB-2006-005)	1
	K030	14-30		11135438	Housing, 2-bolt, C flange, angle sensor left	1
	K040	14-30		315325 (9005110-8700)	Plug assembly	1
	K060	14-30		1700721	End cap seal	1
	K070	14-30		315325 (9005110-8700)	Plug assembly	1
	K115	14-30		11137909	Screw, special w/scotch grip	2
	K175	14-30		9004104-0350	O-ring	1
	K185	14-30		11137294	Bushing	2
	K195	14-30		9007315-0504	Screw, M5	4
	QK105	14-30		11153285	Magnetic carrier kit	1
	QM265	14-30		11153284	Angle sensor kit	1

Shaft, auxiliary flange and end cap

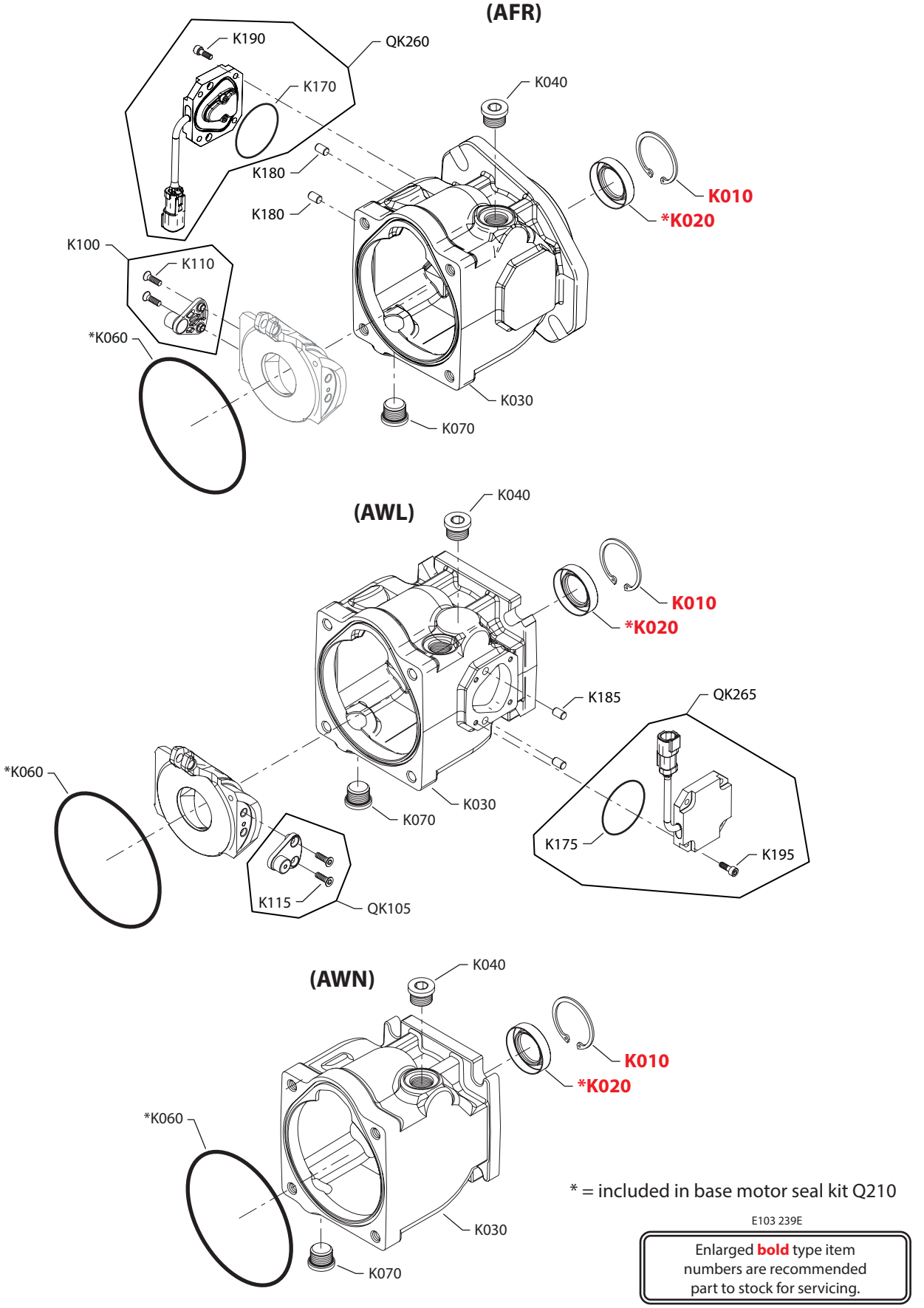

* = included in base motor seal kit Q210

E103 239E

Enlarged **bold** type item numbers are recommended part to stock for servicing.

Shaft, auxiliary flange and end cap

Housing/shaft seal

Order code	Item	Date begin	Date end	Part number	Part name	Qty. per model/kit
AFR	K010	14-30		016014 (9006200-0206)	Retaining ring	1
	K020	14-30		5000702	Lip seal (SB-2006-005)	1
	K030	14-30		11135439	Housing, 2-bolt, C flange, angle sensor right	1
	K040	14-30		315325 (9005110-8700)	Plug assembly	1
	K060	14-30		1700721	End cap seal	1
	K070	14-30		315325 (9005110-8700)	Plug assembly	1
	K110	14-30		11137909	Screw, special w/scotch grip	2
	K170	14-30		9004104-0350	O-ring	1
	K180	14-30		11137294	Bushing	2
	K190	14-30		9007315-0504	Screw, M5	4
	QK100	14-30		11153285	Magnetic carrier kit	1
	QM260	14-30		11153284	Angle sensor kit	1
AWL	K010	14-43		016014 (9006200-0206)	Retaining ring	1
	K020	14-43		5000702	Lip seal	1
	K030	14-43		11152584	Housing, 4-bolt, B flange, angle sensor left	1
	K040	14-43		315325 (9005110-8700)	Plug assembly	1
	K060	14-43		1700721	End cap seal	1
	K070	14-43		315325 (9005110-8700)	Plug assembly	1
	K115	14-43		11137909	Screw, special w/scotch grip	2
	K175	14-43		9004104-0350	O-ring	1
	K185	14-43		11137294	Bushing	2
	K195	14-43		9007315-0504	Screw, M5	4
	QK105	14-43		11153285	Magnetic carrier kit	1
	QM265	14-43		11153284	Angle sensor kit	1
AWN	K010	14-23		016014 (9006200-0206)	Retaining ring	1
	K020	14-23		5000702	Lip seal	1
	K030	14-23		11117575	Housing, 4-bolt, B flange	1
	K040	14-23		315325 (9005110-8700)	Plug assembly	1
	K060	14-23		1700721	End cap seal	1
	K070	14-23		315325 (9005110-8700)	Plug assembly	1

Shaft, auxiliary flange and end cap

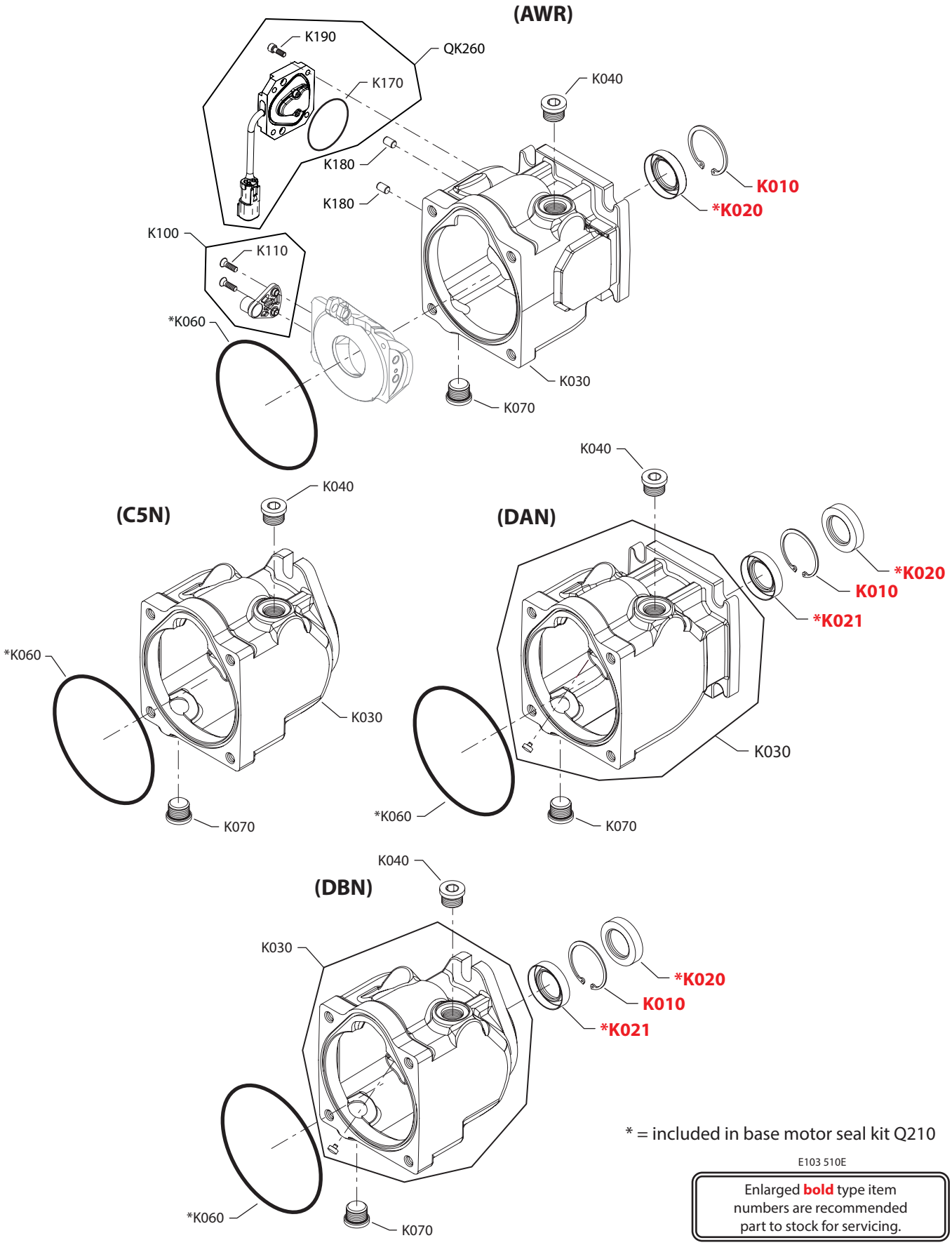

* = included in base motor seal kit Q210

E103 510E

Enlarged **bold** type item numbers are recommended part to stock for servicing.

Shaft, auxiliary flange and end cap

Housing/shaft seal

Order code	Item	Date begin	Date end	Part number	Part name	Qty. per model/kit
AWR	K010	14-43		016014 (9006200-0206)	Retaining ring	1
	K020	14-43		5000702	Lip seal	1
	K030	14-43		11152583	Housing, 4-bolt, B flange, angle sensor right	1
	K040	14-43		315325 (9005110-8700)	Plug assembly	1
	K060	14-43		1700721	End cap seal	1
	K070	14-43		315325 (9005110-8700)	Plug assembly	1
	K110	14-43		11137909	Screw, special w/scotch grip	2
	K170	14-43		9004104-0350	O-ring	1
	K180	14-43		11137294	Bushing	2
	K190	14-43		9007315-0504	Screw, M5	4
	QK100	14-43		11153285	Magnetic carrier kit	1
	QM260	14-43		11153284	Angle sensor kit	1
C5N	K030	12-07		11085743	Housing, 2-bolt, B flange, metric	1
	K040	12-07		5000439	Plug assembly	1
	K060	12-07		1700721	End cap seal	1
	K070	12-07		5000439	Plug assembly	1
DAN	K010	08-24		11051002	Retaining ring	1
	K020	08-24		5000702	Lip seal	1
	K021	08-24		5000702	Lip seal	1
	K030	08-24		11085746	Housing, 4-bolt, C flange (SB-2011-033)	1
	K040	08-24		315325 (9005110-8700)	Plug assembly	1
	K060	08-24		1700721	End cap seal	1
	K070	08-24		315325 (9005110-8700)	Plug assembly	1
DBN	K010	11-18		11051002	Retaining ring	1
	K020	11-18		5000702	Lip seal	1
	K021	11-18		5000702	Lip seal	1
	K030	11-18		11090463	Housing, 2-bolt, B flange (SB-2011-033)	1
	K040	11-18		315325 (9005110-8700)	Plug assembly	1
	K060	11-18		1700721	End cap seal	1
	K070	11-18		315325 (9005110-8700)	Plug assembly	1

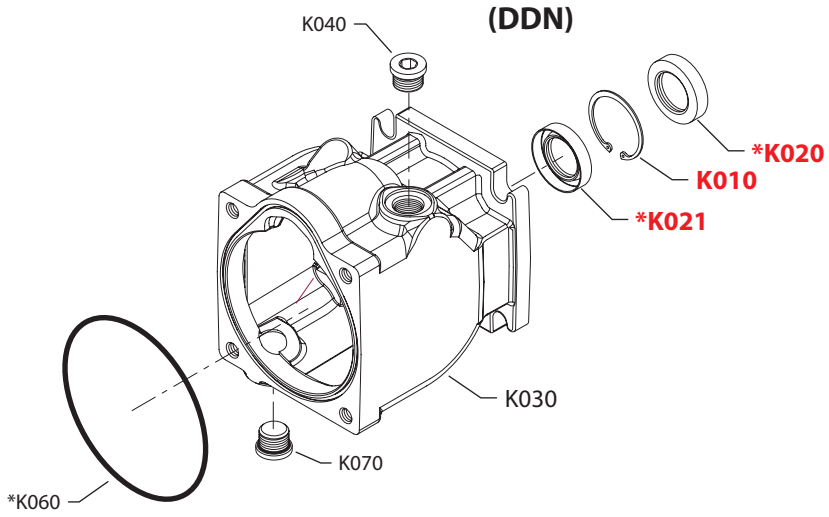

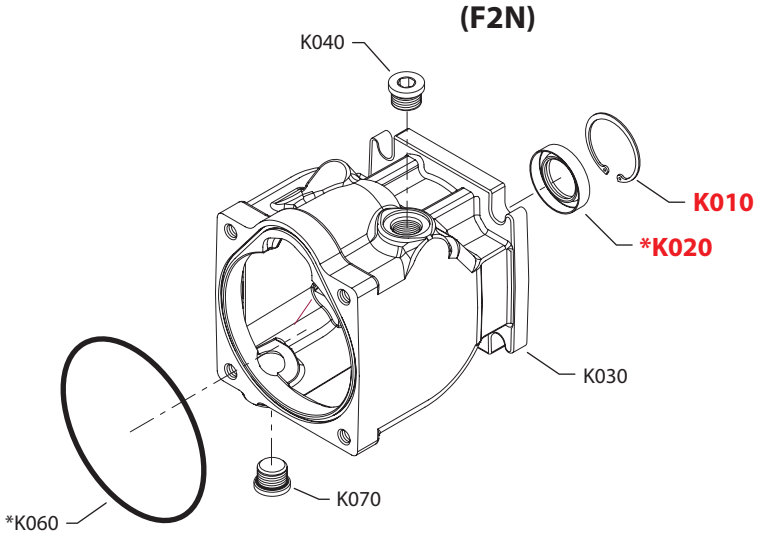

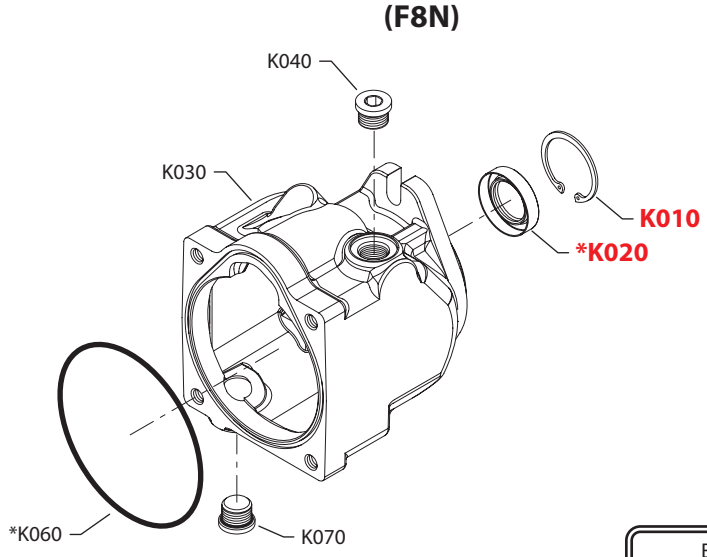

* = included in base motor seal kit Q210

E101 650E

Enlarged **bold** type item numbers are recommended part to stock for servicing.

Housing/shaft seal

Order code	Item	Date begin	Date end	Part number	Part name	Qty. per model/kit
DDN	K010	13-31		11051002	Retaining ring	1
	K020	13-31		5000702	Lip seal	1
	K021	13-31		5000702	Lip seal	1
	K030	13-31		11127995	Housing, 4-bolt, C flange	1
	K040	13-31		315325 (9005110-8700)	Plug assembly	1
	K060	13-31		1700721	End cap seal	1
	K070	13-31		315325 (9005110-8700)	Plug assembly	1
F2N	K010	12-20		016014 (9006200-0206)	Retaining ring	1
	K020	12-20		11114571	Lip seal (SB-2006-005)	1
	K030	12-20		11085740	Housing, 4-bolt, C flange	1
	K040	12-20		315325 (9005110-8700)	Plug assembly	1
	K060	12-20		1700721	End cap seal	1
	K070	12-20		315325 (9005110-8700)	Plug assembly	1
F8N	K010	12-20		016014 (9006200-0206)	Retaining ring	1
	K020	12-20		11114571	Lip seal (SB-2006-005)	1
	K030	12-20		11085741	Housing, 2-bolt, B flange	1
	K040	12-20		315325 (9005110-8700)	Plug assembly	1
	K060	12-20		1700721	End cap seal	1
	K070	12-20		315325 (9005110-8700)	Plug assembly	1

Shaft, auxiliary flange and end cap

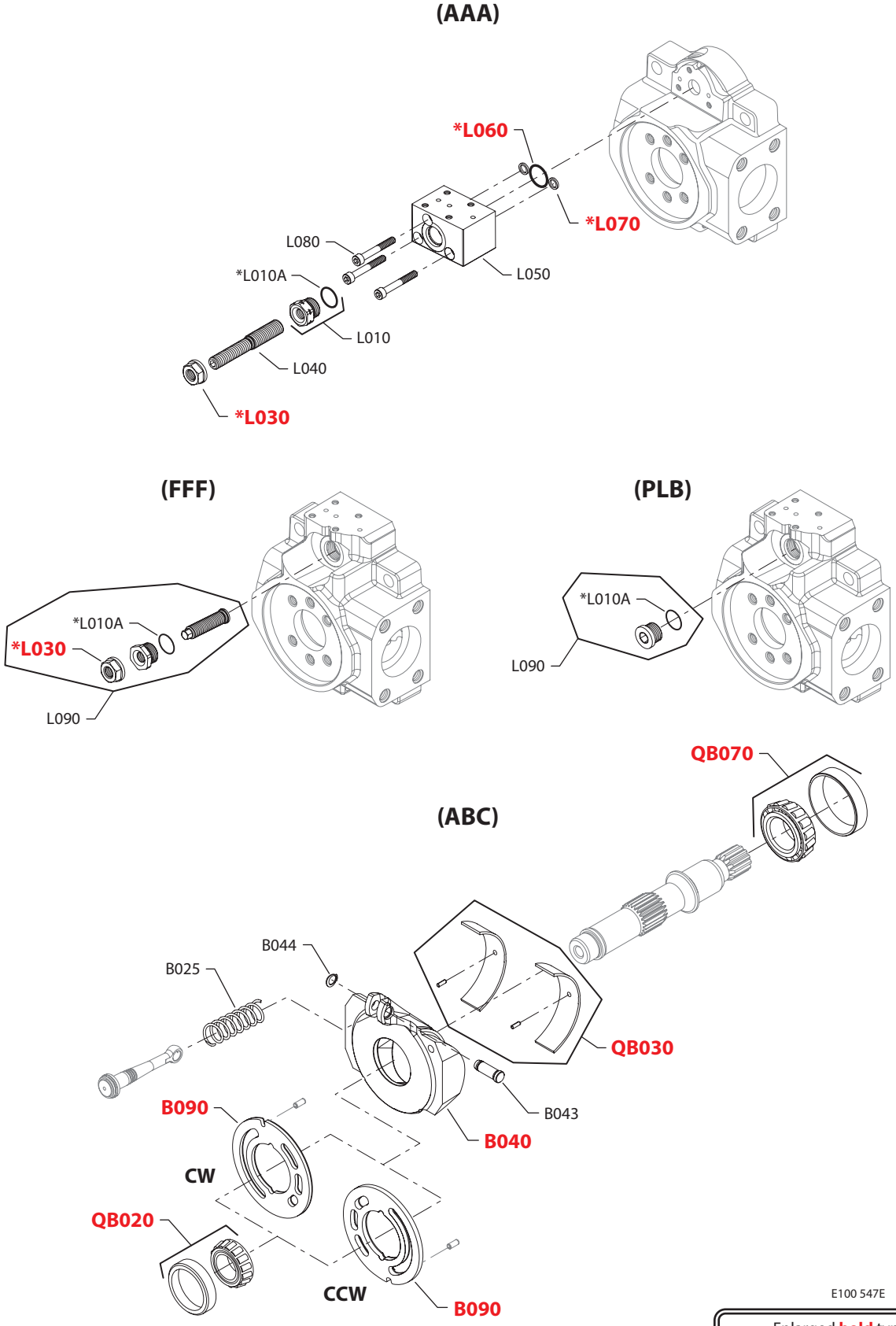

* = included in base motor seal kit Q210

E100 547E

Enlarged **bold** type item numbers are recommended part to stock for servicing.

Shaft, auxiliary flange and end cap

Displacement limiter

Order code	Item	Date begin	Date end	Part number	Part name	Qty. per model/kit
AAA	L010	06-17	08-17	1701250	Displacement limiter plug	1
	L010A	06-17	08-17	001131 (9004201-5000)	O-ring	1
	L030	06-17	08-17	076042 (9003509-0012)	Seal nut	1
	L040	06-17	08-17	obsolete	Adjustment screw	1
	L050	06-17	08-17	obsolete	Displacement limiter block	1
	L060	06-17	08-17	011288 (9004104-0190)	O-ring	1
	L070	06-17	08-17	4740154	Seal ring	2
	L080	06-17	08-17	505038	Screw	3
FFF	L090	07-35		11099076	Displacement limiter assembly	1
	L010A	07-35		001131 (9004201-5000)	O-ring	1
	L030	07-35		076042 (9003509-0012)	Seal nut	1
NNN				None		
PLB	L090	14-42		9005110-7500	Plug assembly	1
	L010A	14-42		9004201-5000	O-ring	1

Special hardware

ABC	B025	05-21	16-23	1700876	Bias spring	1
	B040	05-21	16-23	1701217	Swashplate, gen. 1	1
	B043	05-21	16-23	1701109	Pin, headed	1
	B044	05-21	16-23	5000691	Retaining ring	1
	B090	05-21	16-23	1701164	Valve plate, CW, JRR, gen. 1	1
	B090	05-21	16-23	1701216	Valve plate, CCW, JRL, gen. 1	1
	QB020	05-21	16-23	4510095	Rear bearing kit	1
	QB030	05-21	16-23	4510437	Swashplate bearing kit	1
	QB070	05-21	16-23	4510096	Front bearing kit	1

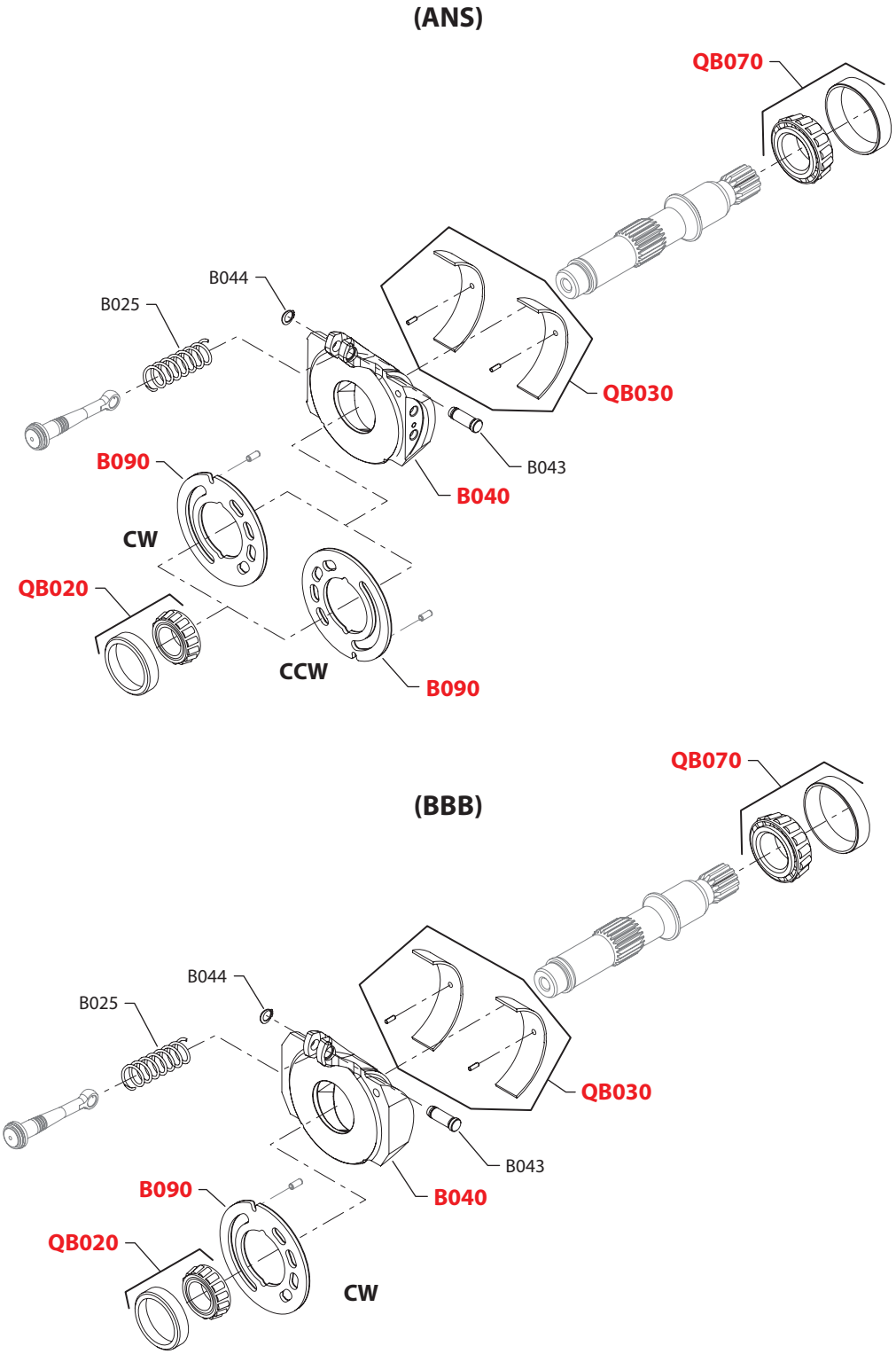

E103 240E

* = included in base motor seal kit Q210

Enlarged **bold** type item numbers are recommended part to stock for servicing.

Special hardware

Order code	Item	Date begin	Date end	Part number	Part name	Qty. per model/kit
ANS	B025	14-30		1700876	Bias spring	1
	B040	14-30		11134886	Swashplate, gen. 2	1
	B043	14-30		1701109	Pin, headed	1
	B044	14-30		5000691	Retaining ring	1
	B090	14-30		11025892	Valve plate, CW, JRR, gen. 2	1
	B090	14-30		11034339	Valve plate, CCW, JRL, gen. 2	1
	QB020	14-30		4510095	Rear bearing kit	1
	QB030	14-30		11022421	Swashplate bearing kit	1
	QB070	14-30		4510096	Front bearing kit	1
BBB	B025	14-30		1700876	Bias spring	1
	B040	14-30		11091209	Swashplate, gen. 2	1
	B043	14-30		1701109	Pin, headed	1
	B044	14-30		5000691	Retaining ring	1
	B090	14-30		11025892	Valve plate, CW, JRR, gen. 2	1
	QB020	14-30		4510095	Rear bearing kit	1
	QB030	14-30		11022421	Swashplate bearing kit	1
	QB070	14-30		4510096	Front bearing kit	1

(DDD & NNN)

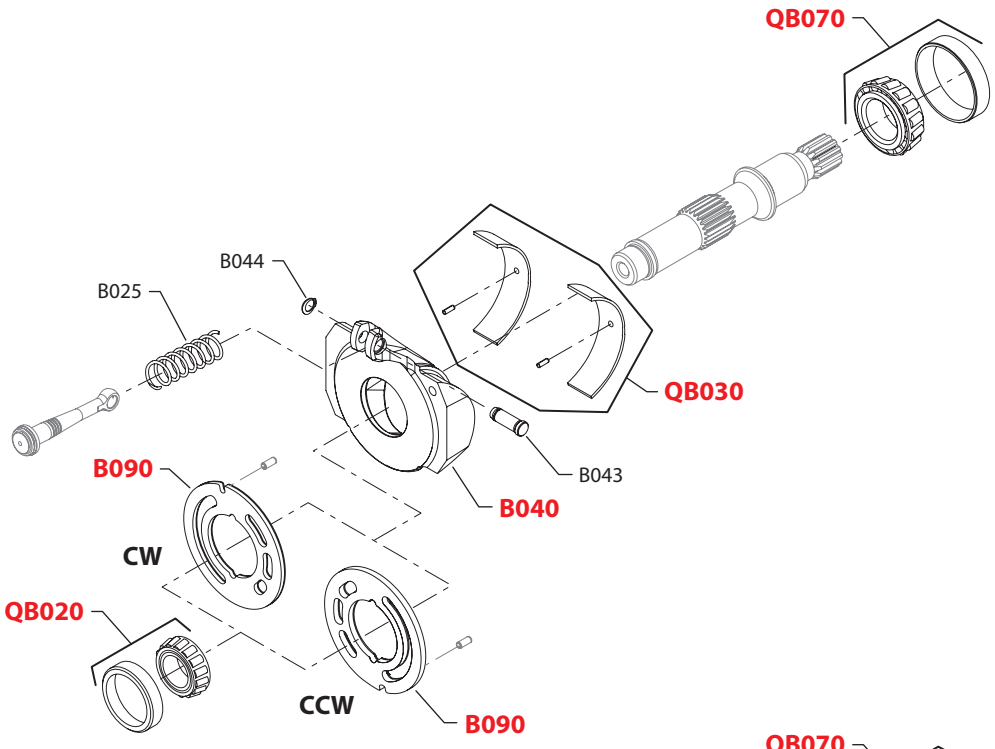

(JJJ & MMM)

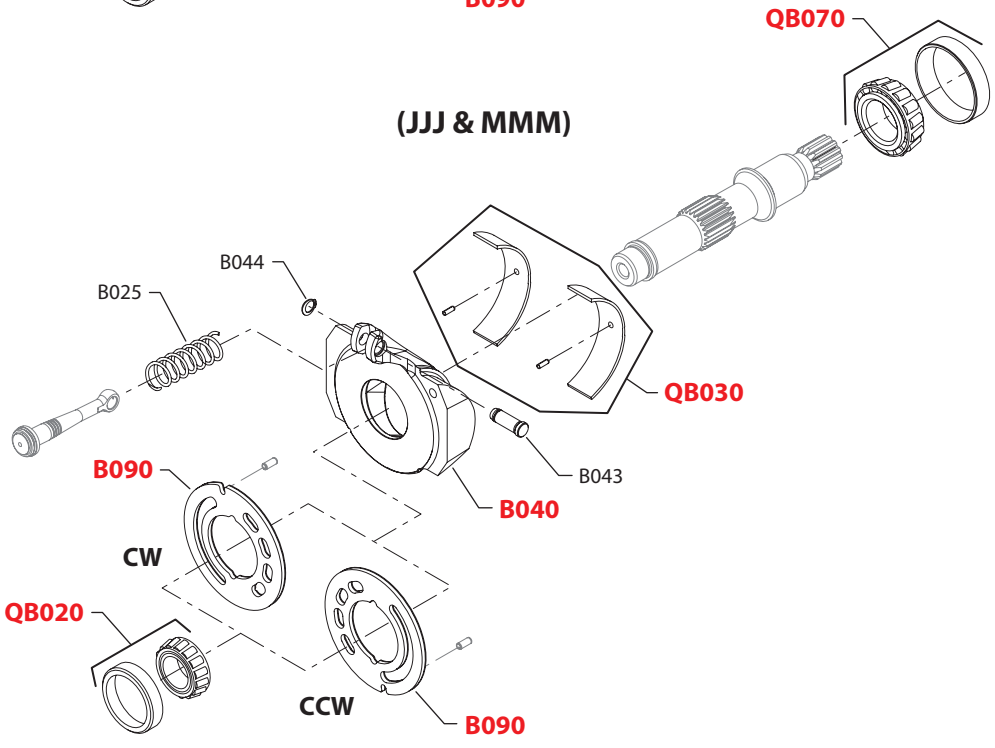

E103 241E

* = included in base motor seal kit Q210

Enlarged **bold** type item numbers are recommended part to stock for servicing.

Special hardware

Order code	Item	Date begin	Date end	Part number	Part name	Qty. per model/kit
DDD	B025	14-30	16-23	1700876	Bias spring	1
	B040	14-30	16-23	1701217	Swashplate, gen. 1	1
	B043	14-30	16-23	1701109	Pin, headed	1
	B044	14-30	16-23	5000691	Retaining ring	1
	B090	14-30	16-23	1700722	Valve plate, CW, JRR, gen. 1	1
	B090	14-30	16-23	1700863	Valve plate, CCW, JRL, gen. 1	1
	QB020	14-30	16-23	4510095	Rear bearing kit	1
	QB030	14-30	16-23	11045998	Swashplate bearing kit	1
	QB070	14-30	16-23	4510096	Front bearing kit	1
JJJ	B025	12-22		1700876	Bias spring	1
	B040	12-22		11091209	Swashplate, gen. 2	1
	B043	12-22		1701109	Pin, headed	1
	B044	12-22		5000691	Retaining ring	1
	B090	12-22		11025892	Valve plate, CW, JRR, gen. 2	1
	B090	12-22		11034339	Valve plate, CCW, JRL, gen. 2	1
	QB020	12-22		4510095	Rear bearing kit	1
	QB030	12-22		11022421	Swashplate bearing kit	1
	QB070	12-22		4510096	Front bearing kit	1
MMM	B025	07-37		1700876	Bias spring	1
	B040	07-37		11091209	Swashplate, gen. 2	1
	B043	07-37		1701109	Pin, headed	1
	B044	07-37		5000691	Retaining ring	1
	B090	07-37		11034339	Valve plate, CCW, JRL, gen. 2	1
	QB020	07-37		4510095	Rear bearing kit	1
	QB030	07-37		11022421	Swashplate bearing kit	1
	QB070	07-37		4510096	Front bearing kit	1
NNN	B025	03-23	16-23	1700876	Bias spring	1
	B040	03-23	16-23	1701217	Swashplate, gen. 1	1
	B043	03-23	16-23	1701109	Pin, headed	1
	B044	03-23	16-23	5000691	Retaining ring	1
	B090	03-23	16-23	1700722	Valve plate, CW, JRR, gen. 1	1
	B090	03-23	16-23	1700863	Valve plate, CCW, JRL, gen. 1	1
	QB020	03-23	16-23	4510095	Rear bearing kit	1
	QB030	03-23	16-23	4510437	Swashplate bearing kit	1
	QB070	03-23	16-23	4510096	Front bearing kit	1

(045B - 065C)

Design prior to 10-32

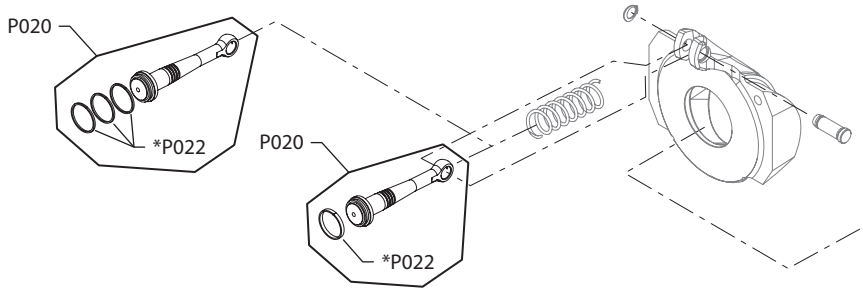

Design after 10-31

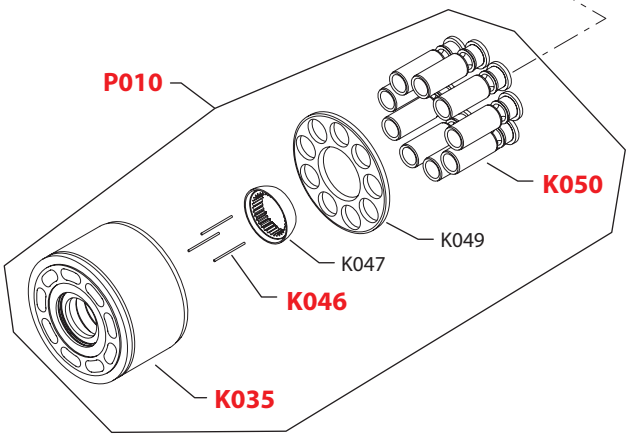

E100 611E

* = included in base motor seal kit Q210

Enlarged **bold** type item numbers are recommended part to stock for servicing.

Displacement

Order code	Item	Date begin	Date end	Part number	Part name	Qty. per model/kit
045B	K035	03-23		11089200	Cylinder block assembly, 45-60cc, gen. 1	1
	K046	03-23		4700091	Holddown pin	3
	K047	03-23		1700363	Slipper retainer guide	1
	K049	03-23		1700367	Slipper retainer	1
	K050	03-23		1700369	Piston assembly, gen. 1	9
	P010	03-23		1700508	Cylinder block kit, gen. 1	1
	P020	10-32		11078449	Servo piston assembly, gen. 1 (SB-2006-006 & SB-2010-033)	1
	P022	10-32		366955	Piston ring (SB-2006-006 & SB-2010-033)	1
	P022	03-23	10-31	1701453	Piston ring (SB-2006-006 & SB-2010-033)	3
051B	K035	03-23		11089200	Cylinder block assembly, 45-60cc, gen. 1	1
	K046	03-23		4700091	Holddown pin	3
	K047	03-23		1700363	Slipper retainer guide	1
	K049	03-23		1700367	Slipper retainer	1
	K050	03-23		1700369	Piston assembly, gen. 1	9
	P010	03-23		1700508	Cylinder block kit, gen. 1	1
	P020	03-23		11078451	Servo piston assembly, gen. 1 (SB-2006-006 & SB-2010-033)	1
	P022	10-32		366955	Piston ring (SB-2006-006 & SB-2010-033)	1
	P022	03-23	10-31	1701453	Piston ring (SB-2006-006 & SB-2010-033)	3
055B	K035	04-33		11089200	Cylinder block assembly, 45-60cc, gen. 1	1
	K046	04-33		4700091	Holddown pin	3
	K047	04-33		1700363	Slipper retainer guide	1
	K049	04-33		1700367	Slipper retainer	1
	K050	04-33		1700369	Piston assembly, gen. 1	9
	P010	04-33		1700508	Cylinder block kit, gen. 1	1
	P020	04-33		11078385	Servo piston assembly, gen. 1 (SB-2006-006 & SB-2010-033)	1
	P022	10-32		366955	Piston ring (SB-2006-006 & SB-2010-033)	1
	P022	04-33	10-31	1701453	Piston ring (SB-2006-006 & SB-2010-033)	3
060B	K035	03-23		11089200	Cylinder block assembly, 45-60cc, gen. 1	1
	K046	03-23		4700091	Holddown pin	3
	K047	03-23		1700363	Slipper retainer guide	1
	K049	03-23		1700367	Slipper retainer	1
	K050	03-23		1700369	Piston assembly, gen. 1	9
	P010	03-23		1700508	Cylinder block kit, gen. 1	1
	P020	03-30		11078455	Servo piston assembly, gen. 1 (SB-2006-006 & SB-2010-033)	1
	P022	10-32		366955	Piston ring (SB-2006-006 & SB-2010-033)	1
	P022	03-23	10-31	1701453	Piston ring (SB-2006-006 & SB-2010-033)	3
065C	K035	03-23		11089222	Cylinder block assembly, 65-75cc, gen. 1	1
	K046	03-23		4700091	Holddown pin	3
	K047	03-23		1700363	Slipper retainer guide	1
	K049	03-23		1700367	Slipper retainer	1
	K050	03-23		4570457	Piston assembly, gen. 1	9
	P010	03-23		1700652	Cylinder block kit, gen. 1	1
	P020	03-30		11078385	Servo piston assembly, gen. 1 (SB-2006-006 & SB-2010-033)	1
	P022	10-32		366955	Piston ring (SB-2006-006 & SB-2010-033)	1
	P022	03-23	10-31	1701453	Piston ring (SB-2006-006 & SB-2010-033)	3

Design prior to 10-32 **(071C - 075C)**

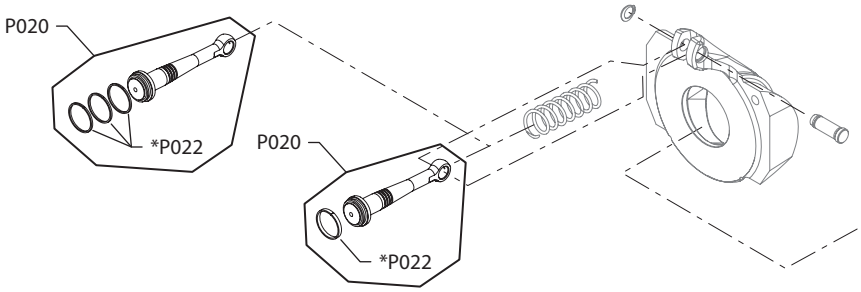

Design after 10-31

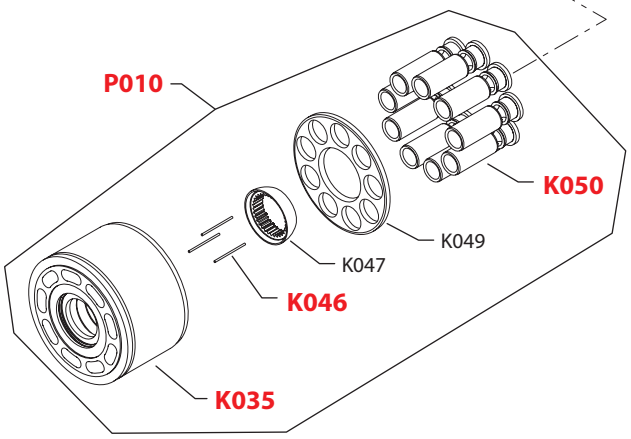

(M51B - S51B)

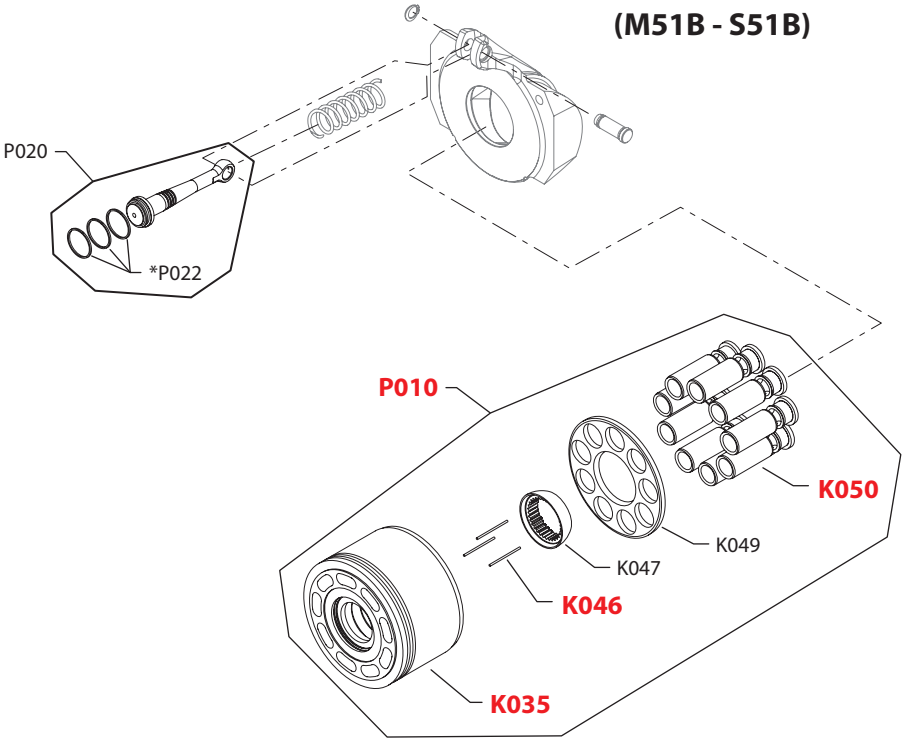

E103 242E

* = included in base motor seal kit Q210

Enlarged **bold** type item numbers are recommended part to stock for servicing.

Displacement

Order code	Item	Date begin	Date end	Part number	Part name	Qty. per model/kit
071C	K035	04-33		11089222	Cylinder block assembly, 65-75cc, gen. 1	1
	K046	04-33		4700091	Holddown pin	3
	K047	04-33		1700363	Slipper retainer guide	1
	K049	04-33		1700367	Slipper retainer	1
	K050	04-33		4570457	Piston assembly, gen. 1	9
	P010	04-33		1700652	Cylinder block kit, gen. 1	1
	P020	04-33		11078455	Servo piston assembly, gen 1 (SB-2006-006 & SB-2010-033)	1
	P022	10-32		366955	Piston ring (SB-2006-006 & SB-2010-033)	1
	P022	04-33	10-31	1701453	Piston ring (SB-2006-006 & SB-2010-033)	3
075C	K035	10-14		11089222	Cylinder block assembly, 65-75cc, gen. 1	1
	K046	10-14		4700091	Holddown pin	3
	K047	10-14		1700363	Slipper retainer guide	1
	K049	10-14		1700367	Slipper retainer	1
	K050	10-14		4570457	Piston assembly, gen. 1	9
	P010	10-14		1700652	Cylinder block kit, gen. 1	1
	P020	10-14		11078454	Servo piston assembly, gen 1 (SB-2006-006 & SB-2010-033)	1
	P022	10-32		366955	Piston ring (SB-2006-006 & SB-2010-033)	1
	P022	10-14	10-31	1701453	Piston ring (SB-2006-006 & SB-2010-033)	3
M51B	K035	09-20		11127373	Cylinder block assembly, 45-60cc, undercut, gen 2	1
	K046	09-20		4700091	Holddown pin	3
	K047	09-20		1700363	Slipper retainer guide	1
	K049	09-20		1700367	Slipper retainer	1
	K050	09-20		11065783	Piston assembly, gen 2 (SB-2012-024)	9
	P010	09-20		11065787	Cylinder block kit, gen 2 (SB-2012-024)	1
	P020	09-20		11028319	Servo piston assembly, gen 2	1
	P022	09-20		4740376	Piston ring	3
S45B	K035	09-20		11127373	Cylinder block assembly, 45-60cc, undercut	1
	K046	09-20		4700091	Holddown pin	3
	K047	09-20		1700363	Slipper retainer guide	1
	K049	09-20		1700367	Slipper retainer	1
	K050	09-20		11065783	Piston assembly, gen 2 (SB-2012-024)	9
	P010	09-20		11065787	Cylinder block kit, gen 2 (SB-2012-024)	1
	P020	09-20		11028321	Servo piston assembly, gen 2	1
	P022	09-20		4740376	Piston ring	3
S51B	K035	09-20		11127373	Cylinder block assembly, 45-60cc, undercut	1
	K046	09-20		4700091	Holddown pin	3
	K047	09-20		1700363	Slipper retainer guide	1
	K049	09-20		1700367	Slipper retainer	1
	K050	09-20		11065783	Piston assembly, gen 2 (SB-2012-024)	9
	P010	09-20		11065787	Cylinder block kit, gen 2 (SB-2012-024)	1
	P020	09-20		11028319	Servo piston assembly, gen 2	1
	P022	09-20		4740376	Piston ring	3

(S55B - S75C)

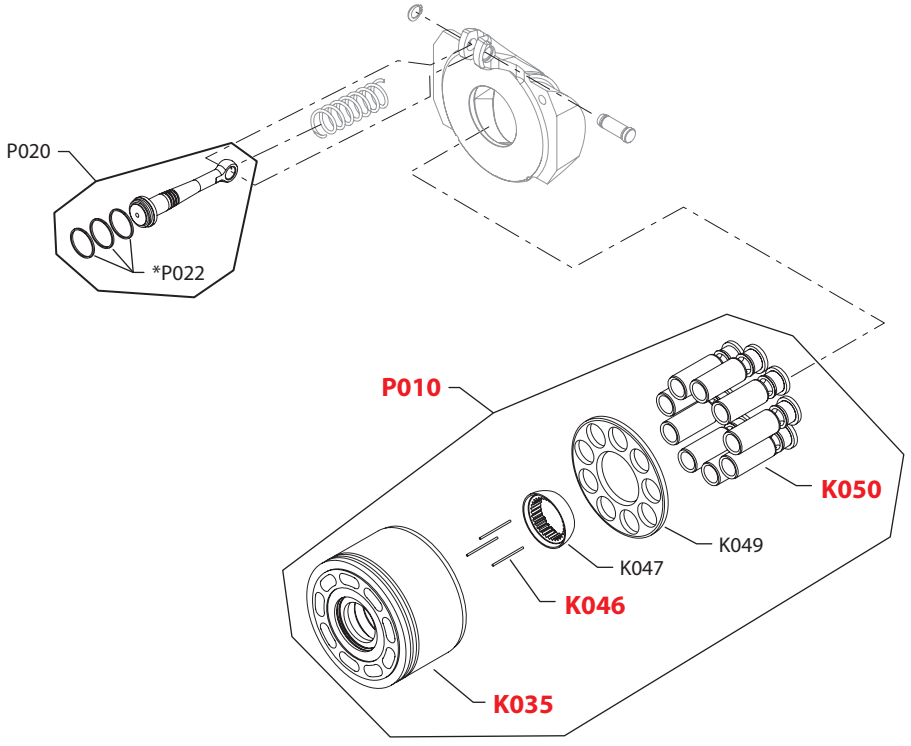

E101 651E

* = included in base motor seal kit Q210

Enlarged **bold** type item numbers are recommended part to stock for servicing.

Displacement

Order code	Item	Date begin	Date end	Part number	Part name	Qty. per model/kit
S55B	K035	11-50		11127373	Cylinder block assembly, 45-60cc, undercut, gen 2	1
	K046	11-50		4700091	Holddown pin	3
	K047	11-50		1700363	Slipper retainer guide	1
	K049	11-50		1700367	Slipper retainer	1
	K050	11-50		11065783	Piston assembly, gen 2 (SB-2012-024)	9
	P010	11-50		11065787	Cylinder block kit, gen 2 (SB-2012-024)	1
	P020	11-50		11028315	Servo piston assembly, gen 2	1
	P022	11-50		4740376	Piston ring	3
S60B	K035	11-50		11127373	Cylinder block assembly, 45-60cc, undercut, gen 2	1
	K046	11-50		4700091	Holddown pin	3
	K047	11-50		1700363	Slipper retainer guide	1
	K049	11-50		1700367	Slipper retainer	1
	K050	11-50		11065783	Piston assembly, gen 2 (SB-2012-024)	9
	P010	11-50		11065787	Cylinder block kit, gen 2 (SB-2012-024)	1
	P020	11-50		11028317	Servo piston assembly, gen 2	1
	P022	11-50		4740376	Piston ring	3
S65C	K035	11-50		11089222	Cylinder block assembly, 65-75cc, gen 2	1
	K046	11-50		4700091	Holddown pin	3
	K047	11-50		1700363	Slipper retainer guide	1
	K049	11-50		1700367	Slipper retainer	1
	K050	11-50		4570457	Piston assembly, gen 2	9
	P010	11-50		1700652	Cylinder block kit, gen 2	1
	P020	11-50		11028315	Servo piston assembly, gen 2	1
	P022	11-50		4740376	Piston ring	3
S71C	K035	11-50		11089222	Cylinder block assembly, 65-75cc, gen 2	1
	K046	11-50		4700091	Holddown pin	3
	K047	11-50		1700363	Slipper retainer guide	1
	K049	11-50		1700367	Slipper retainer	1
	K050	11-50		4570457	Piston assembly, gen 2	9
	P010	11-50		1700652	Cylinder block kit, gen 2	1
	P020	11-50		11028317	Servo piston assembly, gen 2	1
	P022	11-50		4740376	Piston ring	3
S75C	K035	10-14		11089222	Cylinder block assembly, 65-75cc, gen 2	1
	K046	10-14		4700091	Holddown pin	3
	K047	10-14		1700363	Slipper retainer guide	1
	K049	10-14		1700367	Slipper retainer	1
	K050	10-14		4570457	Piston assembly, gen 2	9
	P010	10-14		1700652	Cylinder block kit, gen 2	1
	P020	10-14		11015812	Servo piston assembly, gen 2	1
	P022	10-14		4740376	Piston ring	3

Overhaul seal kit

Order code	Item	Date begin	Date end	Part number	Part name	Qty. per model/kit
	Q210			11103473	Overhaul seal kit (SB-2011-031)	1
	C118	03-23		11062214	Adjusting plug assembly	1
	C138A	03-23		5000656	O-ring, .674 x .103, viton, 75D	1
	C200	03-23		4740154	Seal ring	4
	J090	03-23		5000099 (9004100-1550)	O-ring, 3.987 x .103, nitrile, 70D	1
	J095	03-23		545434 (9004100-0420)	O-ring, 3.239 x .070, nitrile, 70D	1
	J095	03-23		545434 (9004104-0310)	O-ring, 1.739 x 070, viton, 75D	1
	K020	03-23		5000702	Lip seal	1
	K021	03-23		5000702	Lip seal	1
	K060	03-23		1700721	End cap seal	1
	L010A	03-23		001131 (9004201-5000)	O-ring, .644 x .087, nitrile, 90D	1
	L030	03-23		076042 (9003509-0012)	Seal nut, M12	1
	L060	03-23		011288 (9004104-0190)	O-ring, .801 x .070, viton, 75D	1
	L070	03-23		4740154	Seal ring	2
	P022	10-32		366955	Piston ring, 22.4 free O.D. x 2.5 thick	1
	P022	03-23	10-31	1701453	Piston ring, 22.8 free O.D. x .46 thick (SB-2010-033)	3
	P022	06-51		4740376	Piston ring, 28.3 free O.D. x .53 thick	3

Service Bulletin: SB-2002-031

Products affected

Series 45 frame E, g, J, K and L open circuit pumps

Subject

Load sense spool spring guide seat change

Description

As a product improvement, Sauer-Danfoss is changing the load sense spool spring guide used in the two spool controls.

The spring guide changes from a conical interface with the spool to a spherical interface.

The new spring seat is interchangeable with the old one. The old spring guide is obsolete and no longer available as a service part.

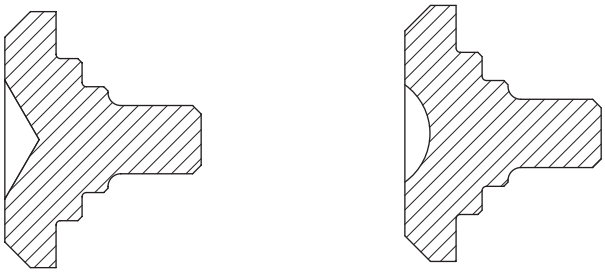

Old style New style

Models affected

Series 45 frame E, g, J, K and L open circuit pumps using the two spool style control.

Serial numbers

This change became effective at serial number A-02-38-xxxxx.

Part numbers affected

Description	Old part number	New part number
Spring guide	4740156	4740246

Parts disposition

■ Interchangeable

Service Bulletin: SB-2006-005

Products affected

Series 45 frame H and J open circuit pumps

Subject

Input shaft seal change

Description

Sauer-Danfoss has made a product improvement to the shaft lip seal. The new shaft lip seal has better sealing capabilities and is easier to assemble into the pump housing.

The new seal is interchangeable with the old seal. The old seal is obsolete and no longer available as a service part.

Models affected

All Series 45 frame H and J open circuit pumps.

Serial numbers

This change became effective at serial number A-06-15-xxxxx.

Part numbers affected

Description	Old part number	New part number
Shaft lip seal	5000190	5000702

Parts disposition

■ Interchangeable

Service Bulletin: SB-2006-006

Products affected

Series 45 frame J open circuit pumps

Subject

Servo piston ring change

Description

Sauer-Danfoss has made a change to the servo piston rings used in the Series 45 frame J open circuit pumps. Lab testing has shown that the current servo piston rings are hardened steel with sharp corners, which could cause wear in the servo piston bore of the end cap, creating a rough surface. This rough surface could lead to servo piston ring failures.

The new servo piston rings are made of mild steel wire which is flattened to give the servo piston rings a rounded edge.

The new servo piston rings are interchangeable with the old servo piston rings. The servo piston assemblies were also given new part numbers. The old servo piston rings and assemblies are obsolete and no longer available for service.

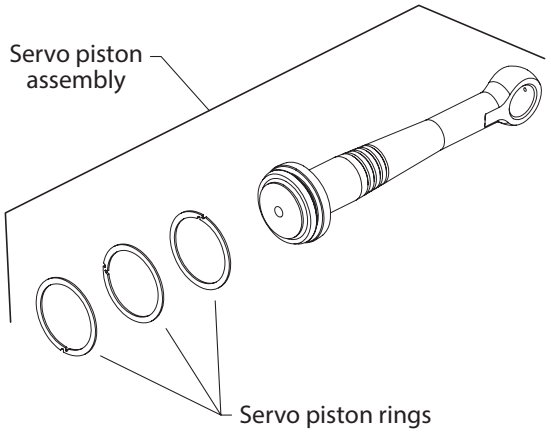

Models affected

All Series 45 frame J open circuit pumps.

Serial numbers

This change became effective in Slovakia at serial number DC-06-10-xxxxx.
This change became effective in the U.S.A. at serial number A-06-14-xxxxx.

Part numbers affected

Description	Old part number	New part number
Servo piston assembly 45cc	1701111	1701459
Servo piston assembly 51cc	1701113	1701460
Servo piston assembly 60cc	1701115	1701462
Servo piston assembly 65cc	1701117	1701461
Servo piston assembly 75cc	1701119	1701463
Servo piston ring	500234	1701453

Parts disposition

■ Interchangeable

Service Bulletin: SB-2007-047

Products affected

Series 45 frame E, F, g, and J open circuit pumps

Subject

Load sense plug change

Description

As a product improvement, Sauer-Danfoss has changed the LS adjustment plug. The new LS plug assembly has better sealing capabilities than both styles of old plug assemblies. The new plug assembly is interchangeable with both styles of old plugs. It is recommended that the old plugs be replaced with the new plug at first service. The old plugs are no longer available for service.

The overhaul seal kit part numbers have also changed. They will now include the new LS plug assembly instead of the individual seals for the LS plug. The old seal kits are obsolete and no longer available for service.

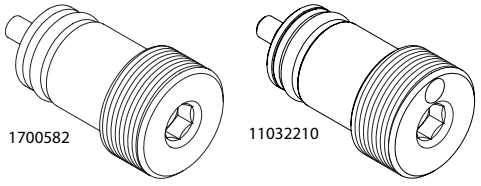

Old Design

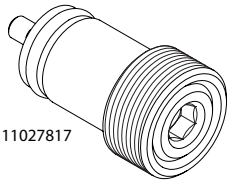

New Design

Models affected

All series 45 frame E, F, g, and J frame pumps with LS..

Serial numbers

This change became effective at serial number A-07-39-23181.

Part numbers affected

Description	Old part number	New part number
LS adjustment Plug	1700582 & 11032210	11027817
Overhaul seal kit, S45 E	4510433	11034352
Overhaul seal kit, S45 F	4510455	11034341
Overhaul seal kit, S45 G	4510289	11034340
Overhaul seal kit, S45 J	4510438	11032927
Control kit, high press. LS	11032452	4510416
Control kit, elec. on/off	11032453	4510462

Parts disposition

■ Interchangeable

Service Bulletin: SB-2008-052

Products affected

Series 45 frame G, H and J open circuit pumps

Subject

C pad auxiliary mounting flange

Description

As a product improvement, Sauer-Danfoss has changed the "C" auxiliary mounting flange to add clearance for adjusting the displacement limiter when used.

The new auxiliary mounting flange is interchangeable with the old auxiliary mounting flange.

The old "C" auxiliary mounting flange is obsolete and no longer available for service.

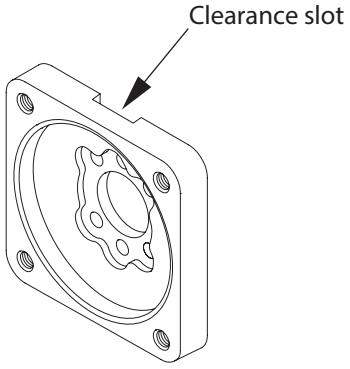

Models affected

Series 45, open circuit pumps with "C" auxiliary mounting flange.

Serial numbers

This change became effective at serial number A-08-39-XXXXX.

Part numbers affected

Description	Old part number	New part number
Auxiliary mounting flange	4570211	11039356

Parts disposition

■ Interchangeable

Service Bulletin: SB-2010-002

Products affected

Series 45 frame J open circuit pumps

Subject

Change in servo bore vent notch

Description

As a product improvement, Sauer-Danfoss is changing the servo bore near the vent notch in the end cap. The change will increase pump life by decreasing wear in the servo bore near the vent notch. The change consists of going from one to four vent notches. The four vent notches will have a more subtle transition when venting opposed to the current abrupt transition.

The new end caps are interchangeable with the old end caps. The old end caps will be obsolete.

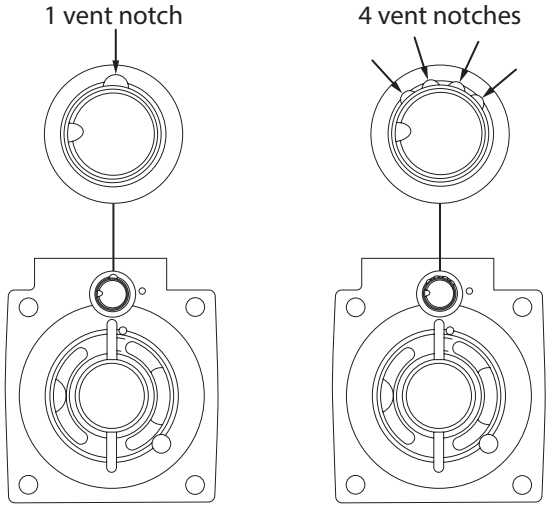

Models affected

All Series 45 frame J open circuit pumps.

Serial numbers

See table for implementation dates.

Service Bulletin: SB-2010-002

Part numbers affected

Description	Old part number	New part number	Implementation date
		Standard Servo Bore	
CW axial	11016777	11077589	A-10-28-XXXXX (09-Jul-2010)
CW axial	11016779	11077590	A-10-51-XXXXX (21-Dec-2010)
CW axial	11016780	11077591	A-10-51-XXXXX (23-Dec-2010)
CW radial	11016768	11068228	A-10-18-XXXXX (30-Apr-2010)
CW radial	11016769	11077600	A-10-19-XXXXX (07-May-2010)
CW radial	11016770	11077601	A-10-20-XXXXX (30-Apr-2010)
CW radial	11016771	11077602	A-10-21-XXXXX (25-May-2010)
CW radial	11016774	11077603	A-10-17-XXXXX (26-Apr-2010)
CW radial	11016775	11077604	A-10-29-XXXXX (15-Jul-2010)
CW radial	11037577	11077610	S-10-16-XXXXX (16-Apr-2010)
CW radial	11037977	11077611	S-10-34-XXXXX (19-Aug-2010)
CW radial	11038355	11077612	S-10-17-XXXXX (28-Apr-2010)
CW radial	1701150	11077592	A-10-11-XXXXX (03-Mar-2010)
CCW axial	11016786	11077593	A-10-43-XXXXX (22-Oct-2010)
CCW axial	11016787	11077594	A-10-50-XXXXX (14-Dec-2010)
CCW axial	11016788	11077595	A-10-50-XXXXX (14-Dec-2010)
CCW axial	11065057	11077596	A-10-17-XXXXX (23-Apr-2010)
CCW axial	11033027	N/A	N/A
CCW radial	11016781	11077605	A-10-42-XXXXX (18-Oct-2010)
CCW radial	11016782	11077606	A-11-02-XXXXX (07-Jan-2011)
CCW radial	11016783	11077607	A-10-51-XXXXX (20-Dec-2010)
CCW radial	11016784	11077608	A-10-51-XXXXX (23-Dec-2010)
CCW radial	11016785	11077609	A-11-01-XXXXX (05-Jan-2011)
CCW radial	11043922	11077613	S-10-11-XXXXX (15-Mar-2010)
		Large Servo Bore	
CW axial	11016778	11086967	A-10-49-XXXXX (29-Nov-2010)
CW radial	11016772	11085474	A-10-31-XXXXX (30-Jul-2010)
CW radial	11016773	11085473	A-10-35-XXXXX (27-Aug-2010)
CW radial	11016776	11086541	A-10-35-XXXXX (27-Aug-2010)
CW radial	11051386	11086678	A-10-31-XXXXX (30-Jul-2010)
CCW radial	11033794	11086934	A-11-05-XXXXX (28-Jan-2011)
CCW radial	11033812	11086919	A-10-37-XXXXX (10-Sep-2010)
CCW radial	N/A	11082641	A-10-34-XXXXX (22-Apr-2010)

Parts disposition

■ Interchangeable

Service Bulletin: SB-2010-026

Products affected

Series 45 open circuit pumps

Subject

Pressure compensator and load sense adjusting plug

Description

The supplier has changed for the pressure compensator and load sense adjusting plugs used in all series 45, frame E, F, g, J, K, and L open circuit controls. The new adjusting plugs are interchangeable with the old adjusting plugs. The part numbers have changed for tracking purposes.

The old adjusting plugs are obsolete and no longer available for service.

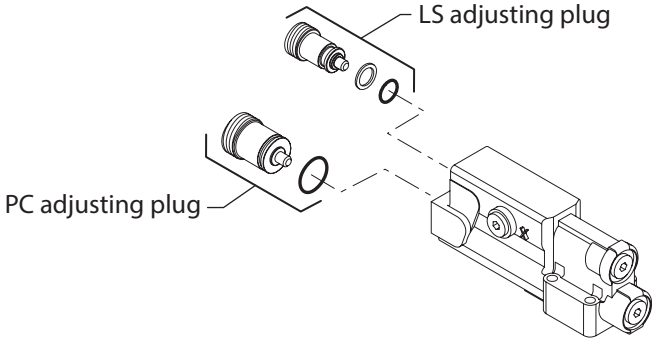

Models affected

All series 45 open circuit pump controls.

Serial numbers

This change became effective at serial number A-11-08-XXXXX. (22-Feb-2011)

Part numbers affected

Description	Old part number	New part number
LS adjustment plug assembly	11027817	11062214
PC adjustment plug assembly	1700581	11062379

Parts disposition

■ Interchangeable

Service Bulletin: SB-2010-033

Products affected

Series 45 frame J open circuit pumps

Subject

Servo piston assembly change

Description

As a product improvement, Sauer-Danfoss is changing the servo piston assembly. The servo piston assembly is going from three servo piston rings to one piston ring and the width of the servo piston ring groove is wider to accept the new servo piston ring.

The new servo piston assemblies are completely interchangeable with the old servo piston assemblies.

The old servo piston assemblies are obsolete and no longer available for service.

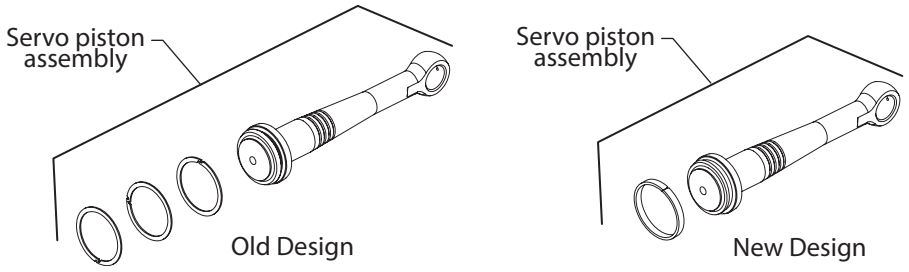

Models affected

All series 45 frame J open circuit pumps.

Serial numbers

See table below for effectivity dates.

Part numbers affected

Description	Old part number	New part number	Effectivity date
Servo piston assy 45cc	1701459	11078449	A-10-32-XXXXX
Servo piston assy 51cc	1701460	11078451	A-10-41-XXXXX
Servo piston assy 55cc	1701461	11078385	A-10-31-XXXXX
Servo piston assy 60cc	1701462	11078455	A-10-31-XXXXX
Servo piston assy 65cc	1701461	11078385	A-10-31-XXXXX
Servo piston assy 71cc	1701462	11078455	A-10-31-XXXXX
Servo piston assy 75cc	1701463	11078454	A-10-30-XXXXX

Parts disposition

■ Interchangeable

Service Bulletin: SB-2011-031

Products affected

Series 45 frame J open circuit pumps

Subject

Component changes to the overhaul seal kit

Description

Sauer-Danfoss is making a change to the overhaul seal kit for the Series 45 frame J open circuit pumps. This change is removing the standard plug O-rings and adding the new style servo piston seal ring.

The new seal kit can be used on older pumps but the old seal kit cannot be used on newer pumps.

The part number has changed for tracking purposes. The old seal kit is obsolete and no longer available for service.

Models affected

Series 45 frame J open circuit pumps.

Serial numbers

This change became effective at serial number A-12-04-XXXXX. (20-Jan-2012)

Part numbers affected

Description	Old part number	New part number
Overhaul seal kit	11032927	11103473

Parts disposition

■ Interchangeable

Service Bulletin: SB-2012-011

Products affected

Series 45 E, F, G, and J frame open circuit pumps

Subject

Servo control (choke) orifice design improvement

Description

Sauer-Danfoss is implementing a change to the servo control (choke) orifice design for the Series 45 E, F, g, and J frame pumps.

The current servo control (choke) orifice design dampens all servo activity, increasing high pressure overshoots and response time to de-stroke the pump. This is done with an orifice in the servo piston port in the control housing.

The new servo control (choke) orifice design does not dampen PC response, reducing the high pressure overshoots, and dampens all other servo activity. This is done with an orifice and a locking plug located between the pressure compensator spool and the load sense spool. The locking plug has been added to ensure that the orifice is held securely in place.

Installing the orifice in its new location requires the removal of the control from the pump and the pressure compensator spool via spool plug hole, opposite of the spring adjustment plug hole. The torque to tighten the orifice is 18-30 in-lbs. and the orifice plug torque is 18-30 in-lbs. Re-install the pressure compensator spool correctly.

This change affects the PC/LS, Remote PC/LS, Electric PC/LS, and Electric proportional PC/LS controls.

This change does not include the PC only and LS only controls.

There will be new control kit part numbers assigned to replace the old control kit part numbers.

The new control kits for the electric proportional controls will have a 0.8mm orifice and orifice plug installed in the control assembly, and a 1.0mm orifice included in the package.

The old control kits will be obsolete and no longer available for service.

The servo control (choke) orifice can be found in the G module of the order code.

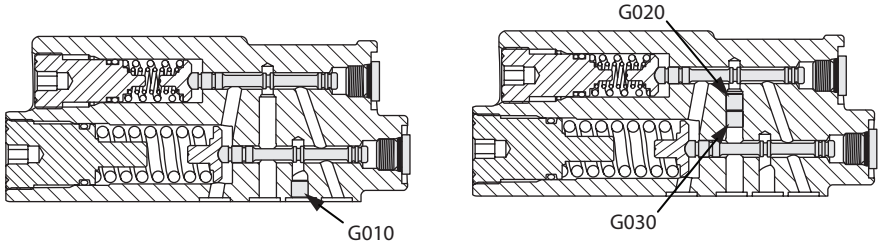

Models affected

Series 45, E, F, G and J frame open circuit pumps as described.

Serial numbers

This change became effective at serial number A-12-40-XXXXX. (01-Oct-2012)

Service Bulletin: SB-2012-011

Part numbers affected

Code	Description	Old p/n	New p/n
AB	Low pressure LB	4510413	11112206
AF	Electric ON/OFF solenoid, 12VDC, NO	11020464	11112296
AG	Electric ON/OFF solenoid, 12VDC, NC	4510462	11112295
AH	Electric proportional solenoid, 12VDC, NC	11022601	11112221
AK	Electric proportional solenoid,24VDC, NC	11050837	11112291
AL	Electric proportional solenoid,12VDC, NC	11048818	11112218
AN	Electric ON/OFF solenoid, NO, 12VDC	11022612	11112229
AP	Remote PC, Low pressure	4510417	11112209
AR	Electric ON/OFF solenoid, NC, 12VDC	4510490	11112220
AS	Low pressure LS	4510414	11112210
AT	Electric ON/OFF solenoid, NO, 24VDC	11059898	11112292
AV	Electric proportional solenoid,12VDC, NC	11022613	11112301
AW	Electric proportional solenoid,12VDC,NO	11106466	11112294
AX	Electric proportional solenoid,12VDC,NO	11106462	11112230
AY	Electric ON/OFF solenoid NC, 24VDC	11047274	11112303
BB	High pressure LB	4510415	11112211
BE	Electric ON/OFF solenoid, NC, 12VDC	11082406	11112299
BF	Electric ON/OFF solenoid, NO, 12VDC	11082407	11112300
BG	Electric ON/OFF solenoid, 24VDC, NC	11043397	11112289
BH	Electric proportional solenoid,12VDC, NC	11106967	11112216
BK	Electric proportional solenoid,24VDC,NC	11082408	11112302
BL	Electric proportional solenoid, 24VDC, NC	11082409	11112224
BM	Electric proportional solenoid,12VDC, NC	11106966	11112298
BN	Electric ON/OFF solenoid,12VDC, NO	11082410	11112222
BP	Remote PC, high pressure	4510418	11112212
BR	Electric ON/OFF solenoid,12VDC, NC	11082411	11112219
BS	High pressure LS	4510416	11112207
BW	Electric proportional solenoid,12VDC, NO	11106968	11112293
BX	Electric proportional solenoid,12VDC, NO	11106965	11112214
CK	Electric proportional solenoid, 24VDC, NO	11106463	11112305
CL	Electric proportional solenoid, 24VDC, NO	11106464	11112231
CN	Electric ON/OFF solenoid, 24VDC, NO	11106964	11112226
CR	Electric ON/OFF solenoid, 24VDC, NC	11066415	11112217
DF	Electric ON/OFF solenoid, 24VDC, NO	11082432	11112304
DK	Electric proportional solenoid, 24VDC, NO	11106969	11112290
DL	Electric proportional solenoid,24VDC, NO	11106970	11112225
DN	Electric ON/OFF solenoid, 24VDC, NO	11082433	11112227
DR	Electric ON/OFF solenoid, 24VDC, NC	11082434	11112228
FA	Electric dump valve, solenoid, 12VDC, NC	11082435	11112297
FB	Electric dump valve, solenoid, 12VDC, NC	11082436	11112223
LB	LB control	4510388	11112205
LS	LS control	4510412	11112208
RP	Remote PC	4510419	11112213

Parts disposition

- Interchangeable
- Use parts in stock

Service Bulletin: SB-2012-024

Products affected

Series 45 second generation 45-60cc J frame open circuit pumps

Subject

Rotating group change

Description

As a product improvement, Sauer-Danfoss has changed the design of the cylinder block and piston/slipper assemblies used in the second generation 45cc through 60cc J frame open circuit pumps. The new cylinder block has undercut piston bores and will have two grooves around the bottom for identification compared to one groove on the previous block.

The new piston/ slipper assemblies have a slightly smaller outside diameter and an increased wall thickness. The new piston wall thickness is approximately 0.116" [2.9mm]. The old style piston wall thickness is approximately 0.093" [2.4mm].

The new cylinder block kit can be used to replace the old cylinder block kit (non-undercut) in second generation 45cc through 60cc J frame pumps.

The old cylinder block kit (non-undercut) should not be used to replace the new cylinder block kit in second generation 45cc through 60cc J frame pumps.

Individual parts from the old and new rotating groups cannot be intermixed. Mixing parts may result in a premature pump failure.

To identify a second generation J frame pump, as an example the order code will start with JRLSXXB. The "S" is an indicator for second generation J frame pumps.

Other differences found in the second generation J frame pumps are: valve plate (timing), swashplate bearings (bearing material), swashplate (pressure balanced), servo piston (larger diameter and 3 servo rings), and end cap (4 vent notches and larger servo bore diameter).

The old cylinder block kit will not be obsolete as it is used in production of the first generation J frame pumps with the smaller servo piston diameter.

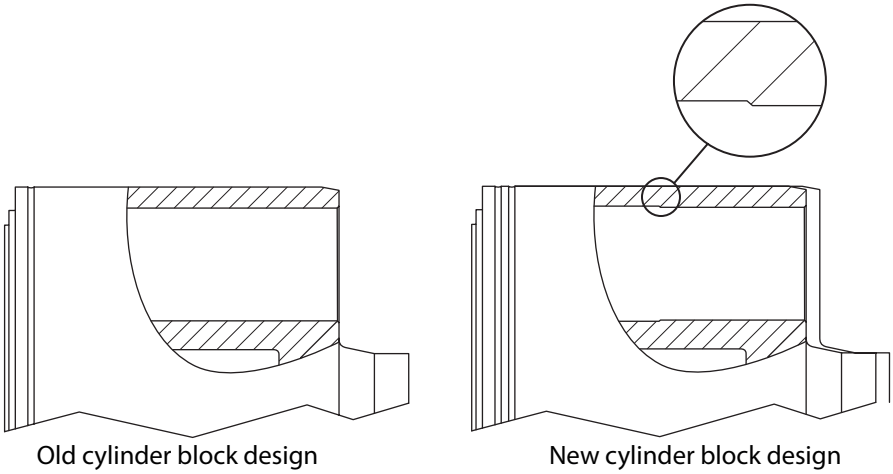

Old cylinder block design

New cylinder block design

Old piston design

New piston design

Service Bulletin: SB-2012-024

Models affected

All Series 45 second generation 45cc through 60cc J frame open circuit pumps

Serial numbers

This change became effective at serial number A-12-40-XXXXX (01-Oct-2012)

Part numbers affected

Description	Old part number	New part number
Cylinder block	1700388	11065782
Piston/slipper assembly	1700369	11065783
Cylinder block kit	1700508	11065787

Parts disposition

- Interchangeable only when replacing the old cylinder block kit with a new cylinder block kit.
- Revise existing part orders

Service Bulletin: SB-2016-007

Products affected

Series 45 frame E, F and J frame open circuit pumps

Subject

Solenoid valve adapter design change

Description

A design change has been made to the control solenoid valve adapter on Series 45 E, F and J frame open circuit pumps. The change is the addition of threads in the load sense port of the adapter for future control options. The thread size is M5x0.8-6H.

The new solenoid valve adapter can be used to replace the old solenoid valve adapter but the old solenoid valve adapter cannot be used to replace the new solenoid valve adapter.

The new solenoid valve adapter has a drill point below the O-ring boss port as an identification mark designating it as the new design.

The old solenoid valve adapter is obsolete and no longer available as a service part.

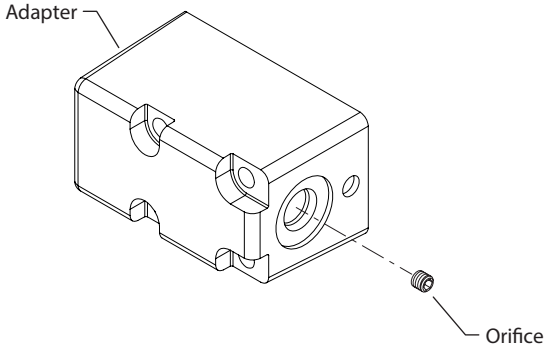

Models affected

All Series 45 E, F, and J frame open circuit pumps using a control with a solenoid valve and adapter.

Serial numbers affected

This change became effective at serial number A- 15-10-XXXXX. (09-Mar-2015)

Part numbers affected

Description	Old part number	New part number
Solenoid valve adapter	1701029	11150082

Parts disposition

■ Interchangeable - - only when replacing an old solenoid valve adapter with a new solenoid valve.

Products we offer:

- Bent Axis Motors
- Closed Circuit Axial Piston Pumps and Motors
- Displays
- Electrohydraulic Power Steering
- Electrohydraulics
- Hydraulic Power Steering
- Integrated Systems
- Joysticks and Control Handles
- Microcontrollers and Software
- Open Circuit Axial Piston Pumps
- Orbital Motors
- PLUS+1® GUIDE
- Proportional Valves
- Sensors
- Steering
- Transit Mixer Drives

Danfoss Power Solutions is a global manufacturer and supplier of high-quality hydraulic and electronic components. We specialize in providing state-of-the-art technology and solutions that excel in the harsh operating conditions of the mobile off-highway market. Building on our extensive applications expertise, we work closely with our customers to ensure exceptional performance for a broad range of off-highway vehicles.

We help OEMs around the world speed up system development, reduce costs and bring vehicles to market faster.
Danfoss – Your Strongest Partner in Mobile Hydraulics.

Go to www.powersolutions.danfoss.com for further product information.

Wherever off-highway vehicles are at work, so is Danfoss.

We offer expert worldwide support for our customers, ensuring the best possible solutions for outstanding performance. And with an extensive network of Global Service Partners, we also provide comprehensive global service for all of our components.

Please contact the Danfoss Power Solution representative nearest you.

Comatrol
www.comatrol.com

Schwarzmüller-Inverter
www.schwarzmueller-inverter.com

Turolla
www.turollaocg.com

Valmova
www.valmova.com

Hydro-Gear
www.hydro-gear.com

Daikin-Sauer-Danfoss
www.daikin-sauer-danfoss.com

Local address:

Danfoss
Power Solutions US Company
2800 East 13th Street
Ames, IA 50010, USA
Phone: +1 515 239 6000

Danfoss
Power Solutions GmbH & Co. OHG
Krokamp 35
D-24539 Neumünster, Germany
Phone: +49 4321 871 0

Danfoss
Power Solutions ApS
Nordborgvej 81
DK-6430 Nordborg, Denmark
Phone: +45 7488 2222

Danfoss
Power Solutions
22F, Block C, Yishan Rd
Shanghai 200233, China
Phone: +86 21 3418 5200

Danfoss can accept no responsibility for possible errors in catalogues, brochures and other printed material. Danfoss reserves the right to alter its products without notice. This also applies to products already on order provided that such alterations can be made without subsequential changes being necessary in specifications already agreed.
All trademarks in this material are property of the respective companies. Danfoss and the Danfoss logotype are trademarks of Danfoss A/S. All rights reserved.

AX00000064en-US | 520L0585 • Rev 0401 • June 2016